LEESON®

THOUSANDS OF SOLUTIONS.
ONE MATCHED **PERFECTLY**
TO YOUR NEEDS.

PRODUCT CATALOGUE

ELECTRIC MOTORS, GEARMOTORS AND DRIVES
EFFECTIVE MARCH 2019

REGAL®

Grain Dryer/Centrifugal Fan Motor

IEC Brakemotor

Higher HP SST - All Stainless

What's New In This Catalogue

Additional Premium Efficiency Motors

Extended line of Stainless Steel Motors:

- Higher Horsepower Stainless Motors Ratings 3-10HP
- Stainless Steel Pedestal Fan Motors
- Stainless Steel 230/460V 3 Phase Brake Motors
- More Extreme Duck® Motors IP69K Ratings
- Extreme Duck Motors with Aegis®* Shaft Grounding Rings

Additional Crop/Grain Dryer Motors

Tobacco Barn Duty Fan Motors

High Cycle Brakemotors 230V 3 Phase

DC Explosion Proof Low Voltage Motors 12 & 24 volts

DC Washguard® Duty Motors 12 & 24 volts

Jet Pump Two Speed Single Phase Motors with Built-in Timer

PMAC Motors and Supporting Controls

Lincoln Hydraulic Elevator Duty Motors

What's Coming

- Additional Agriculture Fan and Drying Motors
- Extreme Duck® Ultra Motor 180-210T Frame
- Fire Pump Open Drip Motors
- Higher HP Stainless Steel Motors 250T-280T Frame
- Vertical Hollow Shaft Motors
- Washguard® Explosion Proof Motors

For a complete Terms & Conditions of Sale see the footer area on the home page www.regalbeloit.com

*Aegis is believed to be a trademark or trade name of Illinois Tool Works Inc. and is not owned or controlled by Regal Beloit Corporation.

Table Of Contents

New Product	Page Number
Agricultural Duty Motors	**120**
Eco AG® Motors / Premium Efficient 1-Phase	121
Extra High Torque 1-Phase	122
Fan Duty/Crop/Grain Dryer	126 & 131
Crop/Grain Dryer	125-127
Feed Auger Duty	129
High Torque 1-Phase	121 & 122
High Torque C-Face 1-Phase	122
Milk Transfer Pump	128
Pedestal Fan	130
Tobacco Barn Duty Fan Motors	127
Brakemotors	**163**
Brakemotor Kits	166 & 167
General Purpose	164
High Cycle Brakemotors	165
IEC Brakemotors	169
Wash Down Duty® Brakemotor Kits	167
Coupler Brake	168
Definite Purpose Motors	**152**
Compressor Duty	153 & 154
Elevator Duty	160-162
Instant Reversing	159
Pressure Washer Duty	155 & 156
Woodworking Duty	157 & 158
Explosion Proof Motors	**66**
Single Phase	68
Three Phase	69-71
General Purpose Motors	**14**
Single Phase Drip-Proof Motors	**15**
EcoSaver™ Motors	15
Resilient Base	21
Single Phase Totally Enclosed Motors	**22**
General Purpose TEFC Enclosure	23
TENV Enclosure	29
Single Phase C-Face Motors	
General Purpose - Drip-Proof	18-20
General Purpose - TEFC	26-29
Three Phase Drip-Proof Motors	**32**
General Purpose	33
C-Face	38
Compressor Duty	154
Resilient Base Mount	45
Three Phase Totally Enclosed Motors	**46**
General Purpose	**47**
C-Face	52
Compressor Duty	154
Resilient Base Mount	56
TENV Enclosure	56
HVAC / Fan Motors	**132**
Aeration Fan	125 & 140
Crop Dryer	125
Grain Dryer	126
Multi-Speed	144
Premium Efficient - 1-Phase	135
Resilient Base - 1-Phase	133
Resilient Base - 3-Phase	136
Split Phase	142
Two-Speed	139
Ventilation Fan	141
IEC / Metric Motors	**170**
IEC Frame AC, Three Phase	174-177
IEC Frame AC, Single Phase	177 & 178
IEC Flange Kits	179
IEC DC Metric	180 &181
IEC DC Flange Kits	182
Commercial Duty	185
IEC Brakemotors	169
Permanent Magnet AC	64
Permanent Magnet AC - Drives	65 & 253
Pump Motors	**72**
Carbonator Pump	78
EcoSaver™ Jet Pump Motor - 2 Speed - 1-Phase	78
Explosion Proof Jet Pump	74 & 76
Jet Pump - Single & Three Phase	73-76
JM Pump - ODP & TEFC	79 & 80
Wash Down Duty® Pump Motor	77
Special Voltage 50 Hz	**146**
50 Hz 1-Phase	147-149
50 Hz 3-Phase	149 & 150
Wash Down Duty® Motors	**82**
1-Phase - Epoxy Painted	85
3-Phase - Epoxy Painted	86 & 87
Brakemotors - Stainless Steel	165
DC Stainless	111 & 112
DC Washdown - Epoxy Painted	89 & 90
Extreme Duck® Ultra Encapsulated Stainless Motor	115 & 116
Extreme Duck Ultra Motor With Shaft Grounding Rings	117
Gearmotors - AC & DC Epoxy Painted	93-99
Premium Stainless 1 & 3-Phase	108-110
SST Stainless - 1 & 3-Phase	101-105
Stainless Steel Pedestal Fan	101
Washguard® Motor Brakekits™ Kits	88 &167
Washguard Motor Coupler Brakes	88
DC Motors	**186**
Commercial Duty Low Voltage	202
Explosion Proof	190
IEC / Metric	194
Low Voltage	198
Low Voltage Metric	200
NEMA® Frame SCR Rated	188 & 189
Stainless Wash Down Duty	203
SUB-FHP Low Voltage	201
SUB-FHP Wash Down Duty	193
Sub-Fractional HP	192
Wash Down Duty	191
Gearmotors	
DC Gearmotors	**206**
Parallel Shaft, OS300 - SCR & Low Voltage	212
Parallel Shaft, P1100	216
Parallel Shaft, P300 - SCR & Low Voltage	210
Parallel Shaft, P300 - Wash Down Duty® Motors	222
Parallel Shaft, PE350 - Wash Down Duty Motors	224
Parallel shaft, PE350, SCR & Low Voltage	214

NEMA is a trademark of National Electrical Manufacturers Association
and is not owned or controlled by Regal Beloit Corporation.

Table of Contents (cont'd)

Parallel Shaft, PZ SCR & Low Voltage	208
Right-Angle	218
Right-Angle, Wash Down Duty® Motors	226
AC Gearmotors	
Inverter Rated - PZ Series	240
Kits & Accessories	238 & 239
Parallel Shaft P240	230
Parallel Shaft PZ	228
Parallel Shaft, P1100	234
Parallel Shaft, P240 Wash Down Duty® Motors	231
Parallel Shaft, PE350	232
Right-Angle	236
Right-Angle Wash Down Duty Motors	237
AC & DC Controls	**242**
DC Drives	
DC Dual Mode	247
DC Low Voltage	246
DC PWM & Regenerative Drives	245
DC SCR Rated	244
DC Control Accessories	247
AC Drives	
Inverter Kits and Accessories	266
Micro Series NEMA® 1	248
Micro Series NEMA 4/12 & 4X	250
VSD Series	253
VSD Plus Series	255
SM Plus Series	262
SM Series	264
Vector Series NEMA 1	257
Vector Series NEMA 4/12	260
Motor Accessories / Kits	**279**
Blower Kits	283
C Flange Kits	279 & 280
Cast Iron Fan Guard / Severe Duty Kits	282
D Flange Kits	281
Drip-Cover Kits	282
Encoder Kits	284
Rodent Screen Kits	282
Shaft Grounding Kits	284
Slide Base / Transition Bases	286
Terminal Block Kits	285
Conduit Box Kits	285
Factory Options	**287**
General Information	
Technical Information	7 & 331
Cross References	290
Terms and Conditions	7
Index	308
Dimension Information	334
NEMA MG - 1 Table 12-12	341
Note Information	Inside Back Flap

New products and pricing are continually updated; for the latest real time product information, please refer to www.regalbeloit.com/Brands/LEESON.

GENERAL PURPOSE MOTORS
PAGES 14-62

AGRICULTURAL MOTORS
PAGES 120-128

HVAC MOTORS
PAGES 132-144

SPECIAL VOLTAGE
PAGES 146-150

DEFINITE PURPOSE
PAGES 152-162

BRAKE MOTORS
PAGES 163-169

GEARMOTORS
PAGE 206

IEC MOTORS
PAGES 170-185

DC MOTORS
PAGES 186-203

AC / DC CONTROLS
PAGES 242-277

NEMA is a trademark of National Electrical Manufacturers Association and is not owned or controlled by Regal Beloit Corporation.

RBiZ The brands you trust, at your fingertips

Open Order Reports
View all past orders (including tracking info, pricing, ship dates, invoices etc).

Access 24/7
On a secure website, any time, from anywhere. Find answers on your own schedule.

Place Orders in Real Time
Ship to any location, drop ship, specify ship date and more. Flexibility to ship order line by line or “complete”.

View specs & drawings
with “catalogue search” (available for certain brands only).

Multiple User Profiles
with 5 options for “level of access” to suit your individual needs.

Canada-Wide Inventory Search
Check price and availability live, and provide your customer with immediate answers. Search by catalogue numbers, partial numbers, or by item descriptions.

View Invoices & Payments
Find invoices by date, product, unpaid, and more! View online or export invoice and payment reports into excel format.

Register Now!
rbiz.regalbeloit.ca

THOUSANDS OF MOTOR AND CONTROL SOLUTIONS.

ONE MATCHED PERFECTLY TO YOUR NEEDS.

The LEESON® brand spans more than 6,000 stock AC and DC motors, gearmotors and variable-speed control solutions. All are built for rugged commercial and industrial applications. Whether you need thousands of motors for OEM applications or a single replacement motor, count on our twenty-nine stocking warehouses across Canada and the USA to get it there right when you need it. Whether you need a motor that withstands extreme temperatures, utilizes a unique mount or other requirement, we have solutions. Look to LEESON brand motors for innovative custom solutions, and personalized service through your local sales office.

To turn ideas into reality, contact your local Regal Canada sales office or visit **regalbeloit.com**

AC & DC MOTORS OF ALL TYPES

- Sub-fractional to 5,000 HP
- Permanent magnet AC & DC
- General purpose 1 & 3 phase
- Agricultural duty
- Explosion proof
- IEC metric motors
- Severe duty and IEEE841
- Washdown duty
- Inverter duty
- HVAC—fan motors
- AC & DC gearmotors
- Brakemotors
- Definite purpose motors
- Special voltage

ADJUSTABLE SPEED DRIVES

SCR, PWM, Regenerative & Low Voltage DC Controls

AC Control Families include:

Micro Series

- 115 volt, 230 volt and 460 volt input options
- 1/4 HP through 150 HP ratings
- IP20, IP31 & IP65 enclosure protection
- English readout display

SM & SM–Plus Series

- 115 volt, 230 volt and 460 volt input options
- 1/4 HP through 25 HP ratings
- IP20 enclosure protection
- Three digit LED display

SM2 & SM4 Vector Series

- 115 volt, 230 volt and 460 volt input options
- 1/3 HP through 60 HP ratings
- IP31 and IP65 enclosure protection
- Four digit LED display

VSD & VSD–Plus Series

- 230 volt and 460 volt input options
- 1/3 HP through 30 HP ratings
- IP20 enclosure protection
- Permanent magnet AC & induction AC motor capable

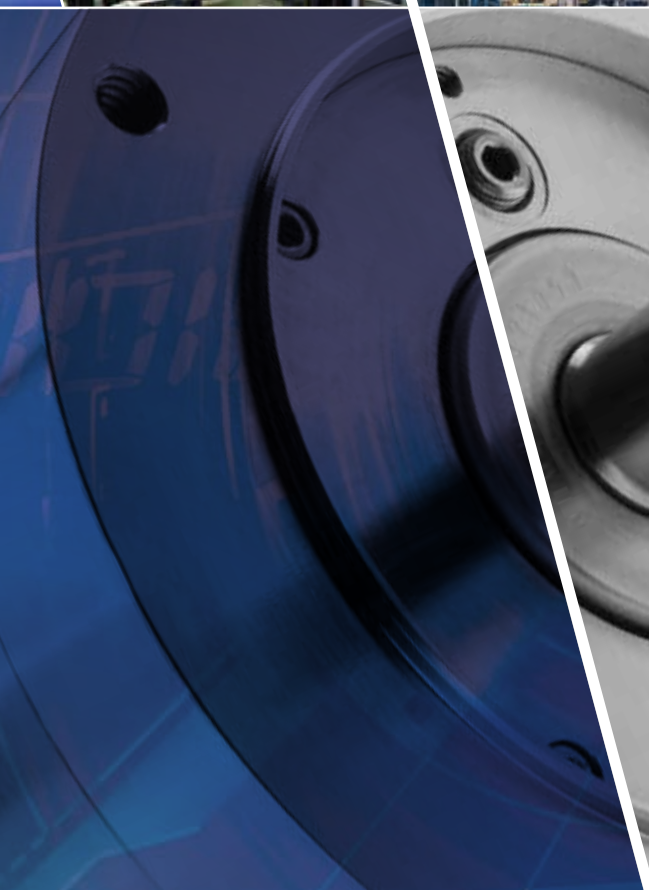

6 SALES OFFICES/WAREHOUSES ACROSS CANADA

- Mississauga, ON
- Hanover, ON (Manufacturing)
- Montreal, QC
- Edmonton, AB
- Vancouver, BC
- Winnipeg, MB

Technical Information
Application Information

AGENCY LISTINGS UL and CSA
LEESON® and Lincoln fire pump and explosion proof motors are UL Listed. Other motor types are UL recognized, including models with inherent overheating protection as noted (i.e. thermally protected models). LESSON and Lincoln motors are also CSA Certified for both explosion proof and non-explosion proof enclosures.

AC Motors
PMDC Motors + Gear Motors

Non-Explosion Proof	UL File No.	CSA File No.
NEMA® 25-449 Frame	E49747	LR2025
NEMA 500 and 5000 Frame	—	LR2025*
IEC 63-90 Frame	E49747	LR2025
IEC 100-280 Frame	E49747	LR2025#
Thermally Protected motors	E6312	LR2025
Insulation Systems	E37900	LR2025

* Does not include coverage for use with VFD
# Domestic product only

Explosion Proof	UL File No.	CSA File No.
NEMA 56-326 Frame	E12044	LR47504
NEMA 364-449 Frame	E12044	LR21839
Fire Pump Motors	**UL File No.**	**CSA File No.**
NEMA 143-510	EX5190	LR2025
Class I, Division 2/Zone	**UL File No.**	**CSA File No.**
NEMA 48-449 5000 Frame	—	LR21839
European ATEX Zone 2	**Intertek Certificate No..**	
NEMA 143-449, IEC 112-280	ITS06ATEX45370	

Cast iron frame designs only

Non-Explosion Proof	UL File No.	CSA File No.
NEMA 25-145	E49747	LR2025
AC Inverters	E161242	#
SpeedMaster SCR Controls	E132235	LR41380
FHP Speed Drives	E132235	_

- UL Certified for Canada under UL File E 1.67242

ATmospheres EXplosibles (ATEX Directive)
Mandatory by law, the European Union (EU) directive 94/9/EC requires that electric motors for use in explosive atmospheres carry the CE mark, notified body identifier, Ex symbol, equipment group and category, plus the date code. See "European Installations" for additional details, located on the next page.

National Electrical Manufacturers Association (NEMA®)
LEESON and Lincoln motors are manufactured in accordance with all applicable areas of NEMA standards in MG1-2006. When applied in accordance with the "Guidelines for Application of three phase motors on variable frequency drives", **LEESON and Lincoln motors are in full compliance with NEMA MG1-2006, Part 31, Section 4.4.2,** as pertaining to voltage spikes. 460 volt motors must withstand voltage spikes of up to 1426 volts; 575 volt motors must withstand spikes up to 1788 volts. See "Insulation Systems" for additional detail on this subject.
Website: www.nema.org

Commitment to RoHS and WEEE European Directives
European directive 2011/65/EU "Restriction of Use of Certain Hazardous Substances" (RoHS) and Directive 2012/19/EU "Directives on Waste Electrical and Electronic Equipment" (WEEE) were enacted to control the amount of certain hazardous substances contained in products shipped into the E.U. Restricted substances include lead, mercury, cadmium, hexavalent chromium, polybrominated biphenyls and polybrominated dipheynl ethers.

The scope of products covered, affecting motors, is:
- Large household appliances
- Small household appliances
- IT and telecommunications equipment
- Consumer equipment
- Electrical and electronic tools (except large scale stationary and industrial tools)
- Toys, leisure and sports equipment
- Automatic dispensers

The directives do not currently apply to medical devices, monitoring and control instruments, spare parts for the repair or reuse of electrical and electronic equipment placed on the market before July 1, 2006, and most military and state security equipment.

Regal worked closely with suppliers to assure that product falling within the scope of these directives meets the specified levels of these substances. The directives took affect July 1st, 2006 however many products were converted in May and June. The products converted are motors in NEMA frame size 145 and below, both AC and DC motors with the following exceptions:

- Brakemotors in 56-145 frame **will have to be ordered specifically as RoHS compliant.**
- Some motors with specialty electro-mechanical components.

ISO QUALITY CERTIFICATION
Hanover, ON. manufacturing plant is ISO 9001:2008. The certificate number is US008209-1W.

TERMS AND CONDITIONS
To view our complete set of Terms & Conditions visit rbiz.regalbeloit.ca
Terms & Conditions listed in the footer section.

NEMA is a trademark of National Electrical Manufacturers Association and is not owned or controlled by Regal Beloit Corporation.

LEESON® motors employ the use of Exxon POLYREX®* EM grease, a specially formulated bearing grease designed for electric motors. POLYREX EM grease provides superior lubricity, durability and resists corrosion, rust and washout.

Maximum safe mechanical speed capability is a function of bearing size, type and grease selection, as well as rotor balance specifications. Consult the "Maximum Safe Mechanical Speed Limits" chart in the "Overspeed Capability" section.

Note that these values do not imply maximum constant horsepower RPM.

EFFICIENCY

The efficiency of a motor is the ratio of its useful power output to its total power input and is usually expressed in a percentage. LEESON motors are available with standard, high efficient EPAct, and **NEMA Premium®** efficient ratings. Standard efficiency motors may only be used on applications that are exempt from legislated efficiencies. The high efficient motor line is in compliance with the Energy Policy Act of 1992 (EPAct) and/or Canadian efficiencies as set by NRCan. The Energy Independence and Security Act of 2007 **(EISA07)** has become a law on December 19, 2010, requiring current EPAct-compliant motors to meet NEMA Premium efficiencies, and most EPAct-exempt motors to meet EPAct levels. Premium efficient motors in this catalogue meet NEMA Premium unless otherwise noted.

The WattSAVER®e motor line is a premium efficiency line, which exceeds mandated efficiencies of EPAct and / or NRCan. Unless otherwise noted, premium efficient motors in this catalogue meet NEMA Premium, the newly promoted efficiency levels by NEMA, NRCan and the Consortium for Energy Efficiency (CEE).

ELECTRICAL TYPE/STARTING METHOD

Motors in this catalogue are capacitor start, split phase, permanent split capacitor, or three phase. Capacitor Start motors have high starting torque, high breakdown torque, and relatively low starting current. Split phase motors have medium starting torque and medium starting current. Permanent split capacitor motors have low starting torque and low starting current. Three phase motors have high starting, extra breakdown torque, and typically very low starting current. Single phase motors cannot be applied on variable frequency drives with three phase output.

ENCLOSURE AND METHOD OF COOLING

Regal offers LEESON® motors available in various enclosures: Dripproof (DP), Dripproof Force Ventilated (DPFV), Totally Enclosed Fan Cooled (TEFC), Totally Enclosed Non-Ventilated (TENV), Totally Enclosed (TEAO) and Totally Enclosed Blower Cooled (TEBC).Application conditions will determine the type of motor enclosure required.

Dripproof motors have open enclosures and are suitable for indoor use and in relatively clean atmospheres. Dripproof motors have ventilating openings constructed so that drops of liquid or solid particles falling on the machine at an angle of not greater than 15 degrees from the vertical cannot enter the machine.

Totally enclosed motors are suitable for use in humid environments or dusty, contaminated atmospheres. Totally enclosed non-ventilated motors are NOT cooled by external means. Totally enclosed fan cooled motors are cooled by external means that are part of the motor but not in the internal workings of the motor. Totally enclosed air over motors are sufficiently cooled by external means, provided by the customer.

HAZARDOUS DUTY® MOTORS

Hazardous Duty motors are totally enclosed (fan cooled or non-ventilated) motors designed for applications in hazardous atmospheres containing explosive gases and/or combustible dusts.

NORTH AMERICAN INSTALLATIONS

North American standards for electric motors generally fall into one of two divisions. Division 1 Explosion Proof motors are UL Listed in accordance with NFPA Class I (Flammable Gases) or Class II (Combustible Dusts) and Groups (gases or dusts), depending upon the atmosphere. Division 2 motors are CSA Certified and are marked similarly to Division 1 equipment. Inverter Duty motors through 449T frames are CSA Certified for use in Division 2 locations.

EUROPEAN INSTALLATIONS

Motors for hazardous locations in Europe must meet a different set of standards and require different markings than those of North America. CENELEC sets the standards for equipment in hazardous locations for Europe. Motors for use in explosive atmospheres in Europe are often referred to as flameproof (Zone 1) or non-sparking (Zone 2) motors. These motors must comply with the ATEX Directive. The ATEX Directive covers all electrical equipment used in explosive atmospheres. To ensure compliance with the Directive, equipment must meet the essential ATEX requirements and carry the CE mark on the nameplate. Other information required on the nameplate includes the Ex symbol, group & category, Ex protection method, gas group, and temperature code, example (Ex II 3 G Ex nA IIC T3).

The tables on the next page describe LEESON motor capabilities by area classification and by temperature code.

*Exxon and Polyrex are trademarks of Exxon Mobil Corporation and are not owned or controlled by Regal Beloit Corporation.

NEMA and NEMA Premium are trademarks of National Electrical Manufacturers Association and are not owned or controlled by Regal Beloit Corporation.

Technical Information

Application Information

LEESON® Hazardous Duty® Motor Area Classification Chart

CLASS I AREA CLASSIFICATION (Flammable Gases, Vapors or Mists)				CLASS II AREA CLASSIFICATION (Combustible Dusts)			
NORTH AMERICA		EUROPE - ATEX ③ (Category G - Gases)		NORTH AMERICA		EUROPE - ATEX ③ (Category D - Dusts)	
Division 1 Explosion Proof	**Division 2 TEFC & TENV**	**Zone 1 Flameproof**	**Zone 2 Non-Sparking**	**Division 1 Explosion Proof**	**Division 2**	**Zone 21 Flameproof**	**Zone 22 Non-Sparking**
Group A ①	Group A	N/A	N/A	-	-	-	-
Group B ②	Group B	N/A	N/A	-	-	-	-
Group C	Group C	N/A	N/A	-	-	-	-
Group D	Group D	N/A	N/A	-	-	-	-
-	-	N/A	-	Group E ①	-	N/A	N/A
-	-	N/A	-	Group F	Group F ①	N/A	N/A
-	-	N/A	-	Group G	Group F ①	N/A	N/A

- Group is not applicable to that Division or Zone, or is not defined.
① Group is not available as LEESON motors.
② Contact factory representative for availability.
③ Please contact your local LEESON motors sales office for ATEX certification.

LEESON Hazardous Duty Motor Temperature Code Chart

TEMPERATURE CODES			DIVISION 1 EXPLOSION PROOF/FLAMEPROOF		DIVISION 2/ZONE 2 NON-SPARKING
			CLASS I AREA CLASSIFICATION (Flammable Gases, Vapors or Mists)	CLASS II AREA CLASSIFICATION* (Combustible Dusts)	CLASS I AREA CLASSIFICATION (Flammable Gases, Vapors or Mists)
Temp.	**UL/CSA**	**ATEX**	**Division 1/ Zone 1**	**Division 1/ Zone 21**	**Division 2/ Zone 2**
280°C	T2A	T2(280)	Explosion Proof - Class I, Group D (Group C as noted)		
260°C	T2B	T2(260)			Severe Duty & IEEE-841 @ 1.15 S.F., Class I, Groups A,B,C,D (Sine wave power)
215°C	T2D	T2(215)			
200°C	T3	T3			
165°C	T3B	T3(165)	Explosion Proof - Class I, Group D (Group C as noted) Sine wave or PWM power	Explosion Proof - Class II, Groups F & G, Sine wave or PWM power	
160°C	T3C	T3(160)			
135°C	T4	T4			

* Class II, Division 2 motors are not available as LEESON motors.
Division I & II ambient range is -25°C to +40°C

*Inpro/Seal and VBX are believed to be the trademarks or trade names of INPRO/SEAL LLC and are not controlled by Regal Beloit Corporation.

Technical Information

Application Information and Variable Speed Operation

Guidelines for application of general purpose, three phase motors on variable frequency drives to meet NEMA® MG - 2006 Part 30 and Part 31, Section 4.4.2.
Unless stated otherwise, motor nameplates do NOT include listed speed range.

ENCLOSURE	EFFICIENCY	VARIABLE TORQUE	CONSTANT TORQUE								
		ALL FRAMES	56	143-215		254-286		324-365		404-449	
NEMA Motors		ALL POLES	ALL POLES	2-Pole	4 & 6 Pole	2-Pole	4 & 6 Pole	2-Pole	4 & 6 Pole	2-Pole	4 & 6 Pole
ODP	Standard (EPAct exempt)	10:1	2:1	2:1	2:1	Contact Engineering					
	EPAct compliant	10:1	n/a	10:1	2:1	2:1	2:1	Contact Engineering			
	NEMA Premium®	10:1	n/a	10:1	10:1	10:1	10:1				
TEFC	Standard (EPAct exempt)	10:1	2:1	2:1	2:1	Contact Engineering					
	EPAct compliant	10:1	n/a	2:1	10:1	2:1	10:1	2:1	2:1	2:1	2:1
	NEMA Premium	10:1	n/a	2:1	20:1	2:1	20:1	2:1	20:1	2:1	20:1
TENV	EPAct compliant	10:1	n/a	1000:1	1000:1	1000:1	1000:1	1000:1	1000:1	1000:1	1000:1
	NEMA Premium	10:1	1000:1	1000:1	1000:1	1000:1	1000:1	1000:1	1000:1	1000:1	1000:1
Washdown TEFC	Standard (EPAct exempt)	10:1	10:1 (2)	10:1 (2)	10:1 (2)	n/a	n/a	n/a	n/a	n/a	n/a
	EPAct compliant	10:1	10:1 (2)	10:1 (2)	10:1 (2)	n/a	n/a	n/a	n/a	n/a	n/a
	NEMA Premium	10:1	10:1 (2)	10:1 (2)	10:1 (2)	n/a	n/a	n/a	n/a	n/a	n/a
Washdown TENV	Standard (EPAct exempt)	10:1	1000:1	1000:1	1000:1	n/a	n/a	n/a	n/a	n/a	n/a
	EPAct compliant	10:1	1000:1	1000:1	1000:1	n/a	n/a	n/a	n/a	n/a	n/a
	NEMA Premium	10:1	1000:1	1000:1	1000:1	n/a	n/a	n/a	n/a	n/a	n/a
Explosion Proof	All efficiency levels	Explosion proof motors must be properly nameplated with inverter duty information prior to use on VFD. Motors with automatic overload protectors cannot be used on VFDs.									
IEC Motors		ALL FRAMES	63-90		100-225		250-315				
All enclosures	All efficiency levels	10:1	20:1		Up to 20:1		Up to 2:1				

Note (2) - Washdown TEFC motors are rated for 10:1 C.T. 60 minute duty or 2:1 C.T. continuous duty at lowest RPM

280 frame and higher - TEFC -280-360 frame- 2:1 constant torque
400 frame and higher - Contact local sales office
Stock 90 VDC and 180 VDC motors 30:1 of rated torque

APPLICATION NOTES

Bearing currents: Regal recommends that any motors used with variable frequency drives be equipped with suitable means to protect the motor bearings from shaft currents caused by common mode voltages inherent with operation on a non-sinusoidal power supply. Regal offers several options for motors in non-classified (non-hazardous) locations, including ground brushes, insulated bearings and non-contact shaft grounding rings. For more information on ground brushes and bearing currents, see the VARIABLE SPEED OPERATION section. For installation cost and available options contact your local sales office.

Restricted use: DO NOT APPLY THE FOLLOWING MOTORS ON VARIABLE FREQUENCY DRIVES:

Single phase motors: motors with inherent overload protection, multi-speed motors, motors with 1.0 service factor on sine wave power. Fire pump motors should not be used with variable frequency power supplies, due to the critical nature of these applications.

Hazardous locations: Consult with your sales representative or contractor when applying motors and drives into hazardous locations, either Division/Zone 1 or Division/Zone 2 areas. UL and CSA policies prohibit the installation of bearing protection devices, such as shaft grounding brushes, rings or insulated bearings on motors in hazardous locations.

STANDARD MOTOR INSULATION SYSTEMS

Standard Motor Insulation Systems
IRIS® Insulation System
All LEESON 3-Phase motors 1HP and above
All LEESON premium efficient motors
All LEESON inverter duty motors

Maximum Cable Lengths from the Motor to Drive

PRODUCT DESCRIPTION	3 kHz CARRIER FREQUENCY (PHASE TO PHASE)*		
	230 VOLT	460 VOLT	575 VOLT
56-326 NEMA, 100-225 IEC frames	600 ft.	125 ft.	40 ft.
364-5013 NEMA, 250-315 IEC frames	1000 ft.	225 ft.	60 ft.
Motors with corona resistant magnet wire	1500 ft.	475 ft.	140 ft.
Motors with IRIS® or Spike Defense™ insulation	Unlimited	Unlimited	650 ft.
Form-wound low voltage motors	Unlimited	Unlimited	650 ft.

* Higher carrier frequencies require shorter cable length to obtain normal (50Khrs) insulation life.

NEMA and NEMA Premium are trademarks of National Electrical Manufacturers Association and are not owned or controlled by Regal Beloit Corporation.

Technical Information

Application Information

VARIABLE SPEED INFORMATION

LEESON® motors, unless otherwise stated, are rated for continuous operation in a 40°C ambient and for altitudes up to 3300 feet (1000 meters) above sea level. Special application considerations, such as high or low ambient, intermittent ratings, high altitude, duty cycle rated, extended constant horsepower range, special base speed, voltage or frequency, or any other special requirements, should be reviewed by a factory representative.

It is the responsibility of the startup personnel during commissioning of the VFD/motor system to properly tune the drive to the motor for the specific application. The correct voltage boost and volts/hertz settings are application dependent and unique to each motor design. Procedures for these adjustments should be in your VFD user manual.
Many vector duty and inverter duty motors in this catalogue are equipped with thermostats; warranty coverage may be denied if they are not properly utilized.

⚠ WARNING

- Power factor correction capacitors should never be installed between the drive and the motor. Failure to follow these instructions could result in damage to equipment or personal injury.

INVERTER DUTY OR INVERTER RATED

"Inverter Duty" (often called "Inverter Rated") motors are suitable for use with Variable Frequency Drives, as long as operation is within the application guidelines published in this catalogue. In general, LEESON three phase, general purpose, NEMA® Design B motors are considered "Inverter Duty", and meet or exceed the requirements of NEMA MG1, Part 30. As required under Federal law, these motors comply with EISA2007 efficiencies when operating from utility power.

Inverter Duty (Rated) motors are most often used in 10:1 speed range, variable torque or constant torque applications. A vector control is usually required for operation beyond 10:1 CT.

Additional detail regarding a specific product's capabilities is available on its catalogue page, or by consulting your application engineer.

VECTOR DUTY

"Vector Duty" describes a class of motors that are used in conjunction with open-loop (without encoder) or closed-loop (with encoder) vector controls, that provide enhanced performance under low speed operating conditions, or in cases where torque (rather than speed) must be controlled. "Vector Duty" motors can be applied to volts/hertz (scalar) drives, as well.

LEESON Vector Duty motors have been specifically designed for optimal operation on vector or volts/hertz controls. These motors feature a wide constant torque (up to 2000:1) and/or constant horsepower (up to 4:1) speed range and are performance-matched to all current technology IGBT drives. Vector Duty motors meet or exceed the requirements of NEMA MG1, Part 31 and are equipped with an IRIS® or Ultimate Spike Defense™ enhanced insulation system to provide many years of trouble-free service. Consult the catalogue page for each product's capabilities and features. As these motors are specifically designed for operation through an inverter, they are exempt from EISA2007.

VARIABLE TORQUE LOADS

Applications include fans, blowers and centrifugal pumps. Torque varies as the square of the speed, and horsepower as the cube of the speed. Operation below base speed significantly lightens the load on the motor. While most variable torque applications do not require the motor to operate below half speed, the motor is fully capable of operation to zero speed. Operation above base speed significantly adds to the load on the motor; therefore, a factory representative must review applications requiring variable torque above base speed. Refer to the application chart found on page 9 for use of general purpose three phase motors on variable frequency drives. A bypass circuit is often employed in variable torque applications. If this device is intended to be used, selection of a NEMA Design B motor is recommended, to withstand the inrush current during across-the-line starting.

CONSTANT TORQUE LOADS

Applications include conveyors, elevators, hoists, extruders, positive displacement pumps, mixers and converting equipment. Torque remains constant throughout the range of operation, and extra care should be taken in the proper application of motors, especially at very low speeds. Most constant torque applications don't require operation below 10:1 (i.e. 6 Hz operation on a 60 Hz motor),but an increasing number of applications historically reserved for servo and/or stepper systems are being served with motors capable of operation beyond 20:1…even up to 2000:1 (zero speed, constant torque). Refer to the application chart found on page 9 for use of general purpose three phase motors on variable frequency drives.

Applications requiring greater than 20:1 C.T. are ideal for LEESON Inverter Duty/Vector Duty motors. These motors provide full rated torque within their listed speed range, without exceeding a Class F temperature rating while under inverter power (many operate at Class B). Ratings in this catalogue have been developed, based on extensive testing on IGBT inverters, set at a minimum 3 KHz (or equivalent) carrier frequency.

LEESON Vector Duty and Inverter Duty motors are designed for operation at 150% of rated load for one minute, up to the base speed of the motor (overload capability declines to 100% as the motor reaches maximum constant HP speed). These motors accommodate constant horsepower operation to 1-1/2 to 2 times base speed, subject to the motor's maximum safe mechanical speed limit. Refer to the maximum safe mechanical speed chart, as well as the performance section for each motor's capability.

Motors rated for zero RPM continuous duty (1000:1 or 2000:1) must be powered by vector drives to produce rated torque without overheating. Optimum zero speed and low-speed full torque performance may require a closed-loop vector drive (with encoder feedback).

Continued on next page.

NEMA is a trademark of National Electrical Manufacturers Association and is not owned or controlled by Regal Beloit Corporation.

CONSTANT HORSEPOWER LOADS

Applications include coil winders, band saws, grinders, and turret lathes. Operation requires the motor to deliver the same horsepower rating, regardless of shaft speed. Torque increases at low speed and decreases at higher speed. Most general purpose motors can deliver constant horsepower up to 1 1/2 times base speed (consult a factory representative to verify performance). However, many constant HP applications require operation to twice base speed, and some, such as coil winders, up to 4 times base speed.

MOTOR GROUNDING

Frames and accessories of all motors must be grounded in accordance with the National Electric Code (NEC) Article 430. Refer to NEC Article 250 for general information on grounding. Proper grounding of inverter-driven motors is essential to protect personnel and livestock from inverter-sourced common mode voltages, which may reach hazardous levels on the frame of ungrounded or poorly grounded motors.

LOW INPUT VOLTAGE

If, due to lower utility supply voltage, the input voltage from the VFD to the motor is lower than the motor's rated voltage, de-rating of the motor's base frequency, horsepower, full load RPM, and constant HP RPM is required. The revised values can be calculated by multiplying by the ratio of the voltage change. For example, to operate a 460 volt motor from an inverter fed by 50 or 60 HZ, 400 volt utility power, the multiplier is 400/460 or 0.87.

The VFD can be reprogrammed to match the new base point values, allowing the motor to provide rated torque at rated current from the new base speed down to its original minimum Constant torque speed. The motor's CHP range will begin at the new base frequency and will be shortened by the same ratio as described above.

OVERSPEED CAPABILITY

Maximum safe mechanical speed capability is a function of bearing size and type, lubrication, rotor balancing technique and specifications, air gap, enclosure, frame construction and connection to the driven load. In addition, consideration must be given to ambient noise levels, as operation above base speed will increase motor noise and vibration, and reduce bearing life. Under no circumstances should bearing hub temperature exceed 100° C. Belted loads should not exceed 60 Hz operating RPM by more than 25% (NEMA® "TS" shafts are not suitable for belted loads). Due to external cooling fans, TEFC (and Explosion Proof Fan Cooled) motors are limited to 4000 RPM maximum speed.

Maximum Safe Mechanical Speed Limits
(ODP, TENV, DPFV OR TEBC ENCLOSURES)
60 Hz base frequency

Frame Size	2-Pole	4, 6 or 8-Pole
56-184	7200	5400
213-256	5400	4200
284-286	5400	3600
324-326	4000	3600
364-365	4000	2800
404-449	3600	2800
5000 Fr	N/A	CALL
6800 Fr	N/A	CALL

NEMA is a trademark of National Electrical Manufacturers Association and is not owned or controlled by Regal Beloit Corporation.

Technical Information

Variable Speed Operation

OTHER APPLICATION CONSIDERATIONS

For proper selection, the following should be considered:

- Horsepower or torque requirements at various speeds.
- Desired speed range of the load and motor.
- Acceleration and deceleration rate requirements of the process being controlled.
- Starting requirements including the frequency of starting and a description of the load (reflected inertia at the motor, load torque during starting).
- Whether the application is a continuous process or duty cycle of starts, stops and speed changes.
- A general description of the type of application including the environment in which the VFD system components must operate (determines motor enclosure and/or explosion proof classification).
- Description of the available electrical power supply and wiring.
- Special performance requirements, if any.
- Whether the drive will be configured with a by-pass circuit. In case of its deployment, the motor will operate like its fixed speed counterpart and may require a NEMA® B design which limits in-rush current, or selection of a larger motor starter or other protective circuitry.
- Load sharing
- Mounting and other mechanical considerations.

Typical Temperature Rise Of Various Enclosures

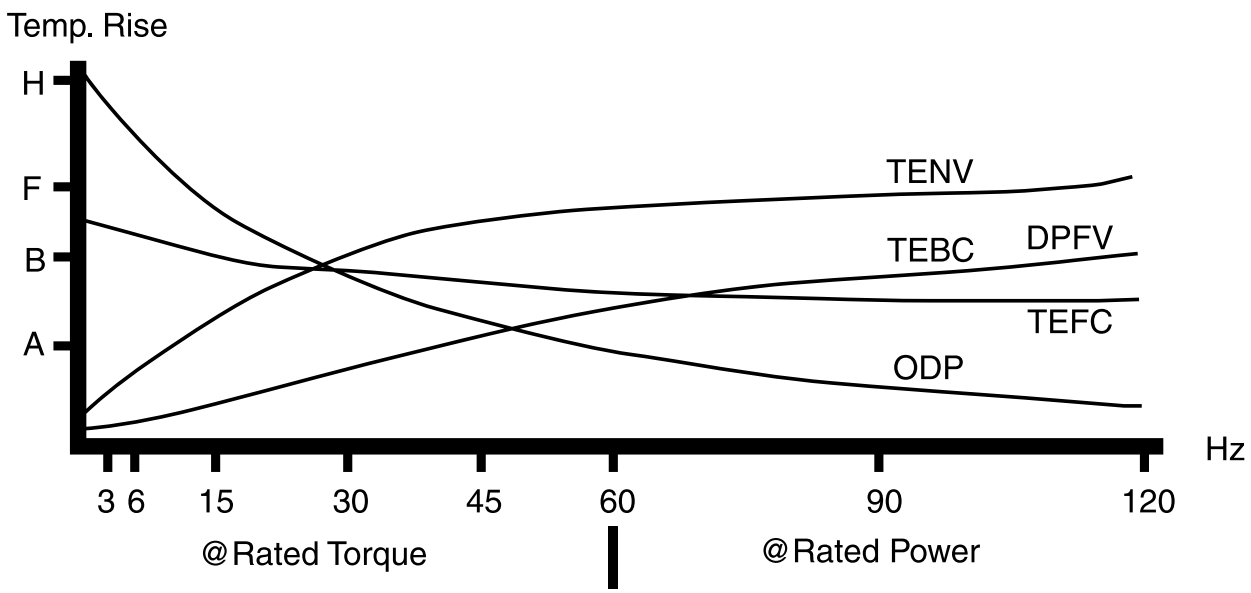

NEMA is a trademark of National Electrical Manufacturers Association and is not owned or controlled by Regal Beloit Corporation.

LEESON MOTOR MODEL NUMBER NOMENCLATURE

All Regal® LEESON motors, both stock and custom, have a catalogue number and a model number. The model number appears on the motor's nameplate and describes pertinent electrical and mechanical features of the motor. An example follows along with a listing of the various letters and positions used.

POSITION 1: U.L. PREFIX

A = Auto protector. UL recognized for locked rotor plus run, also recognized construction (UL 1004)*.
M = Manual protector. UL recognized for locked rotor plus run, also recognized construction (UL 1004)*.
C = Component recognition. (UL 1004) No protector.
U = Auto protector. UL recognized construction (UL1004).
Motor/protector combination not UL recognized.
P = Manual protector. UL recognized construction (UL1004).
Motor/protector combination not UL recognized.
T = Thermostat, not UL recognized.
N = No overload protection.

*This applies only to 48, S56, and 56 frame designs through 1 HP, Open & TENV.

POSITION 2: FRAME

4 = 48 Frame	24 = 24 Frame	40 = 40 Frame
6 = 56 Frame	25 = 25 Frame	43 = 43 Frame
42= 42 Frame	30 = 30 Frame	44 = 44 Frame
143 = 143T Frame	31 = 31 Frame	
145 = 145T Frame	32 = 32 Frame	
182 = 182T Frame	34 = 34 Frame	
184 = 184T Frame	38 = 38 Frame	
213 = 213T Frame		
215 = 215T Frame		
254 = 254T Frame		
256 = 256T Frame		
284 = 284T Frame		
286 = 286T Frame		
324 = 324T Frame		
326 = 326T Frame		
364 = 364T Frame		
365 = 365T Frame		
404 = 404T Frame		
405 = 405T Frame		
444 = 444T Frame		
447 = 447T Frame		
449 = 449T Frame		

POSITION 3: MOTOR TYPE

C =Cap. Start/Ind. Run	T =Three Phase
D =Direct Current	B =Brushless DC
K =Cap. Start/Cap. Run	H =Inverter Rated/IEEE841
P =Permanent Split	S =Split Phase

Odd frequencies other than 50 Hz show synchronous speed code. DC and special motors may have one, two, or three digits indicating motor speed rounded to the nearest hundred RPM.

EXAMPLE:

Position No.	1	2	3	4	5	6	7	8
Sample Model No.	A	4	C	17	D	B	1	A

POSITION 4: RPM

RPM-Single Speed	RPM-Multi-Speed
34 = 3450 RPM 60 Hz 2 Pole	24 = 2 and 4 Poles
28 = 2850 RPM 50 Hz 2 Pole	26 = 2 and 6 Poles
17 = 1725 RPM 60 Hz 4 Pole	28 = 2 and 8 Poles
14 = 1425 RPM 50 Hz 4 Pole	212 = 2 and 12 Poles
11 = 1140 RPM 60 Hz 6 Pole	46 = 4 and 6 Poles
9 = 950 RPM 50 Hz 6 Pole	48 = 4 and 8 Poles
8 = 960 RPM 60 Hz 8 Pole	410 = 4 and 10 Poles
7 = 720 RPM 50 Hz 8 Pole	412 = 4 and 12 Poles
7 = 795 RPM 60 Hz 10 Pole	68 = 6 and 8 Poles
6 = 580 RPM 50 Hz 10 Pole	
6 = 580 RPM 60 Hz 12 Pole	

POSITION 5: ENCLOSURE

D = Drip-Proof
E = Explosion-Proof TENV
F = Fan Cooled
N = TENV
O = Open
S = Splashproof
W = Weatherproof, Severe Duty, Chemical Duty, WASHGUARD® - TEFC
X = Explosion-Proof TEFC
V = Weatherproof, Severe Duty, Chemical Duty, WASHGUARD - TENV

POSITION 6: MOUNTING

B = Rigid base standard
C = "C" face - no base - NEMA®
D = "D" flange - no base - NEMA
H = 48 frame - 56 frame mounting/shaft rigid
J = 48 frame - 56 frame mounting/shaft resilient
K = Rigid mount with "C" flange
M = Motor parts - rotor and stator
R = Resilient base
S = Shell motor
T = Round body
Z = Special mounting

POSITION 7: SEQUENCE NUMBER

Number assigned as required when new designs with new characteristics are needed.

POSITION 8: MODIFICATION LETTER

Major modification letter. Used when revisions made in existing model will affect service parts.

NEMA is a trademark of National Electrical Manufacturers Association and is not owned or controlled by Regal Beloit Corporation.

Single Phase ODP Motors

Single Phase Motors – General Purpose – Drip-Proof – 115/208-230V
Rigid Mount – 1/4 HP – 10 HP – Frame sizes - 48 – 215T
C Face Mount – 1/4 HP – 7 1/2 HP – Frame sizes 56C – 215TC
Resilient Base Mount – 1/4 HP – 2 HP – Frame sizes – 48 – 56

- Durable rolled steel construction
- NEMA® design B performance
- Meets or exceeds NEMA service factors
- Double shielded ball bearings
- Continuous duty
- Thermally protected ratings
- UL recognized component listing and CSA certified

Applications:
For use where water and dust exposure is minimal. Ideally suited for use on pumps, compressors, blowers, fans and other standard industrial applications

NEMA is a trademark of National Electrical Manufacturers Association and is not owned or controlled by Regal Beloit Corporation.

Single Phase – Drip-Proof – Rigid Base

HP	SYN RPM 60 Hz	NEMA® Frame	Catalogue Number	Availability	Model Number	App. Wgt. (lbs)	Voltage	Over-load Prot.	F. L. Amps @ 230 V	Service Factor	"C" Dim. (Inches)	♥Notes
1/4	1800	48	**101423.00**	D	M4C17DB33	16	115/208-230	Man.	2.7	1.35	8.87	S, MX
1/4	1800	48	**E101423.00**	√	M4K17DB13	19	115/208-230	Man.	1.2	1.35	10.37	S, MX, 53
1/4	1800	48	**100115.00**	D	A4C17DB1	16	115/208-230	Auto.	2.7	1.35	8.87	S, MX
1/4	1800	48	**E100115.00**	√	A4K17D11A	16	115/208-230	Auto.	1.2	1.35	10.12	S, MX, 53
1/4	1800	S56	**100000.00**	D	A4C17DH1	17	115/208-230	Auto.	2.7	1.35	9.24	S, MX
1/4	1800	S56	**E100000.00**	√	A4K17DH17	20	115/208-230	Auto.	1.2	1.35	10.49	S, MX, 53
1/3	3600	S56	**100336.00**	D	C4C34DH11	26	115/208-230	None	2.8	1.35	8.99	S, MX
1/3	3600	S56	**E100336.00**	√	C4K34DH6	29	115/208-230	None	1.5	1.35	10.49	S, MX, 53
1/3	1800	48	**100116.00**	D	A4C17DB2	17	115/208-230	Auto.	3.3	1.35	8.87	S, MX
1/3	1800	48	**E100116.00**	√	A4K17DB12	16	115/208-230	Auto.	1.9	1.35	10.62	S, MX, 53
1/3	1800	S56	**E100006.00**	√	C4K17DH5	19	115/208-230	None	1.9	1.35	10.99	S, MX, 53
1/3	1800	S56	**100588.00**	D	M4C17DH46	18	115/208-230	Man.	3.3	1.35	9.24	S, MX
1/3	1800	S56	**E100588.00**	√	M4K17DH17	21	115/208-230	Man.	1.9	1.35	10.99	S, MX, 53
1/3	1800	S56	**100001.00**	D	A4C17DH2	18	115/208-230	Auto.	3.3	1.35	9.24	S, MX
1/3	1800	S56	**E100001.00**	√	A4K17DH8	16	115/208-230	Auto.	1.9	1.35	10.99	S, MX, 53
1/3	1200	S56	**E104018.00**	√	C4K11DH1	32	115/208-230	None	1.7	1.35	11.99	S, MX, 53
1/2	3600	48	**E100184.00**	√	C4K34DB1	29	115/208-230	None	2.2	1.25	10.37	S, MX, 53
1/2	3600	S56	**100337.00**	D	C4C34DH12	20	115/208-230	None	3.4	1.25	9.99	S,MX
1/2	3600	S56	**E100337.00**	√	C4K34DH5	21	115/208-230	None	2.2	1.25	10.99	S, MX, 53
1/2	3600	S56	**100052.00**	D	M4C34DH2	21	115/208-230	Man.	3.4	1.25	9.99	S, MX
1/2	3600	S56	**E100052.00**	√	M4K34DH12	19	115/208-230	Man.	2.2	1.25	10.99	S, MX, 53
1/2	1800	48	**100338.00**	D	C4C17DB12	20	115/208-230	None	4.4	1.25	9.62	S,MX
1/2	1800	48	**E100338.00**	√	C4K17DB5	30	115/208-230	None	2.3	1.25	11.12	S, MX, 53
1/2	1800	S56	**100007.00**	D	C4C17DH8	21	115/208-230	None	4.4	1.25	9.99	S,MX
1/2	1800	S56	**E100007.00**	√	C4K17DH6	30	115/208-230	None	2.3	1.25	11.49	S, MX, 53
1/2	1800	S56	**100004.00**	D	M4C17DH5	21	115/208-230	Man.	4.4	1.25	9.99	S, MX
1/2	1800	S56	**E100004.00**	√	M4K17DH21	23	115/208-230	Man.	2.3	1.25	11.49	S, MX, 53
1/2	1800	S56	**100002.00**	D	A4C17DH3	20	115/208-230	Auto.	4.4	1.25	9.99	S, MX
1/2	1800	S56	**E100002.00**	√	A4K17DH19	23	115/208-230	Auto.	2.3	1.25	11.49	S, MX, 53
1/2	1200	56	**E110002.00**	√	C6K11DB5	33	115/208-230	None	2.6	1.25	12.37	S, MX, 53
3/4	3600	S56	**E100340.00**	√	C4K34DH4	31	115/208-230	None	3.6	1.25	11.49	S, MX, 53
3/4	3600	S56	**E100053.00**	√	M4K34DH13	28	115/208-230	Man.	3.6	1.25	11.49	S, MX, 53
3/4	1800	S56	**100008.00**	D	C4C17DH9	26	115/208-230	None	5.4	1.25	10.99	S,MX
3/4	1800	56	**E119348.00**	√	C6K17DB51	27	115/208-230	None	3.3	1.25	13.15	S, MX, 53
3/4	1800	56	**E119855.00**	√	M5617DRR70014A3A	31	115/208-230	Man.	3.2	1.25	10.99	S, MX, 53
3/4	1800	S56	**100003.00**	D	A4C17DH4	25	115/208-230	Auto.	5.4	1.25	10.99	S, MX
3/4	1800	56	**E119854.00**	√	A56B17DRR70006A3A	28	115/208-230	Auto.	3.3	1.25	12.49	S, MX, 53
3/4	1200	56H	**E110003.00**	√	C6K11DB6	45	115/208-230	None	3.3	1.15	13.62	S, MX, 53

Green items are premium efficient.

D - Item to be discontinued once inventory is depleted.

Continued on next page.

♥ Note listing on inside back flap.
Specifications are subject to change without notice.

NEMA is a trademark of National Electrical Manufacturers Association and is not owned or controlled by Regal Beloit Corporation.

Single Phase ODP Motors

ecoSaver™

Capacitor Start – General Purpose

Single Phase – Drip-Proof – Rigid Base

HP	SYN RPM 60 Hz	NEMA® Frame	Catalogue Number	Availability	Model Number	App. Wgt. (lbs)	Voltage	Over-load Prot.	F. L. Amps @ 230 V	Service Factor	"C" Dim. (Inches)	♥Notes
1	3600	56	**E110360.00**	√	C6K34DB31	29	115/208-230	None	3.9	1.25	11.37	S, US, 53
1	3600	56	**E110097.00**	√	M6K34DB37	30	115/208-230	Man.	3.9	1.25	11.37	S, US, 53
1	1800	56	**110004.00**	D	C6C17DB2	28	115/208-230	None	6.4	1.15	11.87	S, US
1	1800	56	**E110004.00**	√	C6K17DB52	29	115/208-230	None	4.2	1.15	11.44	S, US, 53
1	1800	56	**110167.00**	D	M6C17DB7	30	115/208-230	Man.	6.4	1.15	10.84	S, US
1	1800	56H	**E110167.00**	√	M6K17DB54	33	115/208-230	Man.	4.2	1.15	11.87	S, US, 53
1	1800	56	**110000.00**	D	A6C17DB1	28	115/208-230	Auto.	6.4	1.15	10.88	S, US
1	1800	56H	**E110000.00**	√	A6K17DB56	31	115/208-230	Auto.	4.2	1.15	11.87	S, US, 53
1	1800	143T	**120044.00**	√	C143C17DB3	38	115/208-230	None	6.4	1.15	11.28	S, US
1	1800	143T	**120003.00**	√	M143C17DB2	33	115/208-230	Man.	6.4	1.15	11.31	S, US
1	1800	143T	**120000.00**	√	A143C17DB1	32	115/208-230	Auto.	6.4	1.15	11.33	S, US
1 1/2	3600	56	**E110361.00**	√	C6K34DB32	30	115/208-230	None	6.1	1.15	11.87	S, US, 53
1 1/2	3600	56	**110110.00**	D	M6C34DB4	28	115/208-230	Man.	8.2	1.15	10.84	S, US
1 1/2	3600	56H	**E113631.00**	√	M6K34DB35	39	115/208-230	Man.	6.1	1.15	12.37	S, US, 53
1 1/2	3600	143T	**120107.00**	√	C143C34B1	32	115/208-230	None	8.2	1.15	11.28	S, US
1 1/2	1800	56H	**110005.00**	D	C6K17DB1H	40	115/208-230	None	8.6	1.15	11.84	S, US,6, 53
1 1/2	1800	56H	**E110005.00**	√	C6K17DB53	38	115/208-230	None	6.5	1.15	12.87	S, US, 53
1 1/2	1800	56H	**110006.00**	D	P6K17DB2	38	115/208-230	Man.	8.6	1.15	11.84	S, US, 53
1 1/2	1800	56H	**E113266.00**	√	M6K17DB55	45	115/208-230	Man.	4.2	1.15	12.87	S, US, 53
1 1/2	1800	145T	**120042.00**	√	C145K17DB5	38	115/208-230	None	8.6	1.15	12.28	S, US, 53
1 1/2	1800	145T	**120004.00**	√	P145K17DB3	40	115/208-230	Man.	8.6	1.15	12.28	S, US, 53
1 1/2	1800	145T	**120001.00**	√	U145K17DB1	40	115/208-230	Auto.	8.6	1.15	12.28	S, US, 53
2	3600	56	**110363.00**	D	C6C34DB22	37	115/208-230	None	10.0	1.15	11.84	S, US
2	3600	56	**E110363.00**	√	C6K34DB33	38	115/208-230	None	8.0	1.15	11.87	S, US, 53
2	3600	56H	**110362.00**	D	P6C34DB21	38	115/208-230	Man.	10.0	1.15	12.34	S, US
2	3600	56	**E113632.00**	√	M6K34DB40A	39	115/208-230	Man.	8.0	1.15	12.37	S, US, 53
2	3600	145T	**120106.00**	√	C145C34DB3	40	115/208-230	None	10.0	1.15	12.28	S, US
2	1800	56H	**E116704.00**	√	M56B17DRR70033A3AA	45	115/208-230	Man.	8.0	1.15	14.49	S, US, 53
2	1800	145T	**120067.00**	√	C145K17DB9	42	115/208-230	None	10.5	1.15	13.28	S, US, 53
2	1800	145T	**120879.00**	√	P145K17DB38	51	115/208-230	Man.	8.6	1.15	12.45	S, US, 53
2	1800	184T	**131515.00**	√	C182C17DB8	56	115/208-230	None	12.4	1.15	13.19	S, MX
2	1800	184T	**131536.00**	√	P182C17DB10	63	115/208-230	Man.	12.4	1.15	13.19	S, MX
2	1800	184T	**131535.00**	√	U182C17DB9	63	115/208-230	Auto.	12.4	1.15	13.19	S, MX

Green items are premium efficient.

D - Item to be discontinued once inventory is depleted.

Continued on next page.

♥ Note listing on inside back flap.
Specifications are subject to change without notice.

NEMA is a trademark of National Electrical Manufacturers Association and is not owned or controlled by Regal Beloit Corporation.

LEESON®

Single Phase – Drip-Proof – Rigid Base

HP	SYN RPM 60 Hz	NEMA® Frame	Catalogue Number	Availability	Model Number	App. Wgt. (lbs)	Voltage	Over-load Prot.	F. L. Amps @ 230 V	Service Factor	"C" Dim. (Inches)	♥Notes
3	3600	56H	**E116706.00**	√	M6K34DK28A	39	208-230	Man.	11.6	1.0	13.5	S, MX, 53
3	3600	184T	**131636.00**	√	C182K34DB3	74	115/208-230	None	14.0	1.15	14.18	S, MX, 53
3	1800	184T	**131534.00**	√	C184C17DB19	69	115/208-230	None	16.9	1.15	14.19	S, MX
3	1800	184T	**131561.00**	√	P184C17DB21	76	115/208-230	Man.	16.9	1.15	14.19	S, MX
3	1800	184T	**131851.00**	√	C184K17DB40	72	208-230	Man.	12.8	1.15	13.69	S, MX, 53
3	1800	184T	**131530.00**	√	U184C17DB20	69	115/208-230	Auto.	16.9	1.15	14.19	S, MX
5	3600	56H	**116708.00**	√	P6K34DB26	45	208-230	Man.	20.8	1.0	13.34	S, US, 53
5	3600	184T	**131616.00**	√	C184K34DB3	84	208-230	None	22.0	1.15	14.69	S, MX, 53
5	3600	145T	**120554.00**	√	P145K34DB1D	48	230	Man.	20.8	1.0	13.31	S, US, 53, 80
5	1800	184T	**131537.00**	√	C184K17DB31	83	208-230	None	21.0	1.15	14.69	S, MX, 53
5	1800	184T	**131560.00**	√	C184K17DB32	82	208	None	23.2	1.15	14.69	S, MX, 53
5	1800	184T	**131622.00**	√	P184K17DB33	82	208-230	Man.	21.0	1.15	14.69	S, MX, 53
7 1/2	3600	184T	**132044.00**	√	C184K34DB8	110	208-230	Tstat	31.0	1.15	16.69	S, MX, 53
7 1/2	3600	213T	**140680.00**	√	C213K34DB1	112	208-230	None	29.5	1.15	18.04	S, MX, 53
7 1/2	1800	215T	**140155.00**	√	C215K17DB2	113	208-230	None	36.0	1.15	17.26	S, MX, 53
10	3600	215T	**140681.00**	√	C215K34DB1	135	208-230	None	37.0	1.15	19.29	S, MX, 53
10	1800	215TZ	**140311.00**	D	C215K17DB4	140	208-230	None	43.0	1.25	19.76	S, MX, 53
10	1800	215TZ	**141430.00**	√	C215K17DB18H159	—	208-230	None	39.0	1.25	21.09	S, MX, 53

Green items are premium efficient.
D - Item to be discontinued once inventory is depleted.

♥ Note listing on inside back flap.
Specifications are subject to change without notice.

NEMA is a trademark of National Electrical Manufacturers Association and is not owned or controlled by Regal Beloit Corporation.

Single Phase - C Face Motors

ecoSaver™

Drip-Proof - Capacitor Start
General Purpose - C Face Less Base

Single Phase - Drip-Proof - C Face Less Base

HP	SYN RPM 60 Hz	NEMA® Frame	Catalogue Number	Availability	Model Number	App. Wgt. (lbs)	Voltage	Over-load Prot.	F. L. Amps @ 230 V	Service Factor	"C" Dim. (Inches)	♥Notes
1/4	1800	S56C	**100023.00**	D	C4C17DC7	17	115/208-230	None	2.7	1.35	9.24	S,MX
1/4	1800	S56C	**E100023.00**	√	C4K17DC13	18	115/208-230	None	1.2	1.35	10.74	S,MX,53
1/4	1800	S56C	**101521.00**	D	A4C17DC79	17	115/208-230	Auto.	2.7	1.35	9.24	S,MX
1/4	1800	S56C	**E101521.00**	√	A4K17DC19	18	115/208-230	Auto.	1.2	1.35	10.74	S,MX,53
1/3	3600	S56C	**E100354.00**	√	C4K34DC4	29	115/208-230	None	1.5	1.35	10.24	S,MX,53
1/3	3600	S56C	**100355.00**	D	A4C34DC12	17	115/208-230	Auto.	2.8	1.35	8.99	S,MX
1/3	3600	S56C	**E100355.00**	√	A4K34DC6A	18	115/208-230	Auto.	1.5	1.35	10.49	S,MX,53
1/3	1800	S56C	**100024.00**	D	C4C17DC8J	17	115/208-230	None	3.3	1.35	9.24	S, MX
1/3	1800	S56C	**E100024.00**	√	C4K17DC12	19	115/208-230	None	1.9	1.35	10.99	S,MX,53
1/3	1800	S56C	**100018.00**	D	M4C17DC2	18	115/208-230	Man.	3.3	1.35	9.24	S,MX
1/3	1800	S56C	**E100018.00**	√	M4K17DC20	18	115/208-230	Man.	1.9	1.35	10.99	S,MX,53
1/3	1800	S56C	**101522.00**	D	A4C17DC81	17	115/208-230	Auto.	3.3	1.35	9.24	S,MX
1/3	1800	S56C	**E101522.00**	√	A4K17DC21	20	115/208-230	Auto.	1.9	1.35	10.99	S,MX,53
1/2	3600	S56C	**E100356.00**	√	C4K34DC3	29	115/208-230	None	2.2	1.25	10.74	S,MX,53
1/2	3600	S56C	**100054.00**	D	A4C34DC1	18	115/208-230	Auto.	3.4	1.25	9.99	S,MX
1/2	3600	S56C	**E100054.00**	√	A4K34DC7	21	115/208-230	Auto.	2.2	1.25	10.99	S,MX,53
1/2	1800	S56C	**100025.00**	D	C4C17DC9J	19	115/208-230	None	4.4	1.25	9.33	S,MX
1/2	1800	S56C	**E100025.00**	√	C4K17DC14	30	115/208-230	None	2.3	1.25	11.49	S,MX,53
1/2	1800	S56C	**100019.00**	D	M4C17DC3	21	115/208-230	Man.	4.4	1.25	9.99	S,MX
1/2	1800	S56C	**E100019.00**	√	M4K17DC23	24	115/208-230	Man.	2.3	1.25	11.49	S,MX,53
1/2	1800	S56C	**100020.00**	D	A4C17DC4	20	115/208-230	Auto.	4.4	1.25	9.99	S,MX
1/2	1800	S56C	**E100020.00**	√	A4K17DC22	23	115/208-230	Auto.	2.3	1.25	10.99	S,MX,53
1/2	1200	56C	**E110381.00**	√	C6K11DC5	33	115/208-230	None	2.6	1.25	12.37	S,US
3/4	3600	S56C	**E100357.00**	√	C4K34DC5	24	115/208-230	None	3.6	1.25	11.49	S,MX,53
3/4	3600	S56C	**100055.00**	D	A4C34DC2	24	115/208-230	Auto.	4.9	1.25	10.49	S,MX
3/4	3600	S56C	**E100055.00**	√	A4K34DC8	27	115/208-230	Auto.	3.6	1.25	11.49	S,MX,53
3/4	1800	56C	**E119349.00**	√	C6K17DC50	25	115/208-230	None	3.3	1.25	13.15	S,MX
3/4	1800	S56C	**100021.00**	D	M4C17DC5	24	115/208-230	Man.	5.4	1.25	10.99	S,MX
3/4	1800	56C	**E119857.00**	√	M56B17DRC70004A3A	24	115/208-230	Man.	3.2	1.25	12.31	S,MX,53
3/4	1800	S56C	**101523.00**	D	56317DRC7003A3A	26	115/208-230	Auto.	5.4	1.25	10.99	S,MX
3/4	1800	56C	**E119862.00**	√	A56B17DRC70003A3A	29	115/208-230	Auto.	3.2	1.25	10.99	S,MX,53
3/4	1200	56C	**E110382.00**	√	C6K11DC6	47	115/208-230	None	3.3	1.15	13.62	S,US,53
1	3600	56C	**E110384.00**	√	C6K34DC25	29	115/208-230	None	3.9	1.25	11.37	S, US, 53
1	3600	56C	**113337.00**	D	A6C34DC53	28	115/208-230	Auto.	6.0	1.25	10.84	S,US
1	3600	56C	**E113337.00**	√	A6K34DC31	31	115/208-230	Auto.	3.9	1.25	11.87	S,US,53
1	1800	56C	**110220.00**	D	C6C17DC3	30	115/208-230	None	6.4	1.15	10.88	S,US
1	1800	56C	**E110220.00**	√	C6K17DC51	31	115/208-230	None	4.2	1.15	11.87	S,US,53
1	1800	56C	**110036.00**	D	M6C17DC1	27	115/208-230	Man.	6.4	1.15	10.88	S,US
1	1800	56C	**E110036.00**	√	M6K17DC57	30	115/208-230	Man.	4.2	1.15	11.87	S,US,53
1	1800	143TC	**121002.00**	√	C143C17DC2	31	115/208-230	None	6.4	1.15	11.28	S,US

Green items are premium efficient.

D - Item to be discontinued once inventory is depleted.

Continued on next page.

♥ Note listing on inside back flap.
Specifications are subject to change without notice.

NEMA is a trademark of National Electrical Manufacturers Association and is not owned or controlled by Regal Beloit Corporation.

LEESON®

Single Phase - Drip-Proof - C Face Less Base

HP	SYN RPM 60 Hz	NEMA® Frame	Catalogue Number	Availability	Model Number	App. Wgt. (lbs)	Voltage	Over-load Prot.	F. L. Amps @ 230 V	Service Factor	"C" Dim. (Inches)	♥Notes
1 1/2	3600	56C	**E110387.00**	√	C6K34DC26	29	115/208-230	None	6.1	1.15	11.87	S,US,53
1 1/2	3600	56C	**E113336.00**	√	A6K34DC28	31	115/208-230	Auto.	6.1	1.15	12.37	S,US,53
1 1/2	1800	56C	**E110388.00**	√	C6K17DC52	39	115/208-230	None	6.5	1.15	12.87	S,US,53
1 1/2	1800	56C	**E110037.00**	√	M6K17DC55A	42	115/208-230	Man.	6.5	1.15	12.87	S,US,53
2	3600	56C	**E110390.00**	√	C6K34DC27	38	115/208-230	None	8.0	1.15	11.87	S,US,53
2	3600	56C	**E113335.00**	√	A6K34DC29A	39	115/208-230	Auto.	8.0	1.15	11.87	S,US,53
2	3600	145TC	**121184.00**	C/A	C145C34DC4	37	115/208-230	None	10.0	1.15	12.28	S,US
2	1800	145TC	**120073.00**	√	C145K17DC4	49	115/208-230	None	10.5	1.15	13.28	S,US,53
3	3600	56C	**113334.00**	D	P6C34DC50	36	230	Auto.	15.0	1.00	11.84	S,US
3	3600	56C	**E113334.00**	√	A6K34DC32A	39	230	Auto.	12.0	1.00	13.5	S,MX,53
3	1800	184TC	**131544.00**	√	C184C17DC5	73	115/208-230	None	16.9	1.15	14.20	S,MX
5	3600	184TC	**131777.00**	C/A	C184K34DC2	70	230	None	22.2	1.15	14.70	S,MX,53
5	1800	184TC	**131539.00**	C/A	C184K17DC6	81	230	None	21.0	1.15	14.70	S,MX,53

Green items are premium efficient.

D - Item to be discontinued once inventory is depleted.
C/A - Check availability.

♥ Note listing on inside back flap.
Specifications are subject to change without notice.

NEMA is a trademark of National Electrical Manufacturers Association and is not owned or controlled by Regal Beloit Corporation.

Single Phase - C Face Motors

ecoSaver™

Drip-Proof - Capacitor Start

Single Phase - Drip-Proof - C Face With Base

HP	SYN RPM 60 Hz	NEMA® Frame	Catalogue Number	Availability	Model Number	App. Wgt. (lbs)	Voltage	Over-load Prot.	F. L. Amps @ 230 V	Service Factor	"C" Dim. (Inches)	♥Notes
1/3	1800	S56C	**E103023.00**	√	C4K17DK2	19	115/208-230	None	1.9	1.35	10.99	S,MX,53
1/3	1800	S56C	**E103083.00**	C/A	M4K17DH18A	18	115/208-230	Man.	1.9	1.35	10.99	S,MX,53
1/2	3600	S56C	**E103024.00**	√	C4K34DK3	29	115/208-230	None	2.2	1.25	10.99	S,MX,53
1/2	1800	S56C	**E101651.00**	√	C4K17DK5	30	115/208-230	None	2.3	1.25	11.49	S,MX,53
1/2	1800	S56C	**E103084.00**	√	M4K17DH20A	21	115/208-230	Man.	2.3	1.25	11.49	S,MX,53
3/4	3600	S56C	**E103025.00**	√	C4K34DK4	29	115/208-230	None	3.6	1.25	11.49	S,MX,53
3/4	1800	56C	**E119350.00**	√	C6K17DK44	28	115/208-230	None	3.3	1.25	13.08	S,MX,53
3/4	1800	56C	**E119863.00**	√	M56B17DRK70003A3A	27	115/208-230	Man.	3.2	1.25	12.31	S,MX,53
1	3600	56C	**E116769.00**	√	C6K34DK23	29	115/208-230	None	3.9	1.25	11.37	S,US,53
1	1800	56C	**E113930.00**	√	C6K17DK45	35	115/208-230	None	4.2	1.15	11.87	S,US,53
1 1/2	3600	56C	**E116770.00**	√	C6K34DK24	36	115/208-230	None	6.1	1.15	11.87	S,US,53
1 1/2	3600	56HC	**E114214.00**	√	M6K34DK263	38	115/208-230	Man.	6.1	1.15	12.37	S,US,53
1 1/2	1800	56HC	**E113932.00**	√	C6K17DK46	40	115/208-230	None	6.5	1.15	12.87	S,US,53
1 1/2	1800	56HC	**E113700.00**	√	M6K17DK47	41	115/208-230	Man.	6.5	1.15	12.87	S,US,53
2	3600	56HC	**E116771.00**	√	C6K34DK25	36	115/208-230	None	8.0	1.15	11.87	S,US,53
2	3600	56HC	**E114215.00**	√	M6K34DK27	38	115/208-230	Man.	8.0	1.00	12.37	S,US,53
2	1800	56HC	**E113281.00**	√	M56B17DRK70002A3A	57	115/208-230	Man.	9.1	1.15	14.13	S,MX,53
2	1800	145TC	**120992.00**	√	C145K17DK7	45	115/208-230	None	10.5	1.15	13.28	S,US,53
3	3600	56HC	**E116707.00**	√	M6K34DK28A	41	115/208-230	Man.	11.6	1.00	13.50	S,MX,53
3	3600	184TC	**132083.00**	C/A	C182K34DK2	74	115/208-230	None	14.0	1.15	14.20	S,MX,53
3	1800	184TC	**131629.00**	√	P184C17DK3	70	115/208-230	Man.	16.9	1.15	14.20	S,MX
3	1800	184TC	**131853.00**	√	C184K17DK18	87	230	Man.	15.4	1.15	13.20	S,MX,53
5	3600	56HC	**116709.00**	√	P6K34DK18	46	230	Man.	20.8	1.00	13.84	S,US,53
5	3600	184TC	**131781.00**	√	C184K34DK4	70	230	None	22.2	1.15	14.70	S,MX,53
5	1800	184TC	**131630.00**	√	M184K17DK13	77	230	Man.	21.0	1.15	14.70	S,MX,53
7 1/2	3600	184TC	**132043.00**	√	C184K34DK8	112	230	T-stats	31.0	1.15	16.70	S,MX,53
7 1/2	1800	215TC	**140806.00**	√	C215K17DK5A	120	230	None	36.0	1.15	17.26	S,MX,53

Green items are premium efficient.
C/A - Check availability.

♥ Note listing on inside back flap.
Specifications are subject to change without notice.

NEMA is a trademark of National Electrical Manufacturers Association and is not owned or controlled by Regal Beloit Corporation.

LEESON®

Single Phase ODP Motors

ecoSaver™

Resilient Base Motors – General Purpose or Fan Duty

General Specifications:

- Industrial quality resilient base
- Moderate starting torque
- Belt driven fans or fan on shaft applications
- Self ventilated designs

Drip-Proof – Single Phase – Resilient Base

HP	SYN RPM 60 Hz	NEMA® Frame	Catalogue Number	Availability	Model Number	App. Wgt. (lbs)	Voltage	Over-load Prot.	F. L. Amps @ 230 V	Service Factor	"C" Dim. (Inches)	♥Notes
1/4	3600	48	**E101434.00**	√	A4K34DR4	19	115/208-230	Auto.	1.2	1.00	10.4	S, MX, 53
1/4	1800	48	**E100109.00**	√	A4K17DR18	16	115/208-230	Auto.	1.2	1.35	11.14	S, MX, 53
1/4	1800	48	**E100111.00**	√	A4K17DR17	15	115/208-230	Auto.	1.2	1.00	11.14	S, MX, 53
1/3	3600	48	**E101431.00**	√	A4K34DR1	20	115/208-230	Auto.	1.5	1.00	11.14	S, MX, 53
1/3	1800	48	**E100110.00**	√	A4K17DR19	21	115/208-230	Auto.	1.9	1.35	11.14	S, MX, 53
1/3	1800	48	**E101015.00**	√	A4K17DR20	21	115/208-230	Auto.	1.9	1.00	11.14	S, MX, 53
1/3	1800	S56	**E100014.00**	√	C4K17DJ9	20	115/208-230	None	1.9	1.35	10.97	S, MX, 53
1/3	1800	S56	**E100010.00**	√	A4K17DJ11	18	115/208-230	Auto.	1.9	1.35	11.81	S, MX, 53
1/3	1800	S56	**E100063.00**	√	A4K17DJ12	22	115/208-230	Auto.	1.9	1.00	11.81	S, MX, 53
1/2	3600	48	**E101432.00**	√	A4K34DR2	23	115/208-230	Auto.	2.2	1.00	11.39	S, MX, 53
1/2	1800	S56	**E100015.00**	√	C4K17DJ10	22	115/208-230	None	2.3	1.25	11.47	S, MX, 53
1/2	1800	S56	**E100045.00**	√	M4K17DJ13	24	115/208-230	Man.	2.3	1.00	12.31	S, MX, 53
1/2	1800	S56	**E101611.00**	√	A4K17DJ14	25	115/208-230	Auto.	2.3	1.25	12.31	S, MX, 32, 53
1/2	1800	S56	**E100011.00**	√	A4K17DJ13	25	115/208-230	Auto.	2.3	1.25	12.31	S, MX, 53
1/2	1800	S56	**E100064.00**	√	A4K17DJ79	24	115/208-230	Auto.	2.3	1.00	12.31	S, MX, 53
3/4	3600	48	**E101433.00**	√	A4K34DR3	25	115/208-230	Auto.	3.6	1.00	11.89	S, MX, 53
3/4	3600	S56	**E100603.00**	√	A4K34DJ1	28	115/208-230	Auto.	3.6	1.25	12.31	S, MX, 53
3/4	1800	56	**E119362.00**	√	C6K17DR44	27	115/208-230	None	3.3	1.25	13.21	S, MX, 53
3/4	1800	56	**E119858.00**	√	M56B17DRS70007A3A	29	115/208-230	Man.	3.2	1.25	12.54	S, MX, 53
3/4	1800	56	**E119859.00**	√	M56B17DRS70006A3A	27	115/208-230	Man.	3.2	1.25	12.54	S, MX, 53
3/4	1800	56	**E119864.00**	√	A56B17DRS70003A3A	25	115/208-230	Auto.	3.2	1.25	12.54	S, MX, 53
3/4	1800	56	**E119856.00**	√	A56B17DRS70004A3A	29	115/208-230	Auto.	3.2	1.25	12.54	S, MX, 53
3/4	1800	56	**E119860.00**	√	A56B17DRS70005A3A	27	115/208-230	Auto.	3.2	1.25	12.54	S, MX, 53
1	3600	56H	**E110478.00**	√	A6K34DR6	31	115/208-230	Auto.	3.9	1.25	12.82	S, US, 53
1	1800	56	**E113027.00**	√	C6K17DR43	31	115/208-230	None	4.2	1.15	12.88	S, US, 53
1	1800	56H	**E110007.00**	√	A6K17DR50	32	115/208-230	Auto.	4.2	1.15	12.82	S, US, 53
1	1800	56H	**E110054.00**	√	A6K17DR49	35	115/208-230	Auto.	4.5	1.00	12.82	S, US, 53
1 1/2	3600	56H	**E110479.00**	√	A6K34DR7	33	115/208-230	Auto.	7.1	1.15	13.32	S, US, 53
1 1/2	1800	56H	**E110579.00**	√	U6K17DR48	41	115/208-230	Auto.	6.5	1.15	13.82	S, US, 53
2	3600	56H	**E113633.00**	√	U6K34DR8	41	115/208-230	Auto.	8.0	1.15	12.82	S, US, 53
2	1800	56H	**E113608.00**	√	U56B17DRS70010A3A	45	115/208-230	Auto.	8.0	1.15	14.43	S, US, 6, 53

Green items are premium efficient.

♥ Note listing on inside back flap.
Specifications are subject to change without notice.

NEMA is a trademark of National Electrical Manufacturers Association and is not owned or controlled by Regal Beloit Corporation.

Single Phase TEFC Motors

Standard and Premium Efficiency
General Purpose – 115/208-230 Volt
Rigid Mount – 1/12 HP – 15 HP – 42 through 215T frame
C Face Motors - 1/6 HP - 10 HP - 48C through 215TC

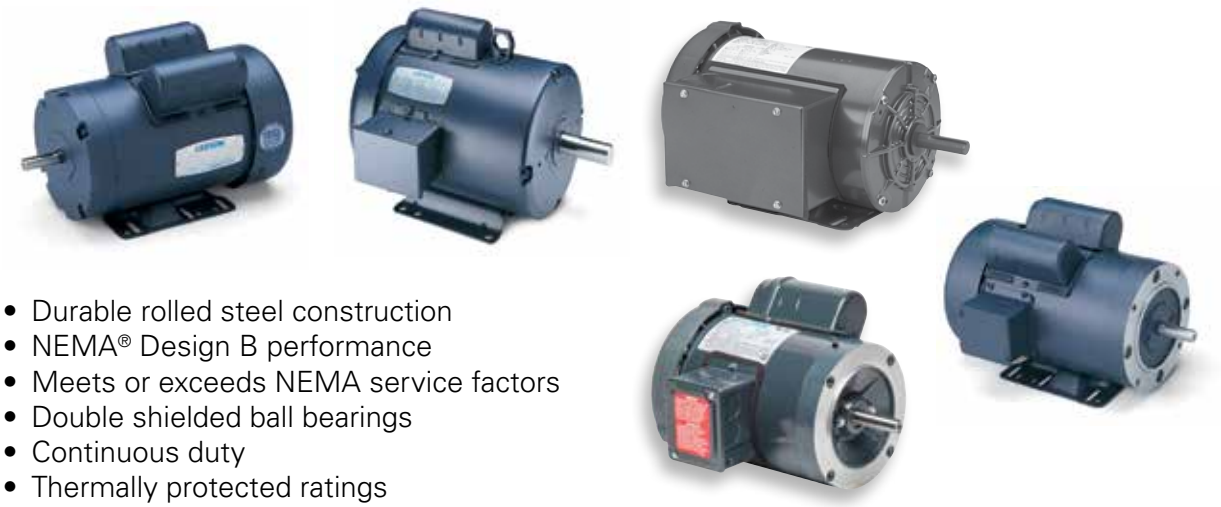

- Durable rolled steel construction
- NEMA® Design B performance
- Meets or exceeds NEMA service factors
- Double shielded ball bearings
- Continuous duty
- Thermally protected ratings
- UL recognized component listing and CSA certified

Applications:
For use where exposure to water, dust and dirt exists. Ideally suited for use on pumps, compressors, fans, conveyors and other industrial equipment.

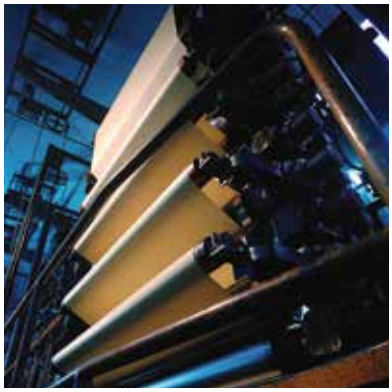

NEMA is a trademark of National Electrical Manufacturers Association and is not owned or controlled by Regal Beloit Corporation.

Single Phase – TEFC – Rigid Base

HP	SYN RPM 60 Hz	NEMA® Frame	Catalogue Number	Availability	Model Number	App. Wgt. (lbs)	Voltage	Over-load Prot.	F. L. Amps @ 230 V	Service Factor	"C" Dim. (Inches)	♥Notes
1/12	1800	42	**092111.00**	√	C42C17FB3	14	115/208-230	None	1.1	1.15	8.94	S, US
1/8	1800	42	**092114.00**	√	C42C17FB2	16	115/208-230	None	1.6	1.15	9.44	S, US
1/6	1800	42	**092116.00**	√	C42C17FB1	17	115/208-230	None	2.1	1.15	9.44	S, US
1/6	1800	48	**102012.00**	√	C4C17FB23	17	115/208-230	None	2.0	1.15	9.06	S, MX
1/6	1200	48	**102013.00**	√	C4C11FB3	23	115/208-230	None	1.9	1.15	10.31	S, MX
1/4	3600	42	**092112.00**	√	C42C34FB3	19	115/208-230	None	2.1	1.15	9.94	S, US
1/4	1800	48	**102014.00**	√	C4C17FB21	20	115/208-230	None	2.7	1.15	9.06	S, MX
1/4	1800	48	**101446.00**	√	M4C17FB10	18	115/208-230	Man.	2.7	1.15	9.06	S, MX
1/4	1800	S56	**101053.00**	√	C4C17FH4F	21	115/208-230	None	2.7	1.15	10.31	S, MX
1/4	1200	48	**102015.00**	√	C4C11FB4	23	115/208-230	None	3.2	1.15	11.31	S, MX
1/4	1200	56	**114617.00**	√	C6C11FB7	30	115/208-230	None	2.8	1.15	11.81	S, US
1/3	3600	48	**102016.00**	√	C4C34FB10	21	115/208-230	None	2.8	1.15	9.06	S, MX
1/3	1800	48	**100955.00**	√	C4C17FB3	19	115/208-230	None	3.3	1.15	9.56	S, MX
1/3	1800	48	**102018.00**	√	M4C17FB22	20	115/208-230	Man.	3.3	1.15	9.56	S, MX
1/3	1800	S56	**102931.00**	√	C4C17FH31	23	115/208-230	None	3.1	1.15	10.44	S, MX
1/3	1800	S56	**102933.00**	√	M4C17FH33	23	115/208-230	Man.	3.1	1.15	10.44	S, MX
1/3	1800	S56	**102932.00**	√	A4C17FH32	23	115/208-230	Auto.	3.1	1.15	10.44	S, MX
1/3	1800	56	**113765.00**	√	M6K17FB33	27	115/208-230	Man.	1.7	1.15	10.81	S, US, 53
1/3	1200	48	**102019.00**	√	C4C11FB5	28	115/208-230	None	3.1	1.00	11.56	S, MX
1/3	1200	56	**110009.00**	√	C6C11FB1	34	115/208-230	None	3.6	1.00	12.31	S, US
1/2	3600	48	**102020.00**	√	C4C34FB9	27	115/208-230	None	3.5	1.15	9.31	S, MX
1/2	3600	S56	**102905.00**	√	C4C34FH8	22	115/208-230	None	3.5	1.15	9.94	S, MX
1/2	3600	S56	**102904.00**	√	M4C34FH7	25	115/208-230	Man.	3.5	1.15	9.94	S, MX
1/2	1800	48	**100956.00**	√	C4C17FB4	22	115/208-230	None	4.0	1.15	10.31	S, MX
1/2	1800	S56	**102906.00**	√	C4C17FH28	22	115/208-230	None	4.0	1.15	10.69	S, MX
1/2	1800	S56	**102909.00**	√	M4C17FH30	22	115/208-230	Man.	4.0	1.15	10.69	S, MX
1/2	1800	S56	**102908.00**	√	A4C17FH29	25	115/208-230	Auto.	4.0	1.15	10.69	S, MX
1/2	1800	56	**113766.00**	√	M6K17FB34	30	115/208-230	Man.	2.5	1.15	11.31	S, US, 53
1/2	1200	56	**110011.00**	√	C6C11FB2	38	115/208-230	None	4.9	1.00	12.81	S, US

Green items are premium efficient.

Continued on next page.

♥ Note listing on inside back flap.
Specifications are subject to change without notice.

NEMA is a trademark of National Electrical Manufacturers Association and is not owned or controlled by Regal Beloit Corporation.

Single Phase TEFC Motors

Capacitor Start – General Purpose

Single Phase - TEFC - Rigid Base

HP	SYN RPM 60 Hz	NEMA® Frame	Catalogue Number	Availability	Model Number	App. Wgt. (lbs)	Voltage	Over-load Prot.	F. L. Amps @ 230 V	Service Factor	"C" Dim. (Inches)	♥Notes
3/4	3600	56	**110276.00**	√	C6C34FB15	26	115/208-230	None	5.0	1.15	11.31	S, US
3/4	3600	56	**110108.00**	√	M6C34FB7	26	115/208-230	Man.	5.0	1.15	11.31	S, US
3/4	1800	56	**110013.00**	√	C6C17FB2	29	115/208-230	None	5.4	1.15	11.31	S, US
3/4	1800	56	**110022.00**	√	M6C17FB7	29	115/208-230	Man.	5.4	1.15	11.31	S, US
3/4	1800	56	**110017.00**	√	A6C17FB4	26	115/208-230	Auto.	5.4	1.15	11.31	S, US
3/4	1800	56	**113767.00**	√	M6K17FB35	35	115/208-230	Man.	3.2	1.15	11.81	S, US, 53
3/4	1200	56H	**110400.00**	√	C6K11FB1	43	115/208-230	None	5.3	1.00	13.31	S, US, 53
1	3600	56	**110059.00**	√	C6C34FB5	28	115/208-230	None	6.0	1.15	11.81	S, US
1	3600	56	**110142.00**	√	M6C34FB2	28	115/208-230	Man.	6.0	1.15	11.81	S, US
1	1800	56H	**110209.00**	√	C6C17FB17	30	115/208-230	None	7.0	1.15	11.81	S, US
1	1800	56	**110023.00**	√	M6C17FB8	29	115/208-230	Man.	6.4	1.15	11.81	S, US
1	1800	56	**110018.00**	√	A6C17FB5	29	115/208-230	Auto.	6.4	1.15	12.31	S, US
1	1800	56	**113768.00**	√	M6K17FB36	37	115/208-230	Man.	4.2	1.15	12.31	S, US, 53
1	1800	143T	**120025.00**	√	C143C17FB3	34	115/208-230	None	6.4	1.15	12.75	S, US
1	1800	143T	**120008.00**	√	M143C17FB2	31	115/208-230	Man.	6.4	1.15	12.75	S, US
1	1200	145T	**120043.00**	√	C145K11FB1	49	115/208-230	None	6.7	1.00	14.25	S, US, 53
1 1/2	3600	56	**110094.00**	√	C6C34FB6	32	115/208-230	None	8.5	1.00	12.31	S, US
1 1/2	3600	56	**110109.00**	√	M6C34FB8	31	115/208-230	Man.	8.5	1.00	12.31	S, US
1 1/2	3600	143T	**120130.00**	√	C143C34FB1	36	115/208-230	None	8.5	1.00	13.25	S, US
1 1/2	1800	56H	**110253.00**	√	C6K17FB9	38	115/208-230	None	8.6	1.00	12.81	S, US, 53
1 1/2	1800	56H	**113333.00**	√	M6K17FB32	38	115/208-230	Man.	8.6	1.00	12.81	S, US, 53
1 1/2	1800	56H	**110019.00**	√	U6K17FB1	38	115/208-230	Auto.	8.6	1.00	12.81	S, US, 53
1 1/2	1800	56H	**113769.00**	√	M6K17FB37	43	115/208-230	Man.	6.5	1.15	13.31	S, US, 53
1 1/2	1800	145T	**120026.00**	√	C145K17FB3	44	115/208-230	None	8.6	1.00	13.25	S, US, 53
1 1/2	1800	145T	**120009.00**	√	M145K17FB2	42	115/208-230	Man.	8.6	1.00	13.25	S, US, 53
1 1/2	1200	184T	**131526.00**	√	C184C11FB2	69	115/208-230	None	11.0	1.00	15.46	S, MX

Green items are premium efficient.

Continued on next page.

♥ Note listing on inside back flap.
Specifications are subject to change without notice.

NEMA is a trademark of National Electrical Manufacturers Association and is not owned or controlled by Regal Beloit Corporation.

LEESON®

Single Phase - TEFC - Rigid Base

HP	SYN RPM 60 Hz	NEMA® Frame	Catalogue Number	Availability	Model Number	App. Wgt. (lbs)	Voltage	Over-load Prot.	F. L. Amps @ 230 V	Service Factor	"C" Dim. (Inches)	♥Notes
2	3600	56H	**110352.00**	√	C6C34FB21	41	115/208-230	None	10.0	1.00	13.31	S, US
2	3600	56H	**110402.00**	√	P6C34FB23	41	115/208-230	Man.	10.0	1.00	13.31	S, US
2	3600	145T	**120036.00**	√	C145C34FB1	42	115/208-230	None	10.0	1.00	13.75	S, US
2	3600	145T	**120395.00**	√	P145C34FB5	44	115/208-230	Man.	10.0	1.00	13.75	S, US
2	1800	56HZ	**113770.00**	√	M6K17FB38	49	208-230	Man.	8.2	1.15	14.25	S, US ,3, 53
2	1800	145T	**121507.00**	√	C145K17FB24	48	115/208-230	None	9.2	1.15	13.75	S, US, 53
2	1800	145T	**120867.00**	√	P145K17FB22	48	115/208-230	Man.	9.2	1.00	13.75	S, US, 53
2	1800	182T	**131509.00**	√	C182C17FB11	65	115/208-230	None	12.4	1.00	14.46	S, MX
2	1200	215T	**140747.00**	C/A	C215K11FB3	118	115/208-230	None	11.2	1.15	18.71	S, MX, 53
3	3600	56H	**116705.00**	√	P6K34FB31	53	208-230	Man.	14.0	1.00	13.81	S, US, 53
3	3600	145T	**120341.00**	√	C145K34FB3	46	208-230	None	13.0	1.00	14.25	S, US, 53
3	3600	145T	**A019341.00**	√	C145K34F3A	51	208-230	None	11.8	1.0	14.87	S, MX, 53
3	3600	182T	**131637.00**	√	C182K34FB2	78	115/208-230	None	13.4	1.15	14.96	S, MX, 53
3	1800	184T	**131533.00**	√	C184C17FB12	83	115/208-230	None	16.8	1.00	16.46	S, MX
3	1800	184T	**131855.00**	√	P184K17FB26	88	208-230	Man.	13.6	1.15	14.96	S, MX, 53
5	3600	184T	**131549.00**	√	C184K34FB6	93	208-230	None	19.8	1.15	16.96	S, MX, 53
5	3600	184T	**132042.00**	√	P184K34FB9	103	208-230	Man.	19.8	1.15	16.97	S, MX, 53
5	1800	184T	**131538.00**	√	C184K17FB15	95	208-230	None	23.0	1.00	17.46	S, MX, 53
5	1800	184T	**131856.00**	√	P184K17FB25	95	208-230	Man.	21.0	1.00	15.96	S, MX, 53
7 1/2	3600	213T	**140684.00**	√	C213K34FB1	120	208-230	None	32.0	1.00	18.34	S, MX, 53
7 1/2	1800	215T	**140120.00**	√	N215K17FB1	169	208-230	None	33.6	1.15	20.21	S, MX, 53
10	3600	215T	**140685.00**	√	C215K34FB1	138	208-230	None	41.5	1.00	19.84	S, MX, 53
10	1800	215T	**140581.00**	√	C215K17FB12	202	208-230	None	40.0	1.15	20.71	S, MX, 53
15	1800	256TZ	**851150.00**	√	C256K17FB1	309	208-230	None	58.0	1.00	28.65	S, MX

Green items are premium efficient.
C/A - Check availability.

♥ Note listing on inside back flap.
Specifications are subject to change without notice.

NEMA is a trademark of National Electrical Manufacturers Association and is not owned or controlled by Regal Beloit Corporation.

Single Phase - C Face Motors

Totally Enclosed - Capacitor Start - General Purpose

Single Phase - Totally Enclosed - C Face Less Base

HP	SYN RPM 60 Hz	NEMA® Frame	Catalogue Number	Availability	Model Number	App. Wgt. (lbs)	Voltage	Over-load Prot.	F. L. Amps @ 230 V	Service Factor	"C" Dim. (Inches)	♥Notes
1/6	1800	48CZ	**102661.00**	√	C4C17FC25	14	115/208-230	None	2.0	1.15	9.19	S, MX, 25
1/4	1800	48CZ	**101765.00**	√	C4C17FC10	18	115/208-230	None	2.7	1.15	9.19	S, MX, 25
1/4	1800	S56C	**102868.00**	√	C4C17NC26	22	115/208-230	None	2.3	1.15	9.80	S, MX, 25
1/4	1800	S56C	**102866.00**	√	C4C17FC34	18	115/208-230	None	2.7	1.15	9.44	S, MX
1/3	3600	S56C	**102870.00**	√	C4C34FC13	20	115/208-230	None	2.8	1.15	9.44	S, MX
1/3	1800	48CZ	**102663.00**	√	C4C17FC26	19	115/208-230	None	3.3	1.15	9.69	S, MX
1/3	1800	S56C	**101766.00**	√	C4C17FC9	22	115/208-230	None	3.3	1.15	9.94	S, MX, 25
1/3	1800	S56C	**102867.00**	√	C4C17NC25	23	115/208-230	None	2.6	1.15	10.30	S, MX
1/3	1800	S56C	**102869.00**	√	M4C17NC27	25	115/208-230	Man.	2.6	1.15	10.30	S, MX
1/2	3600	S56C	**102864.00**	√	C4C34FC12	22	115/208-230	None	3.5	1.15	9.94	S, MX
1/2	3600	S56C	**102872.00**	√	M4C34FC14	25	115/208-230	Man.	3.5	1.15	9.94	S, MX
1/2	1800	48CZ	**102665.00**	C/A	C4C17FC27	22	115/208-230	None	4.0	1.00	10.44	S, MX
1/2	1800	S56C	**102862.00**	√	C4C17FC32	21	115/208-230	None	4.0	1.15	10.69	S, MX, 25
1/2	1800	S56C	**102865.00**	√	M4C17FC33	22	115/208-230	Man.	4.0	1.15	10.69	S, MX
1/2	1800	S56C	**102871.00**	√	A4C17FC35	24	115/208-230	Auto.	4.0	1.15	10.69	S, MX
1/2	1200	56C	**110411.00**	√	C6C11FC1	37	115/208-230	None	4.9	1.00	12.81	S, MX
3/4	3600	56C	**110413.00**	√	C6C34FC8	26	115/208-230	None	5.0	1.15	11.31	S, US
3/4	3600	56C	**110412.00**	√	M6C34FC7	28	115/208-230	Man.	5.0	1.15	11.31	S, MX
3/4	1800	56C	**110057.00**	√	C6C17FC6	25	115/208-230	None	5.4	1.15	11.31	S, US
3/4	1800	56C	**110040.00**	√	M6C17FC2	26	115/208-230	Man.	5.4	1.15	11.31	S, MX
3/4	1800	56C	**110308.00**	√	A6C17FC8	28	115/208-230	Auto.	5.4	1.15	11.31	S, US
3/4	1200	56C	**110414.00**	√	C6K11FC2	42	115/208-230	None	5.3	1.00	13.31	S, US

C/A - Check availability.

Continued on next page.

♥ Note listing on inside back flap.
Specifications are subject to change without notice.

NEMA is a trademark of National Electrical Manufacturers Association and is not owned or controlled by Regal Beloit Corporation.

LEESON®

Single Phase - Totally Enclosed - C Face Less Base

HP	SYN RPM 60 Hz	NEMA® Frame	Catalogue Number	Availability	Model Number	App. Wgt. (lbs)	Voltage	Over-load Prot.	F. L. Amps @ 230 V	Service Factor	"C" Dim. (Inches)	♥Notes
1	3600	56C	**110416.00**	√	C6C34FC10	28	115/208-230	None	6.0	1.15	11.81	S, US
1	3600	56C	**110415.00**	√	M6C34FC9	28	115/208-230	Man.	6.0	1.15	11.81	S, US
1	1800	56C	**110058.00**	√	C6C17FC7	33	115/208-230	None	6.4	1.15	11.81	S, US
1	1800	56C	**110041.00**	√	M6C17FC3	29	115/208-230	Man.	6.4	1.15	11.81	S, US
1	1800	143TC	**121001.00**	√	C143C17FC2	32	115/208-230	None	6.4	1.15	12.25	S, US
1 1/2	3600	56C	**110419.00**	√	C6C34FC12	31	115/208-230	None	8.5	1.00	12.31	S, US
1 1/2	3600	56C	**110418.00**	√	M6C34FC11	31	115/208-230	Man.	8.5	1.00	12.31	S, US
1 1/2	3600	143TC	**120101.00**	√	C143C34FC1	36	115/208-230	None	8.5	1.00	12.75	S, US
1 1/2	1800	56C	**110420.00**	√	C6K17FC2	37	115/208-230	None	8.6	1.00	12.81	S, US, 53
1 1/2	1800	56C	**110042.00**	√	M6K17FC1	40	115/208-230	Man.	8.6	1.00	12.81	S, US
1 1/2	1800	145TC	**120017.00**	√	C145K17FC3	40	115/208-230	None	8.6	1.00	13.75	S, US, 53
2	3600	56C	**110422.00**	√	C6C34FC14	40	115/208-230	None	10.0	1.00	13.31	S, US
2	3600	56C	**110421.00**	√	P6C34FC13	41	115/208-230	Man.	10.0	1.00	13.31	S, US
2	3600	145TC	**120102.00**	√	C145C34FC2	43	115/208-230	None	10.0	1.00	13.75	S, US
2	1800	56C	**112136.00**	√	C6K17FC9	41	115/208-230	None	9.2	1.00	13.31	S, US, 53
2	1800	145TC	**120060.00**	√	P145K17FC2	45	115/208-230	Man.	10.0	1.00	14.25	S, US, 53
2	1800	182TC	**131516.00**	C/A	C182C17FC3	64	115/208-230	None	12.4	1.00	14.47	S, MX
3	3600	145TC	**120824.00**	√	P145K34FC6	56	208-230	Man.	13.0	1.00	14.25	S, US, 53
3	1800	184TC	**131545.00**	√	C184C17FC4	82	115/208-230	None	16.8	1.00	16.47	S, MX
5	3600	184TC	**131778.00**	√	C184K34FC2	81	115/208-230	None	19.8	1.15	16.97	S, MX, 53
5	1800	184TC	**131540.00**	√	C184K17FC6	104	208-230	None	23.0	1.00	17.47	S, MX, 53

C/A - Check availability.

♥ Note listing on inside back flap.
Specifications are subject to change without notice.

NEMA is a trademark of National Electrical Manufacturers Association and is not owned or controlled by Regal Beloit Corporation.

Single Phase C Face Motors

Totally Enclosed - Capacitor Start - General Purpose

Single Phase - Totally Enclosed - C Face With Base

HP	SYN RPM 60 Hz	NEMA® Frame	Catalogue Number	Availability	Model Number	App. Wgt. (lbs)	Voltage	Over-load Prot.	F. L. Amps @ 230 V	Service Factor	"C" Dim. (Inches)	♥Notes
1/4	1800	S56C	**102916.00**	√	C4C17FK4	22	115/208-230	None	2.7	1.15	9.69	S, MX
1/3	3600	S56C	**102929.00**	√	C4C34FK16	22	115/208-230	None	2.8	1.15	9.69	S, MX
1/3	1800	S56C	**102930.00**	√	C4C17FK6	24	115/208-230	None	3.1	1.15	10.44	S, MX
1/3	1800	S56C	**103082.00**	√	M4C17FK7	24	115/208-230	Man.	3.1	1.15	10.31	S, MX
1/3	1800	S56C	**102910.00**	√	C4C17NK2	25	115/208-230	None	2.6	1.15	10.31	S, MX
1/2	3600	S56C	**102903.00**	√	C4C34FK17	25	115/208-230	None	3.5	1.15	9.94	S, MX
1/2	1800	S56C	**102907.00**	√	C4C17FK5	22	115/208-230	None	4.0	1.15	10.69	S, MX
1/2	1800	S56C	**103085.00**	√	M4C17FK8	22	115/208-230	Man.	4.0	1.15	10.69	S, MX
3/4	3600	56C	**112135.00**	√	C6C34FK36	26	115/208-230	None	5.0	1.15	11.31	S, US
3/4	1800	56C	**110905.00**	√	C6C17FK4	26	115/208-230	None	5.4	1.15	11.31	S, US
3/4	1800	56C	**116922.00**	√	M6C17FK86	26	115/208-230	Man.	5.4	1.15	11.31	S, US
1	3600	56C	**110180.00**	√	C6C34FK1	28	115/208-230	None	6.0	1.15	11.81	S, US
1	3600	56C	**115877.00**	√	M6C34FK78	28	115/208-230	Man.	6.0	1.15	11.81	S, US
1	1800	56C	**110908.00**	√	C6C17FK5	30	115/208-230	None	6.4	1.15	11.81	S, US
1	1800	56C	**115879.00**	√	M6C17FK80	32	115/208-230	Man.	6.4	1.15	11.81	S, US
1	1800	143TC	**121680.00**	√	C143C17FK1	32	115/208-230	None	6.4	1.15	12.25	S, US
1 1/2	3600	56C	**110909.00**	√	C6C34FK19	34	115/208-230	None	8.5	1.00	12.31	S, US
1 1/2	3600	56C	**115024.00**	√	M6K34FK16	35	115/208-230	Man.	6.2	1.15	12.31	S, US
1 1/2	1800	56HC	**110910.00**	√	C6K17FK2	39	115/208-230	None	8.6	1.00	12.81	S, US
1 1/2	1800	56HC	**116703.00**	√	M6K17FK50	42	115/208-230	Man.	8.6	1.15	12.81	S, US
1 1/2	1800	145TC	**121681.00**	√	C145K17FK13	40	115/208-230	None	8.6	1.00	13.75	S, US

Continued on next page.

♥ Note listing on inside back flap.
Specifications are subject to change without notice.

NEMA is a trademark of National Electrical Manufacturers Association and is not owned or controlled by Regal Beloit Corporation.

LEESON®

Single Phase C Face Motors

Totally Enclosed - Capacitor Start - General Purpose

Single Phase - Totally Enclosed - C Face With Base

HP	SYN RPM 60 Hz	NEMA® Frame	Catalogue Number	Availability	Model Number	App. Wgt. (lbs)	Voltage	Over-load Prot.	F. L. Amps @ 230 V	Service Factor	"C" Dim. (Inches)	♥Notes
2	3600	56HC	**113931.00**	√	C6C34FK52	46	115/208-230	None	10.0	1.00	13.31	S, US
2	3600	56HC	**114995.00**	√	P6K34FK15	42	115/208-230	Man.	9.2	1.15	13.31	S, US, 53
2	3600	56HC	**115878.00**	C/A	P6C34FK79	43	115/208-230	Man.	10.0	1.00	13.31	S, US
2	3600	145TC	**121008.00**	√	C145C34FK2	43	115/208-230	None	10.0	1.00	13.75	S, US
2	1800	145TC	**120274.00**	√	C145K17FK2	49	115/208-230	None	9.2	1.00	14.25	S, US, 53
2	1800	145TC	**121465.00**	√	P145K17FK10	44	115/208-230	Man.	9.2	1.00	13.75	S, US, 53
3	3600	145TC	**121825.00**	√	C145K34FK9	47	208-230	None	13.0	1.00	14.43	S, US, 53
3	3600	56HC	**115048.00**	√	P6K34FK17	53	208-230	Man.	14.0	1.00	13.31	S, US, 53
3	3600	145TC	**121060.00**	√	P145K34FK4	51	208-230	Man.	13.0	1.00	14.25	S, US, 53
3	1800	184TC	**131631.00**	√	P184C17FK9	84	115/208-230	Man.	16.8	1.00	16.47	S, MX
3	1800	184TC	**131857.00**	√	P184K17FK14	104	208-230	Man.	13.7	1.15	17.61	S, MX, 53
5	3600	184TC	**131632.00**	√	P184K34FK2	103	208-230	Man.	19.8	1.15	16.97	S, MX, 53
5	1800	184TC	**131633.00**	√	P184K17FK11	86	208-230	Man.	23.0	1.00	16.97	S, MX, 53
7 1/2	3600	213TC	**140694.00**	√	C213K34FK1	120	208-230	None	32.0	1.00	19.07	S, MX, 53
7 1/2	1800	215TC	**140807.00**	√	C215K17FK6	171	208-230	None	33.6	1.15	20.21	S, MX, 53
10	3600	215TC	**140695.00**	√	C215K34FK1	138	208-230	None	41.5	1.00	20.57	S, MX, 53
10	1800	215TC	**140678.00**	√	C215K17FK4	152	208-230	None	40.0	1.15	20.71	S, MX, 53

C/A - Check availability.

♥ Note listing on inside back flap.
Specifications are subject to change without notice.

Single Phase - TENV - General Purpose

Single Phase - TENV - Rigid Base

HP	SYN RPM 60 Hz	NEMA Frame	Catalogue Number	Availability	Model Number	App. Wgt. (lbs)	Voltage	Over-load Prot.	F. L. Amps @ 230 V	Service Factor	"C" Dim. (Inches)	♥Notes
1/6	3600	42	**092011.00**	C/A	C42C34NB1	16	115/208-230	None	1.0	1.00	9.56	S, US
1/6	1800	42	**092012.00**	C/A	C42C17NB1	21	115/208-230	None	1.8	1.00	10.56	S, US
1/4	3600	42	**092013.00**	C/A	C42C34NB2	21	115/208-230	None	1.7	1.00	10.56	S, US
1/4	1800	48	**100361.00**	√	C4C17NB4	17	115/208-230	None	2.2	1.15	9.43	S, MX
1/4	1800	S56	**102914.00**	√	C4C17NH9	24	115/208-230	None	2.3	1.15	9.81	S, MX
1/4	1800	S56	**102915.00**	√	A4C17NH10	23	115/208-230	Auto.	2.3	1.15	9.81	S, MX
1/3	3600	48	**100362.00**	√	C4C34NB2	24	115/208-230	None	2.0	1.00	9.93	S, MX
1/3	1800	S56	**102912.00**	√	C4C17NH7	25	115/208-230	None	2.6	1.15	10.81	S, MX
1/3	1800	S56	**102913.00**	C/A	M4C17NH8	25	115/208-230	Man.	2.6	1.15	10.31	S, MX
1/3	1800	S56	**102911.00**	√	A4C17NH6	24	115/208-230	Auto.	2.6	1.15	10.31	S, MX
1/2	3600	48	**100366.00**	√	C4C34NB3	27	115/208-230	None	2.9	1.00	10.43	S, MX

C/A - Check availability.

♥ Note listing on inside back flap.
Specifications are subject to change without notice.

NEMA is a trademark of National Electrical Manufacturers Association and is not owned or controlled by Regal Beloit Corporation.

Three Phase - Cast Iron

170 Series - Rigid Base - General Purpose

NEMA Premium®

For reliable performance in heavy-duty industrial applications, nothing beats the LEESON® motor Heavyweights. With their cast iron construction and 1.15 service factor, they are ideal for "tough to handle" applications.

But that's only part of the story. LEESON 170-series cast iron motors are extremely versatile and can be field converted in minutes to a number of different configurations, including:

- Severe duty TEFC (using cast iron fan guard kit)
- F2 mounting 180 frame or larger (by re-assembly)
- C face with rigid base (from stock or using C face kit)
- D flange with base (using D flange kit)

UL recognized and CSA certified.

IRIS® inverter rated insulation system from Regal provides superior motor protection against voltage spikes induced by variable frequency drives. This total insulation system protects better than spike-resistant magnet wire alone. Specially formed phase insulation, cushioned and sleeved connections (from the leads all the way into the turns),and deep-penetrating, non-hygroscopic, high temperature varnish are just a few features contributing to the extra protection. All this plus second generation, spike-resistant magnet wire. The IRIS total insulation system is standard at no extra cost in all stock NEMA three-phase motors, 1 HP and larger.

INVERTER-RATED INSULATION SYSTEM "NO-POKE" IRIS® INSULATION SYSTEM MEETS NEMA MG 1 PART 30 & 31 FOR INVERTER-FED MOTORS PROTECTED AGAINST VFD INDUCED VOLTAGE SPIKES

Stainless steel "full fact" nameplate with information on motor efficiency and power factor. Includes wiring diagram, bearing sizes, and motor weight.

Heavy-duty cast iron frame, endbells and conduit box.

High torques for hard-to-start loads. Torques exceed NEMA performance standards. Energy performance verified by Regal's NVLAP-Certified testing laboratory.

Lubrication fittings on each end of motor (254T frame and larger). New Exxon®* POLYREX®* EM lubricant for extended bearing life. Oversized bearings. Slotted-head pipe plug reliefs. Bearing caps protect against entry of grease into the motor.

Non-sparking fan. Small size reduces noise and enhances efficiency. Fan keyed to shaft.

100% copper-wound Inverter Rated Insulation System is double-dipped and baked. Stator press-fitted and pinned to housing. 1.15 Service Factor provides extra margin of power. Class F insulation system with Class B or lower temperature rise. Many suitable for 50 Hz operation at 1.0 service factor. Contact factory for details.

Dynamically balanced rotor assembly is keyed to shaft.

Cast iron endplates for maximum rigidity and long bearing life.

Steel fan cover for optimum strength. Cast iron cover available for severe service.

Oversized cast iron conduit box is gasketed and may be rotated in 90˚ increments. NPT threaded entrance.

Internal caps on shaft-end and lead-end bearings 254T frame and larger. 182T through 215T frame motors with C-faces have locked bearing on the shaft end only. Motors are suitable for all mounting positions.

One-way, corrosion resistant condensate drains. (TEFC models) release condensation and moisture.

Neoprene shaft slinger protects bearings by repelling moisture and other contaminants. Internal protection against rust and corrosion.

12-lead delta windings (254T to 405T frame and larger) for across-the-line or wye delta starts. 182T & 215T frame motors are dual voltage with nine leads. Motors above 405T frame are single voltage with six leads. 575V motors have six leads, except 213T-215T which have three leads. Permanently marked leads with lugs for easy connection. Normally-closed thermostat standard on WATTSaver® e designs.

Cast iron mounting feet. Precision-machined for accurate alignment. Dual mounting provisions (six mounting holes) on 184T, 215T, 256T, 286T, 326T, 365T, 405T, 445T, 447T and 449T frames.

*Exxon and Polyrex are trademarks of Exxon Mobil Corporation and are not owned or controlled by Regal Beloit Corporation.

NEMA and NEMA Premium are trademarks of National Electrical Manufacturers Association and are not owned or controlled by Regal Beloit Corporation.

LEESON®

Three Phase WATTSaver® e Premium Efficiency Motors

General Purpose

The WATTSaver® e line of premium efficiency motors has Regal's unique IRIS® voltage-spike-resistant insulation system, included at no extra cost. WATTsaver e motors meet or exceed most rebate programs and Federal mandated efficiency levels. The efficiency ratings have been verified to IEEE 112B test standards by Regal's NVLAP-Certified lab.

Cast iron 170 series motors can be field modified for forced ventilation service to extend the inverter-fed operating range and an encoder package is stocked for closed-loop vector inverter systems. These motors can be converted to IEEE841 compliant using the Custom PDQ Program. Contact your local sales office.

Efficiencies meet or exceed NEMA Premium on all WATTSaver e motors.

Both 3/4 and full load efficiencies are listed on the stainless steel nameplate for your convenience in calculating realistic energy savings. Unique serial number identifies each motor and is stamped clearly on the metal nameplate.

Rugged cast iron construction on three phase, 1-350 HP models. These motors share features with normal efficiency 150 series motors detailed on page 30. Add an optional cast iron fan guard for severe duty applications.

Independently verified efficiencies by the Canadian Standards Association, an internationally recognized testing laboratory. CSA Report Number EEV78720-1.

Three phase models suitable for inverter duty, as well as both 50 Hz and 60 Hz operation.

Premium efficiency motors finished with primer and chemical resistant green acrylic matte enamel. IP43 enclosure protection.

Modification to meet IEEE 841 available through Custom PDQ. Includes addition of watertight Inpro shaft seals, two-part epoxy finish, and plated hardware.

Meets or exceeds the 1997 mandated efficiency standards of the Energy Policy Act of 1992. Also meets or exceeds efficiency requirements of most electric utility rebate programs.

WATTSaver e motors comply with EISA 2007

One-way, corrosion resistant condensate drains. (TEFC models) release condensation and moisture.

Second-generation, high temperature, spike-resistant magnet wire for extended motor life. Stator impregnated with extra-heavy varnish system. 1.15 Service Factor. All WATTSaver e motors have Class F insulation with a Class B rise. Motors rated at 40 degrees C ambient.

UL and CSA Recognition

IRIS® inverter rated insulation system from Regal provides superior protection against voltage spikes induced by variable frequency drives. This protects better than spike-resistant magnet wire alone. Specially formed phase insulation, cushioned and sleeved connections (from the leads all the way into the turns), and deep-penetrating, non-hygroscopic, high temperature varnish are just a few features contributing to extra protection. All this plus second generation spike-resistant magnet wire. In all Regal's stock NEMA three-phase motors, 1 HP and larger, the inverter rated insulation system is standard at no extra cost.

Class 1 Div. 2 certification on models ending with ".00" suffix. Except as Noted.
All TEFC NEMA Premium motors with a "00" suffix date coded Jan 2012 and after are suitable for Hazardous Location designation Class I, Div2, Group A, B, C and D and additionally optional Class I, Zone 2, Groups IIC, IIB, IIA. For all motors dated coded prior to Jan 2012 - contact Regal.

NEMA and NEMA Premium are trademarks of National Electrical Manufacturers Association and are not owned or controlled by Regal Beloit Corporation.

Three Phase ODP Motors

General Purpose – Drip-Proof
230/460V & 575V Rigid Mount – 1/4 HP – 350 HP
C Face motors – 1/4 HP – 60 HP

- Standard, EPAct and premium efficient ratings
- Inverter duty rated
- Nameplated for 50 Hz operation
- Class B insulation systems, Class F 140 frame and higher
- Shielded ball bearings for direct coupled applications
  contact your local sales office for belted load applications
- Rolled steel and cast iron designs
- UL recognized and CSA certified
- WATTSaver® e premium efficient motors

NEMA Premium

Applications:
For use where water and dust exposure is minimal. Ideally suited for use on pumps, compressors, blowers, fans and other standard industrial applications.

Cast Iron WATTSaver® e Motors
Standard Features
3 HP - 350 HP
IRIS inverter rated insulation system
10:1 constant torque operation
Ring terminals on leads
TEFC enclosure
ODP enclosure
Chemical resistant paint
Cast iron conduit box
Options
C-face kits
D-flange kits
Encoder mounting provisions
Blower kit option
F-2 mounting by re-assembly
213-5T and 254-6T frame brake kits
Cast iron fan guards

NEMA and NEMA Premium are trademarks of National Electrical Manufacturers Association and are not owned or controlled by Regal Beloit Corporation.

Three Phase - Drip-Proof - Rigid Base - 230/460 Volts

HP	SYN RPM 60 Hz	NEMA® Frame	Catalogue Number	Availability	Model Number	App. Wgt. (lbs)	Voltage	F. L. Amps @ 230 V	% F.L. Eff.	Service Factor	"C" Dim. (Inches)	♥Notes
1/4	1800	S56	**E100027.00**	√	C4T17DH45	20	230/460	1.0	69.5	1.35	10.74	S, MX
1/3	3600	48	**E101447.00**	√	C4T34DB7	40	230/460	1.4	69.5	1.35	10.51	S, MX
1/3	1800	48	**E100446.00**	√	C4T17DB17	22	230/460	1.2	73.4	1.35	11.12	S, MX
1/3	1800	S56	**103017.00**	D	C4T17DH39A	23	230/460	1.3	77.0	1.25	11.49	S, MX
1/3	1800	S56	**E103017.00**	√	C4T17DH46A	22	230/460	1.2	73.4	1.25	11.49	S, MX
1/3	1200	56	**110425.00**	D	C6T11DB3D	21	230/460	1.6	65.0	1.15	9.88	S, US
1/3	1200	56	**E110425.00**	√	C6T11DH24A	23	230/460	1.6	71.4	1.15	10.37	S, US
1/2	3600	S56	**E101448.00**	√	C4T34DH11A	30	230/460	1.8	73.4	1.25	10.89	S, MX
1/2	1800	S56	**100029.00**	D	C4T17DH3E	23	230/460	2.0	68.0	1.25	9.99	S, MX
1/2	1800	56	**E119351.00**	√	C6T17DB113	23	230/460	2.0	78.2	1.25	9.87	S, US
1/2	1200	56	**E110027.00**	√	C6T11DB22	21	230/460	2.2	75.3	1.15	10.87	S, US
3/4	3600	S56	**E101449.00**	√	C4T34DH8	20	230/460	2.4	76.8	1.25	9.74	S, US
3/4	1800	56	**E116738.00**	√	C6T17DB95	27	230/460	2.4	81.5	1.25	10.87	S, US
3/4	1200	56	**E110028.00**	√	C6T11DB23	36	230/460	2.8	81.7	1.15	11.87	S, US
1	3600	56	**116128.00**	D	C6T34DB30	27	230/460	2.8	80.0	1.25	10.18	S, US
1	3600	56	**E110426.00**	√	C6T34DB40A	21	230/460	3.2	77.0	1.25	9.87	S, US
1	1800	56HZ	**E115827.00**	√	C6T17DB117	37	230/460	3.2	83.5	1.15	12.19	S, US, 3
1	1800	56	**116752.00**	D	C6T17DB92	36	230/460	3.2	85.5	1.25	11.84	S, US
1	1800	56	**E116752.00**	√	C6T17DB92	35	230/460	3.2	83.5	1.25	12.12	S, US
1	1800	143T	**121003.00**	√	C143T17DB10	40	230/460	3.2	85.5	1.25	12.19	S, US
1	1200	145T	**121517.00**	√	C145T11DB7	44	230/460	3.8	82.5	1.25	12.69	S, US
1 1/2	3600	56	**110429.00**	D	C6T34DB2E	32	230/460	4.2	81.5	1.15	10.87	S, US
1 1/2	3600	56	**E116753.00**	√	C6T34DB31	36	230/460	4.0	84.0	1.25	11.87	S, US
1 1/2	3600	143T	**121514.00**	√	C143T34DB4	39	230/460	4.0	84.0	1.25	12.19	S, US
1 1/2	1800	56HZ	**E115825.00**	√	C6T17DB114	42	230/460	4.8	86.5	1.15	13.19	S, US, 5
1 1/2	1800	56	**116754.00**	D	C6T17DB91A	35	230/460	4.8	86.5	1.25	12.22	S, US
1 1/2	1800	56	**E116754.00**	√	C6T17DB91	40	230/460	4.8	86.5	1.25	12.87	S, US
1 1/2	1800	145T	**121004.00**	√	C145T17DB32	44	230/460	4.8	86.5	1.25	12.69	S, US
1 1/2	1200	182T	**131971.00**	√	C182T11DB9	70	230/460	6.2	86.5	1.15	13.19	S , MX

Green items are premium efficient.

D - Item to be discontinued once inventory is depleted.

Note: 230/460 Volt motors are suitable for use at 208 Volts 60HZ at 1.0 Service factor.

Continued on next page.

♥ Note listing on inside back flap.
Specifications are subject to change without notice.

NEMA and NEMA Premium are trademarks of National Electrical Manufacturers Association and are not owned or controlled by Regal Beloit Corporation.

Three Phase ODP Motors

General Purpose - Standard and Premium Efficient Motors

Three Phase - Drip-Proof - Rigid Base - 230/460 Volts

HP	SYN RPM 60 Hz	NEMA® Frame	Catalogue Number	Availability	Model Number	App. Wgt. (lbs)	Voltage	F. L. Amps @ 230 V	% F.L. Eff.	Service Factor	"C" Dim. (Inches)	♥Notes
2	3600	56	**E116755.00**	√	C6T34DB38A	41	230/460	4.8	85.5	1.25	12.87	S, US
2	3600	145T	**121515.00**	√	C145T34DB15	45	230/460	4.8	86.5	1.25	12.94	S, US
2	1800	56HZ	**115826.00**	D	C6T17DB78	36	230/460	6.2	78.5	1.15	11.63	S, US, 5
2	1800	56HZ	**E115826.00**	√	C6T17DB115	46	230/460	5.8	86.5	1.15	13.69	S, US, 5
2	1800	56H	**111310.00**	D	A6T17DB127F	39	230/460	6.2	78.7	1.15	13.34	S, US, 6, 33
2	1800	56H	**E111310.00**	√	A6T17DB124	39	230/460	5.8	86.5	1.15	13.34	S, US, 6, 33
2	1800	56H	**E116756.00**	√	C6T17DB96	47	230/460	5.8	86.5	1.25	13.37	S, US, 6
2	1800	145T	**121005.00**	√	C145T17DB33	48	230/460	5.8	86.5	1.25	13.69	S, US
2	1200	184T	**131972.00**	√	C184T11DB9	81	230/460	6.8	87.5	1.15	14.19	S, MX
3	3600	56H	**E113293.00**	√	C6T34DB37	44	230/460	7.2	85.5	1.15	12.87	S, US, 6
3	3600	145T	**121516.00**	√	C145T34DB16	46	230/460	7.2	88.5	1.25	12.69	S, US
3	1800	56HZ	**116595.00**	√	C6T17DB90	47	230/460	8.6	82.5	1.15	13.13	S, US, 5
3	1800	182T	**131519.00**	√	C182T17DB37	77	230/460	8.0	89.5	1.25	13.19	S, MX
3	1800	182T	**170605.00**	√	C182T17DB55A	100	230/460	8.0	90.2	1.15	---	C, CN
3	1200	213T	**171574.00**	√	C213T11DB2	156	230/460	10.0	88.5	1.15	16.38	C, CN
5	3600	184T	**170606.00**	√	C182T34DB6	94	230/460	12.0	88.5	1.25	---	C, CN
5	3600	184T	**131986.00**	√	C184T34DB11	86	230/460	12.0	86.5	1.15	15.19	S, MX
5	1800	184T	**131520.00**	√	C184T17DB44	95	230/460	12.6	89.5	1.25	14.19	S, MX
5	1800	184T	**170613.00**	√	C184T17DB765A	106	230/460	12.6	90.2	1.25	---	C, CN
5	1200	215T	**171575.00**	√	C215T11DB6	188	230/460	15.0	90.2	1.15	17.87	C, CN
7 1/2	3600	184T	**131988.00**	√	C184T34DB12	106	230/460	17.6	88.5	1.15	16.19	S, MX
7 1/2	3600	184T	**170604.00**	√	C184T34DB14A	105	230/460	17.6	89.5	1.15	14.37	C, CN
7 1/2	1800	213T	**140470.00**	√	C213T17DB2	133	230/460	20.8	91.0	1.25	16.25	S, MX
7 1/2	1800	213T	**170142.00**	√	C213T17DB44	163	230/460	19.8	91.0	1.15	16.38	C, CN
7 1/2	1200	254T	**170145.00**	√	C254T11DB43	291	230/460	22.4	92.4	1.15	20.94	C, CN
7 1/2	900	---	*	C/A	————	---	230/460	---	---	---	---	C, CA

Shaded frame indicates cast iron construction.

Continued on next page.

Green items are premium efficient.

D - Item to be discontinued once inventory is depleted.
C/A - Check Availability.

* Motors will be assigned a catalogue/serial number at time of manufacturing. Call for pricing.

Note: 230/460 Volt motors are suitable for use at 208 Volts 60HZ at 1.0 Service factor.

♥ Note listing on inside back flap.
Specifications are subject to change without notice.

NEMA is a trademark of National Electrical Manufacturers Association and is not owned or controlled by Regal Beloit Corporation.

LEESON®

Three Phase ODP Motors

General Purpose - Standard and Premium Efficient Motors

Three Phase - Drip-Proof - Rigid Base - 230/460 Volts

HP	SYN RPM 60 Hz	NEMA® Frame	Catalogue Number	Availability	Model Number	App. Wgt. (lbs)	Voltage	F. L. Amps @ 230 V	% F.L. Eff.	Service Factor	"C" Dim. (Inches)	♥Notes
10	3600	213T	**140753.00**	√	C213T34DB4	160	230/460	23.4	89.5	1.15	17.30	S, MX
10	3600	213T	**170143.00**	√	C213T34DB45	153	230/460	23.6	90.2	1.15	16.38	C, CN
10	1800	215T	**140472.00**	√	C215T17DB15	144	230/460	26.8	91.7	1.25	17.25	S, MX
10	1800	215T	**170144.00**	√	C215T17DB49	203	230/460	25.6	91.7	1.15	17.87	C, CN
10	1200	256T	**170146.00**	C/A	C256T11DB45	305	230/460	29.6	91.7	1.15	22.60	C, CN
10	900	---	*	C/A	————	---	230/460	---	---	---	---	C, CA
15	3600	215T	**140754.00**	√	C215T34DB4	170	230/460	35.0	91.0	1.15	18.55	S, MX
15	3600	215T	**170064.00**	√	C215T34DB3	178	230/460	34.6	91.0	1.15	17.87	C, CN
15	1800	254T	**170065.00**	√	C254T17DB9	289	230/460	37.0	93.0	1.15	20.94	C, CN
15	1200	284T	**170067.00**	√	C284T11DB7	445	230/460	39.4	92.4	1.15	23.54	C,CN
15	900	---	*	C/A	————	---	230/460	---	---	---	---	C, CA
15	720	---	*	C/A	————	---	230/460	---	---	---	---	C, CA
20	3600	254T	**170032.00**	√	C254T34DB5	285	230/460	46.0	93.0	1.15	20.94	C, CN
20	1800	256T	**170006.00**	√	C256T17DB5	334	230/460	51.0	93.0	1.15	22.60	C, CN
20	1200	286T	**170000.00**	√	C286T11DB1	457	230/460	55.0	92.4	1.15	25.00	C, CN
20	900	---	*	C/A	————	---	230/460	---	---	---	---	C, CA
20	720	---	*	C/A	————	---	230/460	---	---	---	---	C, CA
25	3600	256T	**170034.00**	√	C256T34DB5	325	230/460	57.0	93.0	1.15	22.60	C, CN
25	1800	284T	**170009.00**	√	C284T17DB7	414	230/460	59.6	93.6	1.15	23.50	C, CN
25	1200	324T	**170002.00**	√	C324T11DB5	670	230/460	67.0	93.0	1.15	26.02	C, CN
25	900	326T	**C170523**	C/A	————	730	230/460	79.0	91.2	1.15	27.52	C, CA
30	3600	284TS	**170036.00**	√	C284T34DB4	406	230/460	68.5	92.4	1.15	22.17	C, CN
30	1800	286T	**170013.00**	√	C286T17DB8	490	230/460	71.0	94.1	1.15	25.00	C, CN
30	1200	326T	**170004.00**	√	C326T11DB1	760	230/460	78.0	93.6	1.15	27.52	C, CN
30	900	---	*	C/A	————	---	230/460	---	---	---	---	C.CA
30	720	---	*	C/A	————	---	230/460	---	---	---	---	C, CA

Shaded frame indicates cast iron construction.

Green items are premium efficient.

C/A - Check Availability.

* Motors will be assigned a catalogue/serial number at time of manufacturing. Call for pricing.

Note: 230/460 Volt motors are suitable for use at 208 Volts 60HZ at 1.0 Service factor.

Continued on next page.

♥ Note listing on inside back flap.
Specifications are subject to change without notice.

NEMA is a trademark of National Electrical Manufacturers Association and is not owned or controlled by Regal Beloit Corporation.

Three Phase ODP Motors

General Purpose - Standard and Premium Efficient Motors

Three Phase - Drip-Proof - Rigid Base - 230/460 Volts

HP	SYN RPM 60 Hz	NEMA® Frame	Catalogue Number	Availability	Model Number	App. Wgt. (lbs)	Voltage	F. L. Amps @ 230 V	% F.L. Eff.	Service Factor	"C" Dim. (Inches)	♥Notes
40	3600	286TS	**170038.00**	√	C286T34DB3	451	230/460	91.0	93.6	1.15	23.62	C, CN
40	1800	324T	**170017.00**	√	C324T17DB8	591	230/460	96.0	94.1	1.15	26.02	C, CN
40	1200	364T	**170147.00**	√	C364T11DB1	892	230/460	100.0	94.1	1.15	31.54	C, CN
40	900	---	*	C/A	————	---	230/460	---	---	---	---	C.CA
40	720	---	*	C/A	————	---	230/460	---	---	---	---	C, CA
50	3600	324TS	**170040.00**	√	C324T34DB3	558	230/460	112.0	94.1	1.15	24.53	C, CN
50	1800	326T	**170021.00**	√	C326T17DB5	660	230/460	118.0	94.5	1.15	27.52	C, CN
50	1200	365T	**170148.00**	√	C365T11DB1	918	230/460	125.0	94.1	1.15	32.72	C, CN
60	3600	326TS	**170042.00**	√	C326T34DB5	600	230/460	136.0	94.1	1.15	26.02	C, CN
60	1800	364T	**170025.00**	√	C364T17DB7	1115	230/460	140.0	95.4	1.15	31.54	C, CN
60	1200	404T	**170149.00**	√	C404T11DB5	1225	230/460	160.0	94.5	1.25	32.76	C, CN
75	3600	364TS	**170044.00**	√	C364T34DB3	1005	230/460	170.0	93.6	1.15	29.41	C, CN
75	1800	365T	**170029.00**	√	C365T17DB5	1050	230/460	174.0	95.4	1.15	32.72	C, CN
75	1200	405T	**170150.00**	√	C405T11DB6	1275	230/460	199.0	94.5	1.15	34.25	C, CN
100	3600	365TS	**170151.00**	√	C365T34DB4	980	230/460	226.0	94.5	1.15	29.10	C, CN
100	1800	404T	**170152.00**	√	C404T17DB5	1183	230/460	225.0	95.4	1.15	36.42	C, CN
100	1200	444T	**170269.00**	√	C444T11DB4	2115	460	118 [a]	95.4	1.15	40.00	C, CN

Shaded frame indicates cast iron construction.

Continued on next page.

Green items are premium efficient.

C/A - Check Availability.

[a] Amps at 460 volts.

* Motors will be assigned a catalogue/serial number at time of manufacturing. Call for pricing.

Note: 230/460 Volt motors are suitable for use at 208 Volts 60HZ at 1.0 Service factor.

♥ Note listing on inside back flap.
Specifications are subject to change without notice.

NEMA is a trademark of National Electrical Manufacturers Association and is not owned or controlled by Regal Beloit Corporation.

LEESON®

Three Phase - Drip-Proof - Rigid Base - 230/460 Volts

HP	SYN RPM 60 Hz	NEMA® Frame	Catalogue Number	Availability	Model Number	App. Wgt. (lbs)	Voltage	F. L. Amps @ 230 V	% F.L. Eff.	Service Factor	"C" Dim. (Inches)	♥Notes
125	3600	404TS	**170154.00**	√	C404T34DB1	1585	230/460	284	94.5	1.15	29.80	C, CN
125	1800	405T	**170155.00**	√	C405T17DB6	1292	230/460	280	95.4	1.15	34.30	C, CN
125	1200	445T	**170259.00**	√	C445T11DB4	2200	460	148 [a]	95.8	1.15	40.00	C, CN
150	3600	405TS	**171449.00**	√	C405T34DB2	1173	460	169 [a]	94.5	1.15	31.30	C, CN
150	1800	444T	**171522.00**	√	C444T17DB2	2150	460	164 [a]	95.8	1.15	40.00	C, CN
150	1200	445T	**171576.00**	√	C445T11DB5	2153	460	178 [a]	95.8	1.15	40.00	C, CN
200	3600	444TS	**171573.00**	√	C444T35DB1	1765	460	216 [a]	95.4	1.25	36.30	C, CN
200	1800	445T	**171523.00**	√	C445T17DB14	2037	460	220 [a]	95.8	1.15	40.00	C, CN
200	1200	447T	**171577.00**	√	C447T11DB1	2750	460	239 [a]	96.2	1.15	48.50	C, CN
250	1800	445T	**171524.00**	√	C445T17DB19	1986	460	288 [a]	95.8	1.15	40.00	C, CN
300	1800	445T	**171525.00**	√	C445T17DB20	1986	460	345 [a]	95.8	1.15	40.00	C, CN
350	1800	447T	**G151518.00**	D	C447T17DB9	2345	460	400 [a]	95.8	1.15	48.62	C, CA
350	1800	447T	**171518.00**	√	C447T17DB10	2318	460	400 [a]	95.8	1.15	48.62	C, CN

Shaded frame indicates cast iron construction.

Green items are premium efficient.

D - Item to be discontinued once inventory is depleted.
[a] Amps at 460 volts.

Note: 230/460 Volt motors are suitable for use at 208 Volts 60HZ at 1.0 Service factor.

♥ Note listing on inside back flap.
Specifications are subject to change without notice.

NEMA is a trademark of National Electrical Manufacturers Association and is not owned or controlled by Regal Beloit Corporation.

Three Phase C Face Motors

Drip-Proof - General Purpose - Standard Three Phase and Premium Efficient motors

Three Phase - Drip-Proof - C Face Less Base - 230/460 Volts

HP	SYN RPM 60 Hz	NEMA® Frame	Catalogue Number	Availability	Model Number	App. Wgt. (lbs)	Voltage	F. L. Amps @ 230 V	% F.L. Eff.	Service Factor	"C" Dim. (Inches)	♥Notes
1/4	1800	S56C	**103014.00**	D	C4T17DC47	14	230/460	1.4	58.0	1.35	9.24	S, MX
1/4	1800	S56C	**E103014.00**	√	C4T17DC55	17	230/460	1.0	69.5	1.35	10.74	S, MX
1/3	3600	S56C	**E100375.00**	√	C4T34DC45	19	230/460	1.4	69.5	1.35	11.04	S, MX
1/3	1800	S56C	**100048.00**	D	C4T17DC1	20	230/460	1.6	64.3	1.35	9.49	S, MX
1/3	1800	S56C	**E102695.00**	√	C4T17DC56	28	230/460	1.2	73.4	1.25	11.49	S, MX
1/2	3600	S56C	**E100056.00**	√	C4T34DC46	19	230/460	1.8	73.4	1.25	11.04	S, MX
1/2	1800	S56C	**100049.00**	D	C4T17DC2F	21	230/460	2.0	68.0	1.25	9.99	S, MX
1/2	1800	56C	**E119352.00**	√	C6T17DC97	23	230/460	2.0	78.2	1.25	9.87	S, US
1/2	1200	56C	**E110434.00**	√	C6T11DC12	26	230/460	2.2	75.3	1.15	10.87	S, US
3/4	3600	S56C	**E100378.00**	√	C4T34DC3	18	230/460	2.4	76.8	1.25	9.74	S, US
3/4	1800	S56C	**100050.00**	D	C4T17DC3F	20	230/460	2.8	75.0	1.25	10.49	S, MX
3/4	1800	56C	**E114934.00**	√	C6T17DC68	27	230/460	2.4	81.5	1.25	10.87	S, US
3/4	1200	56C	**E116728.00**	√	C6T11DC13	36	230/460	2.8	81.7	1.15	11.87	S, US
1	3600	56C	**E110111.00**	√	C6T34DC107	22	230/460	3.2	77.0	1.25	9.87	S, US
1	1800	143TC	**121064.00**	√	C143T17DC12	35	230/460	3.2	85.5	1.25	12.12	S, US
1	1800	56C	**E116740.00**	√	C6T17DC80	36	230/460	3.2	83.5	1.25	12.12	S, US
1	1200	145TC	**122162.00**	√	C145T11DC6	41	230/460	3.9	82.5	1.15	13.19	S, US
1 1/2	3600	143TC	**122214.00**	√	C143T34DC10	41	230/460	4.4	84.0	1.15	12.19	S, US
1 1/2	3600	56C	**E110437.00**	√	C6T34DC106	35	230/460	4.0	84.0	1.15	11.87	S, US
1 1/2	1800	145TC	**121063.00**	√	C145T17DC30	39	230/460	4.8	86.5	1.25	13.12	S, US
1 1/2	1800	56C	**E116741.00**	√	C6T17DC81	36	230/460	4.8	86.5	1.25	12.87	S, US

Green items are premium efficient.

D - Item to be discontinued once inventory is depleted.

Note: 230/460 Volt motors are suitable for use at 208 Volts 60HZ at 1.0 Service factor.

Continued on next page.

♥ Note listing on inside back flap.
Specifications are subject to change without notice.

NEMA is a trademark of National Electrical Manufacturers Association and is not owned or controlled by Regal Beloit Corporation.

LEESON®

Three Phase C Face Motors

Drip-Proof - General Purpose - Standard Three Phase and Premium Efficient Motors

Three Phase - Drip-Proof - C Face Less Base - 230/460 Volts

HP	SYN RPM 60 Hz	NEMA® Frame	Catalogue Number	Availability	Model Number	App. Wgt. (lbs)	Voltage	F. L. Amps @ 230 V	% F.L. Eff.	Service Factor	"C" Dim. (Inches)	♥Notes
2	3600	143TC	**122164.00**	√	C143T34DC9	47	230/460	4.8	85.5	1.15	13.19	S, US
2	3600	56C	**E113894.00**	√	C6T34DC104	41	230/460	4.8	85.5	1.15	12.87	S, US
2	1800	145TC	**121071.00**	√	C145T17DC31	44	230/460	5.8	86.5	1.25	13.62	S, US
2	1800	56C	**E116742.00**	√	C6T17DC82	44	230/460	5.8	86.5	1.25	13.37	S, US
2	1200	184TC	**132427.00**	C/A	C182T11DC112	85	230/460	7.2	88.5	1.15	15.20	S, MX
3	3600	145TC	**122163.00**	√	C145T34DC17	43	230/460	7.2	85.5	1.15	13.19	S, US
3	3600	56C	**E114420.00**	√	C6T34DC105	35	230/460	7.2	85.5	1.15	12.87	S, US
3	1800	182TC	**131518.00**	C/A	C182T17DC20	75	230/460	8.0	89.5	1.25	13.20	S, MX
5	3600	182TC	**132426.00**	√	C182T34DC111	63	230/460	12.4	86.5	1.15	13.20	S ,MX
5	1800	184TC	**131517.00**	√	C184T17DC16	99	230/460	12.6	89.5	1.25	14.20	S ,MX
7 1/2	3600	184TC	**132425.00**	√	C184T34DC110	90	230/460	17.8	88.5	1.15	14.70	S, MX
7 1/2	1800	213TC	**140483.00**	√	C213T17DC7	132	230/460	20.8	91.0	1.25	16.25	S, MX
10	3600	213TC	**141228.00**	√	C215T34DC69	145	230/460	24.2	90.2	1.15	18.03	S, MX
10	1800	215TC	**140485.00**	C/A	C213T17DC5	162	230/460	26.8	91.7	1.25	17.25	S, MX

Green items are premium efficient.

C/A - Check Availability.

Note: 230/460 Volt motors are suitable for use at 208 Volts 60HZ at 1.0 Service factor.

♥ Note listing on inside back flap.
Specifications are subject to change without notice.

NEMA is a trademark of National Electrical Manufacturers Association and is not owned or controlled by Regal Beloit Corporation.

Three Phase C Face Motors

Drip-Proof - General Purpose - Standard Three Phase and Premium Efficient Motors

Three Phase - Drip-Proof - C Face With Base - 230/460 Volts

HP	SYN RPM 60 Hz	NEMA® Frame	Catalogue Number	Availability	Model Number	App. Wgt. (lbs)	Voltage	F. L. Amps @ 230 V	% F.L. Eff.	Service Factor	"C" Dim. (Inches)	♥Notes
1/3	1800	S56C	**E103021.00**	C/A	C4T17DK9	23	230/460	1.2	77.0	1.25	11.49	S, MX
1/2	3600	S56C	**E100600.00**	√	C4T34DK18	27	230/460	1.8	73.4	1.25	11.04	S, MX
1/2	1800	56C	**E119353.00**	√	C6T17DK40	26	230/460	1.0	78.2	1.25	9.87	S, US
3/4	3600	S56C	**E102971.00**	√	C4T34DK9	21	230/460	2.4	76.8	1.25	9.74	S, US
3/4	1800	56C	**E116762.00**	√	C6T17DK30	30	230/460	2.4	81.5	1.25	10.87	S, US
1	3600	56C	**E116784.00**	√	C6T34DK16	23	230/460	3.2	77.0	1.15	9.87	S, US
1	1800	56C	**E116763.00**	√	C6T17DK33	33	230/460	3.2	83.5	1.25	12.12	S, US
1	1800	143TC	**121935.00**	√	C143T17DK6	34	230/460	3.2	85.5	1.25	12.12	S, US
1 1/2	3600	56C	**E116785.00**	√	C6T34DK20	35	230/460	4.0	84.0	1.15	11.87	S, US
1 1/2	1800	56C	**E116764.00**	√	C6T17DK32	37	230/460	4.8	86.5	1.25	12.87	S, US
1 1/2	1800	145TC	**121675.00**	√	C145T17DK22	37	230/460	4.8	86.5	1.25	13.12	S, US
2	3600	56C	**E114218.00**	√	C6T34DK25	41	230/460	4.8	85.5	1.15	12.87	S, US
2	1800	56HC	**E116765.00**	√	C6T17DK31	42	230/460	5.8	86.5	1.25	13.37	S, US, 6
2	1800	145TC	**121676.00**	√	C145T17DK21	42	230/460	5.8	86.5	1.25	13.62	S, US
3	1800	182TC	**131519CB**	√	C182T17DB37C▶	75	230/460	7.9	89.5	1.25	13.69	S, MX
5	1800	184TC	**131520CB**	√	C184T17DB44C▶	86	230/460	12.8	89.5	1.25	15.19	S, MX, 81
7 1/2	1800	213TC	**170142CB**	√	C21317DB44C▶	163	230/460	19.8	91.0	1.15	16.38	C,CN,81
10	1800	215TC	**170144CB**	√	C215T17DB49D▶	203	230/460	25.6	91.7	1.15	17.87	C,CN,81
15	1800	254TC	**170065CB**	√	C254T17DB9D▶	289	230/460	37.0	93.0	1.15	20.94	C,CN,81
20	1800	256TC	**170006CB**	√	C256T17DB5D▶	334	230/460	51.0	93.0	1.15	22.60	C,CN,81
25	1800	284TC	**170009CB**	√	C284T17DB7C▶	414	230/460	59.6	93.6	1.15	23.54	C,CN,81
30	1800	286TC	**170013CB**	√	C286T17DB8D▶	490	230/460	71.0	94.1	1.15	25.00	C,CN,81
40	1800	324TC	**170017CB**	√	C324T17DB8D▶	591	230/460	96.0	94.1	1.15	26.02	C,CN,81
50	1800	326TC	**170021CB**	√	C326T17DB5D▶	660	230/460	118.0	94.5	1.15	27.52	C,CN,81
60	1800	364TC	**170025CB**	√	C364T17DB7E▶	1115	230/460	140.0	95.4	1.15	31.54	C,CN,81

Shaded frame indicates cast iron construction.

Green items are premium efficient.

▶ Model number is from stock item with a c-face installed.
C/A - Check Availability.
Note 81: C-Flange mount with rigid base.

Note: 230/460 Volt motors are suitable for use at 208 Volts 60HZ at 1.0 Service factor.

♥ Note listing on inside back flap.
Specifications are subject to change without notice.

NEMA is a trademark of National Electrical Manufacturers Association and is not owned or controlled by Regal Beloit Corporation.

LEESON®

Three Phase Motors

Drip-Proof - General Purpose - Standard Three Phase and Premium Efficient Motors

Three Phase - Drip-Proof - Rigid Base - 575 Volts

HP	SYN RPM 60 Hz	NEMA® Frame	Catalogue Number	Availability	Model Number	App. Wgt. (lbs)	Voltage	F. L. Amps @ 575V	% F.L. Eff.	Service Factor	"C" Dim. (Inches)	♥Notes
1/3	1800	S56	**100141.00**	D	C4T17DH5C	16	575	0.64	64.3	1.35	9.38	S, MX
1/3	1800	S56	**E100141.00**	√	C4T17DH49A	22	575	0.48	73.4	1.35	11.49	S, MX
1/3	1200	56	**110702.00**	D	C6T11DB4C	23	575	0.64	65.0	1.35	10.38	S, US
1/3	1200	56	**E110702.00**	√	C6T11DB26A	26	575	0.65	71.4	1.35	10.37	S, US
1/2	1800	S56	**100153.00**	D	C4T17DH7C	18	575	0.8	68.0	1.25	9.88	S, MX, 83
1/2	1800	56	**E100153.00**	√	56T17DRR0027A3A	29	575	0.8	68.0	1.25	11.39	S, MX, 83
1/2	1200	56	**110703.00**	D	C6T11DB6D	27	575	0.9	69.0	1.25	10.88	S, US
1/2	1200	56	**E110703.00**	√	C6T11DB27A	29	575	0.88	75.3	1.25	10.87	S, US
3/4	1800	S56	**100143.00**	D	C4T17DH6C	22	575	1.1	75.0	1.25	10.88	S, MX
3/4	1800	56	**E100143.00**	√	56T17DRR70028A3A	33	575	1.1	81.5	1.25	10.87	S, MX, 83
3/4	1200	56	**110705.00**	D	C6T11DB7D	32	575	1.1	75.5	1.15	11.38	S, US
3/4	1200	56	**E110705.00**	√	C6T11DB25A	35	575	1.1	81.7	1.15	11.87	S, US
1	1800	56	**110202.00**	D	C6T17DB2D	30	575	1.7	78.5	1.15	10.88	S, US
1	1800	56	**E110202.00**	√	C6T17DB125A	36	575	1.2	84.0	1.15	12.12	S, US
1	1800	143T	**121945.00**	√	C143T17DB22A	41	575	1.2	85.5	1.25	12.12	S, US
1 1/2	1800	145T	**121946.00**	√	C145T17DB75A	43	575	1.9	86.0	1.15	12.62	S, US
2	3600	145T	**121947.00**	√	C145T34DB18A	45	575	1.9	87.0	1.25	12.62	S, US
2	1800	145T	**121948.00**	√	C145T17DB76A	52	575	2.3	86.5	1.25	13.69	S, US
3	3600	145T	**121949.00**	√	C145T34DB19A	49	575	2.9	88.4	1.15	12.62	S, US
3	1800	182T	**132261.00**	√	C182T17DB58A	71	575	3.1	89.5	1.25	13.69	S, MX
3	1800	182T	**170611.00**	√	C182T17DB56A	100	575	3.0	90.2	1.15	14.37	C, CN
3	1200	213T	**170565.00**	√	C213T11DB7	152	575	3.6	88.5	1.15	16.38	C, CN
3	900	---	*	√	————	---	575	---	---	---	---	C, CA
5	3600	184T	**170610.00**	√	C182T34DB7	93	575	4.8	88.5	1.15	14.37	C, CN
5	1800	184T	**132262.00**	√	C184T17DB80A	81	575	5.1	89.5	1.15	15.19	S, MX
5	1800	184T	**170608.00**	√	C184T17DB75A	106	575	5.0	89.5	1.15	14.37	C, CN
5	1200	215T	**170566.00**	√	C215T11DB7	188	575	5.6	90.2	1.15	16.38	C, CN
5	900	---	*	√	————	---	575	---	---	---	---	C, CA

Shaded frame indicates cast iron construction.

Continued on next page.

Green items are premium efficient.

Note 83: No C-Flange available for this model.
D - Item to be discontinued once inventory is depleted.
* Motors will be assigned a catalogue/serial number at time of manufacture. Call for pricing.

♥ Note listing on inside back flap.
Specifications are subject to change without notice.

NEMA is a trademark of National Electrical Manufacturers Association and is not owned or controlled by Regal Beloit Corporation.

Three Phase Motors

Drip-Proof - General Purpose - Standard Three Phase and Premium Efficient Motors

Three Phase - Drip-Proof - Rigid Base - 575 Volts

HP	SYN RPM 60 Hz	NEMA® Frame	Catalogue Number	Availability	Model Number	App. Wgt. (lbs)	Voltage	F. L. Amps @ 575V	% F.L. Eff.	Service Factor	"C" Dim. (Inches)	♥Notes
7 1/2	3600	184T	**170612.00**	√	C184T34DB15	105	575	7.0	90.2	1.15	14.37	C, CN
7 1/2	1800	213T	**170209.00**	√	C213T17DB45	160	575	8.0	91.0	1.15	16.38	C, CN
7 1/2	1200	254T	**170567.00**	√	C254T11DB45	291	575	8.5	91.7	1.15	20.94	C, CN
7 1/2	900	---	*	√	————	---	575	---	---	---	---	C, CA
7 1/2	720	---	*	√	————	---	575	---	---	---	---	C, CA
10	3600	213T	**170552.00**	√	C213T34DB47	150	575	9.5	90.2	1.15	16.38	C, CN
10	1800	215T	**170211.00**	√	C215T17DB50	184	575	10.5	91.7	1.15	17.87	C, CN
10	1200	256T	**170568.00**	√	C256T11DB	305	575	11.8	91.7	1.15	22.60	C, CN
10	900	---	*	√	————	---	575	---	---	---	---	C, CA
10	720	---	*	√	————	---	575	---	---	---	---	C, CA
15	3600	215T	**170553.00**	√	C215T34DB5	175	575	13.5	91	1.15	17.87	C, CN
15	1800	254T	**170216.00**	√	C254T17DB10	283	575	14.5	93	1.15	20.94	C, CN
15	1200	284T	**170569.00**	√	C284T11DB8	414	575	16	92.4	1.15	23.54	C, CN
15	900	---	*	√	————	---	575	---	---	---	---	C, CA
15	720	---	*	√	————	---	575	---	---	---	---	C, CA
20	3600	254T	**170554.00**	√	C254T34DB5	255	575	18.5	91.7	1.15	20.94	C, CN
20	1800	256T	**170046.00**	√	C256T17DB6	330	575	19.5	93	1.15	22.60	C, CN
20	1200	286T	**170570.00**	√	C286T11DB6	457	575	21.5	92.4	1.15	25.00	C, CN
20	900	---	*	√	————	---	575	---	---	---	---	C, CA
20	720	---	*	√	————	---	575	---	---	---	---	C, CA
25	3600	256T	**170555.00**	√	C256T34DB9	305	575	23	92.4	1.15	22.60	C, CN
25	1800	284T	**170048.00**	√	C284T17DB8	392	575	25	93.6	1.15	23.54	C, CN
25	1200	324T	**170571.00**	√	C324T11DB6	575	575	26.5	93	1.15	26.02	C, CN
25	900	---	*	√	————	---	575	---	---	---	---	C, CA
25	720	---	*	√	————	---	575	---	---	---	---	C, CA
30	3600	284TS	**170556.00**	√	C284T34DB8	380	575	27	91.7	1.15	22.17	C, CN
30	1800	286T	**170050.00**	√	C286T17DB9	471	575	28	94.5	1.15	25.00	C, CN
30	1200	326T	**170572.00**	√	C326T11DB6	550	575	30	93.6	1.15	27.52	C, CN
30	900	---	*	√	————	---	575	---	---	---	---	C, CA
30	720	---	*	√	————	---	575	---	---	---	---	C, CA

Shaded frame indicates cast iron construction.

Continued on next page.

Green items are premium efficient.

* Motors will be assigned a catalogue/serial number at time of manufacture. Call for pricing.

♥ Note listing on inside back flap.
Specifications are subject to change without notice.

NEMA is a trademark of National Electrical Manufacturers Association and is not owned or controlled by Regal Beloit Corporation.

Three Phase - Drip-Proof - Rigid Base - 575 Volts

HP	SYN RPM 60 Hz	NEMA® Frame	Catalogue Number	Availability	Model Number	App. Wgt. (lbs)	Voltage	F. L. Amps @ 575V	% F.L. Eff.	Service Factor	"C" Dim. (Inches)	♥Notes
40	3600	286TS	**170557.00**	√	C286T34DB5	450	575	36.5	93.6	1.15	23.62	C, CN
40	1800	324T	**170052.00**	√	C324T17DB9	550	575	39	94.1	1.15	26.02	C, CN
40	1200	364T	**170573.00**	√	C364T11DB7	875	575	40.5	94.1	1.15	28.01	C, CN
40	900	---	*	√	————	---	575	---	---	---	---	C, CA
40	720	---	*	√	————	---	575	---	---	---	---	C, CA
50	3600	324TS	**170558.00**	√	C324T34DB5	515	575	45.5	93.0	1.15	24.53	C, CN
50	1800	326T	**170054.00**	√	C326T17DB6	615	575	47.5	94.5	1.15	27.52	C, CN
50	1200	365T	**170574.00**	√	C365T11DB5	925	575	50.0	94.1	1.15	33.62	C, CN
50	720	---	*	√	————	---	575	---	---	---	---	C, CA
60	3600	326TS	**170559.00**	√	C326T34DB7	565	575	53.5	94.1	1.15	26.02	C, CN
60	1800	364T	**170200.00**	√	C364T17DB7	1000	575	58.0	95.0	1.15	31.54	C, CN
60	1200	404T	**170575.00**	√	C404T11DB6	1225	575	64.5	94.5	1.15	32.76	C, CN
60	720	---	*	√	————	---	575	---	---	---	---	C, CA
75	3600	364TS	**170560.00**	√	C364T34DB4	928	575	67.5	93.6	1.15	26.89	C, CN
75	1800	365T	**170201.00**	√	C365T17DB6	1050	575	70.5	95.4	1.15	31.18	C, CN
75	1200	405T	**170576.00**	√	C405T11DB7	1175	575	79.0	94.5	1.15	34.25	C, CN
75	720	---	*	√	————	---	575	---	---	---	---	C, CA
100	3600	365TS	**170561.00**	√	C365T34DB6	980	575	89.5	93.6	1.15	29.06	C, CN
100	1800	404T	**170202.00**	√	C404T17DB6	1075	575	90.0	95.4	1.15	32.76	C, CN
100	1200	444T	**170577.00**	√	C444T11DB5	2115	575	94.5	95.4	1.15	40.00	C, CN
125	3600	404TS	**170562.00**	√	C404T34DB4	1016	575	114.5	94.1	1.15	29.76	C, CN
125	1800	405T	**170203.00**	√	C405T17DB7	1292	575	...	95.4	1.15	34.25	C, CN
125	1200	445T	**170578.00**	√	C445T11DB6	2022	575	121.0	95.8	1.15	40.00	C, CN
150	3600	405TS	**170563.00**	√	C405T34DB3	1110	575	136.5	94.1	1.15	31.26	C, CN
150	1800	444T	**170609.00**	√	C444T17DB6	1954	575	133.5	95.8	1.15	40.00	C, CN
150	1200	445T	**170579.00**	√	C445T11DB7	2025	575	143.0	95.8	1.15	40.00	C, CN
200	3600	444TS	**170564.00**	√	C444T34DB1	1790	575	175.5	95.0	1.15	36.25	C, CN
200	1800	445T	**170205.00**	√	C445T17DB15	2030	575	180.0	95.8	1.15	40.00	C, CN
200	1200	447T	**170580.00**	√	C447T11DB1	2615	575	193.5	96.2	1.15	43.12	C, CN
250	1800	---	*	√	————	---	575	---	---	---	---	C, CA
300	1800	---	*	√	————	---	575	---	---	---	---	C, CA
350	1800	---	*	√	————	---	575	---	---	---	---	C, CA

Shaded frame indicates cast iron construction.

Green items are premium efficient.

* Motors will be assigned a catalogue/serial number at time of manufacture. Call for pricing.

Continued on next page.

♥ Note listing on inside back flap.
Specifications are subject to change without notice.

NEMA is a trademark of National Electrical Manufacturers Association and is not owned or controlled by Regal Beloit Corporation.

Three Phase C Face Motors

Drip-Proof - General Purpose - Standard Three Phase and Premium Efficient Motors

Three Phase - Drip-Proof - C-Face Motors (with or without base) - 575 Volts

HP	SYN RPM 60 Hz	NEMA® Frame	Catalogue Number	Availability	Model Number	App. Wgt. (lbs)	Voltage	F. L. Amps @ 575V	% F.L. Eff.	Service Factor	"C" Dim. (Inches)	♥Notes
1/3	1800	S56C	**E100141C**	√	C4T17DH49A▶	18	575	0.48	73.4	1.35	11.19	S, MX, 81
1	1800	56C	**110179.00**	D	C6T17DC6E	30	575	1.4	78.0	1.15	10.88	S, US
1	1800	56C	**E110179.00**	√	C6T17DC100A	36	575	1.2	84	1.15	11.87	S, US
1	1800	143TC	**121945CB**	√	C143T17DB22A▶	36	575	1.3	85.5	1.15	12.12	S, US, 81
1 1/2	1800	145TC	**121946CB**	√	C145T17DB75A▶	35	575	1.8	86.0	1.15	12.63	S, US, 81
2	1800	145TC	**121948CB**	√	C145T17DB76A▶	37	575	2.3	86.5	1.25	13.69	S, US, 81
3	1800	182TC	**132261CB**	√	C182T17DB58A▶	75	575	3.1	89.5	1.25	13.19	S, MX, 81
5	1800	184TC	**132262CB**	√	C184T17DB80A▶	86	575	5.1	89.5	1.15	14.19	S,MX, 81
7 1/2	1800	213TC	**170209CB**	√	C213T17DB45▶	160	575	8.0	91.0	1.15	16.38	C, CN, 81
10	1800	215TC	**170211CB**	√	C215T17DB50▶	184	575	10.5	91.7	1.15	17.87	C, CN, 81
15	1800	254TC	**170216CB**	√	C254T17DB10▶	283	575	14.5	93.0	1.15	20.94	C, CN, 81
20	1800	256TC	**170046CB**	√	C256T17DB6▶	330	575	19.5	93.0	1.15	22.60	C, CN, 81
25	1800	284TC	**170048CB**	√	C284T17DB8▶	392	575	25.0	93.6	1.15	23.54	C, CN, 81
30	1800	286TC	**170050CB**	√	C286T17DB9▶	471	575	28.0	94.5	1.15	25.00	C, CN, 81
40	1800	324TC	**170052CB**	√	C324T17DB9▶	550	575	39.0	94.1	1.15	26.02	C, CN, 81
50	1800	326TC	**170054CB**	√	C326T17DB6▶	615	575	47.5	94.5	1.15	27.52	C, CN, 81
60	1800	364TC	**170200CB**	√	C364T17DB7▶	1000	575	58.0	95.0	1.15	31.54	C, CN, 81

Shaded frame indicates cast iron construction.

Green items are premium efficient.

D - Item to be discontinued once inventory is depleted.
▶ Model number is from stock item with a c-face installed.
Note 81: C-Flange mount with rigid base.

Continued on next page.

♥ Note listing on inside back flap.
Specifications are subject to change without notice.

NEMA is a trademark of National Electrical Manufacturers Association and is not owned or controlled by Regal Beloit Corporation.

LEESON®

Three Phase ODP Motors

Resilient Base
General Purpose

General Specifications:

- Industrial quality resilient base
- Moderate starting torque
- Double shielded ball bearings
- Belt-driven or fan-on-shaft applications

Drip-Proof - Three Phase - Resilient Base - 230/460 Volts

HP	SYN RPM 60 Hz	NEMA® Frame	Catalogue Number	Availability	Model Number	App. Wgt. (lbs)	Voltage	Over Load Prot.	F. L. Amps @230 V	Service Factor	% F.L. Eff.	"C" Dim. (Inches)	♥Notes
1/3	3450	S56	**E101639.00**	√	A4T34DJ4D	20	230/460	Auto.	1.4	1.35	69.5	11.25	S, MX, 33
1/3	1725	S56	**E100210.00**	√	C4T17DJ25	32	230/460	None	1.2	1.35	73.4	12.31	S, MX
1/3	1725	S56H	**E101520.00**	√	A4T17DJ26	17	230/460	Auto.	1.2	1.35	73.4	12.31	S, MX, 33
1/2	3450	S56	**E101640.00**	C/A	————		230/460	Auto.	---	---	73.4	---	---
1/2	1725	56	**E119360.00**	√	C6T17DR40	23	230/460	T-Stats	2.0	1.25	78.2	10.82	S, US
1/2	1725	56	**E119879.00**	√	56T17DRS70001A3A	25	230/460	Auto.	1.8	1.25	78.2	11.54	S, MX, 33
3/4	3450	S56	**E101773.00**	√	C4T34DJ8	20	230/460	T-Stats	2.4	1.25	76.80	10.81	S, US
3/4	3450	S56	**E101641.00**	√	A4T34DK9	20	230/460	Auto.	2.4	1.25	79.0	10.81	S, US, 33
3/4	1725	56	**E119361.00**	√	C6T17DR41	26	230/460	T-Stats	2.4	1.25	81.5	11.82	S, US
3/4	1725	56	**E119880.00**	√	56T17DRS70002A3A	29	230/460	Auto.	2.6	1.25	81.1	12.04	S, MX, 33
1	3450	56	**E114192.00**	√	C6T34DR35	24	230/460	T-Stats	3.2	1.25	77.0	10.82	S, US
1	3450	56	**E113895.00**	C/A	A6T34DR44	25	230/460	Auto.	3.2	1.25	77.0	10.82	S, US, 33
1	1725	56H	**E110052.00**	√	C6T17DR41	24	230/460	T-Stats	3.2	1.15	83.5	13.32	S, US
1	1725	56H	**E111311.00**	√	A6T17DR40	30	230/460	Auto.	3.2	1.15	83.5	13.82	S, US, 33
1 1/2	3450	56H	**E114194.00**	C/A	C6T34DR3	31	230/460	T-Stats	4.0	1.15	84.0	12.82	S, US
1 1/2	3450	56H	**E113896.00**	√	U6T34DR43	32	230/460	Auto.	4.0	1.15	84.0	12.32	S, US, 33
1 1/2	1725	56H	**E110433.00**	√	C6T17DR38	33	230/460	T-Stats	4.8	1.15	86.5	13.82	S, US
1 1/2	1725	56H	**E113846.00**	√	A6T17DR47	42	230/460	Auto.	4.8	1.15	86.5	14.32	S, US, 33
2	3450	56H	**E114196.00**	√	C6T34DR38	46	230/460	T-Stats	4.8	1.15	85.5	13.82	S, US
2	3450	56H	**E113897.00**	√	A6T34DR42	42	230/460	Auto.	4.8	1.15	85.5	14.32	S, US, 33
2	1725	56H	**E114197.00**	√	C6T17DR39	57	230/460	T-Stats	5.8	1.15	86.5	14.32	S, US
2	1725	56H	**E113847.00**	√	A6T17DR48	46	230/460	Auto.	5.8	1.15	86.5	15.32	S, US, 33

Green items are premium efficient.

C/A - Check Availability.

Note: 230/460 Volt motors are suitable for use at 208 Volts 60HZ at 1.0 Service factor.

♥ Note listing on inside back flap.
Specifications are subject to change without notice.

Drip-Proof - Three Phase - Resilient Base - 575 Volts

HP	SYN RPM 60 Hz	NEMA Frame	Catalogue Number	Availability	Model Number	App. Wgt. (lbs)	Voltage	Over Load Prot.	F. L. Amps @575 V	Service Factor	% F.L. Eff.	"C" Dim. (Inches)	♥Notes
1/2	1800	56	**E100828.00**	√	56T17DRS70006A3A	33	575	None	.08	68	1.25	11.45	S, MX
3/4	1800	56	**E100829.00**	√	56T17DRS70005A3A	33	575	None	1.1	75	1.25	11.95	S, MX
1	1800	56H	**E111393.00**	√	C6T17DR49A	37	575	None	1.2	84	1.15	12.82	S, US

Green items are premium efficient.

♥ Note listing on inside back flap.
Specifications are subject to change without notice.

NEMA is a trademark of National Electrical Manufacturers Association and is not owned or controlled by Regal Beloit Corporation.

Three Phase Motors Totally Enclosed

Three Phase Motors – General Purpose – Totally Enclosed
230/460V & 575V Rigid Mount – 1/4 HP – 350 HP
Steel Frame – Cast Iron Frame – Aluminum Frame

- Standard, EPAct and premium efficient ratings
- Inverter-rated
- Class B insulation systems – 42, 48 and 56 frames
- Class F insulation system – 140 frame and higher
- Shielded ball bearings for direct coupled applications (Contact your local sales office for belted load applications)
- Continuous duty
- Dynamically balanced rotors
- Torques exceed NEMA® performance standards
- UL recognized and CSA certified
- WATTSaver®e premium efficient motors
- Cast iron WATTSaver®e motors are Class 1 Div 2 except as noted

NEMA Premium

Applications:
For use where exposure to water, dust and corrosives exists. Ideally suited for use on pumps, compressors, fans, blowers, conveyors, machine tools and other industrial applications.

LEESON® Cast Iron WATTSaver®e Motors
Standard Features
3 HP - 250 HP
IRIS® Inverter Insulation System
10:1 Constant Torque Operation
Ring Terminals on Leads
TEFC Enclosure
ODP Enclosure
Chemical Resistant Paint
Cast Iron Conduit Box
Options
C-Face Kits
D-Flange Kits
Encoder Mounting Provisions
Blower Kit Option
F-2 Mounting by re-assembly
213-5T and 254-6T Frame Brake Kits
Cast Iron Fan Guards
SGR mounting provisions

NEMA and NEMA Premium are trademarks of National Electrical Manufacturers Association and are not owned or controlled by Regal Beloit Corporation..

Three Phase - TEFC - Rigid Base - 230/460 Volts

HP	SYN RPM 60 Hz	NEMA® Frame	Catalogue Number	Availability	Model Number	App. Wgt. (lbs)	Voltage	F. L. Amps @ 230 V	% F.L. Eff.	Service Factor	"C" Dim. (Inches)	♥Notes
1/4	1800	48	**101646.00**	√	C4T17FB9C	15	230/460	1.4	58.0	1.15	9.31	S, MX
1/3	3600	48	**102684.00**	√	C4T34FB5B	21	230/460	1.4	68.0	1.00	8.81	S, US
1/3	1800	48	**101647.00**	√	C4T17FB10C	16	230/460	1.6	64.3	1.15	9.31	S, MX
1/3	1800	S56	**101079.00**	√	C4T17FH6C	22	230/460	1.6	64.3	1.15	9.69	S, MX
1/3	1800	S56	**103019.00**	√	C4T17FH12A	24	230/460	1.3	77.0	1.25	10.19	S, MX
1/3	1800	56	**A009031.00**	√	C6T17FB171A	22	230/460	1.2	74.5	1.15	11.32	S, MX
1/3	1200	56	**110441.00**	√	C6T11FB5E	26	230/460	1.6	65.0	1.15	10.48	S, US
1/2	3600	48	**100905.00**	√	C4T34FB2D	21	230/460	1.8	75.0	1.00	9.56	S, US
1/2	1800	48	**100961.00**	√	C4T17FB4C	18	230/460	1.9	73.0	1.15	9.56	S, MX
1/2	1800	S56	**100913.00**	√	C4T17FH1D	18	230/460	2.0	73.0	1.15	9.94	S, MX
1/2	1800	S56	**103020.00**	√	C4T17FH13A	27	230/460	1.8	77.0	1.25	10.69	S, MX
1/2	1200	56	**110353.00**	√	C6T11FB2	26	230/460	2.4	70.0	1.15	10.98	S, US
1/2	900	56	**114618.00**	√	C6T8FB11	31	230/460	3.0	68.0	1.15	11.81	S, US
3/4	3600	48	**100960.00**	√	C4T34FB3	21	230/460	2.4	79.0	1.00	10.44	S, US
3/4	3600	56	**110313.00**	√	C6T34FB2	22	230/460	2.4	75.5	1.15	10.81	S, US
3/4	1800	56	**A009034.00**	√	C6T17FB168A	26	230/460	2.8	80.0	1.15	11.82	S, MX
3/4	1800	56	**110034.00**	√	C6T17FB1	22	230/460	2.8	77.0	1.15	10.81	S, US
3/4	1800	56	**116739.00**	√	C6T17FB152	31	230/460	2.4	81.5	1.25	11.31	S, US
3/4	1200	56	**110275.00**	√	C6T11FB3	33	230/460	3.0	75.5	1.15	11.81	S, US
3/4	1200	143T	**121009.00**	√	C143T11FB2	34	230/460	3.0	75.5	1.15	12.75	S, US
3/4	900	145T	**121199.00**	√	C145T8FB5	41	230/460	3.1	72.0	1.15	12.75	S, US

Green items are premium efficient.

Note: 230/460 Volt motors are suitable for use at 208 Volts 60HZ at 1.0 Service factor.

Continued on next page.

♥ Note listing on inside back flap.
Specifications are subject to change without notice.

NEMA is a trademark of National Electrical Manufacturers Association and is not owned or controlled by Regal Beloit Corporation.

Three Phase Motors
Totally Enclosed Fan Cooled
General Purpose - Standard and Premium Efficient - Three Phase Motors

Three Phase - TEFC - Rigid Base - 230/460 Volts

HP	SYN RPM 60 Hz	NEMA® Frame	Catalogue Number	Availability	Model Number	App. Wgt. (lbs)	Voltage	F. L. Amps @ 230 V	% F.L. Eff.	Service Factor	"C" Dim. (Inches)	♥Notes
1	3600	56	**110145. 00**	√	C6T34FB1E	24	230/460	3.2	77.0	1.15	10.81	S, US
1	3600	56	**116129.00**	√	C6T34FB49C	27	230/460	2.8	80.0	1.25	10.98	S, US
1	1800	56	**110035.00**	D	C6T17FB2E	25	230/460	3.8	77.0	1.15	11.98	S, US
1	1800	56HZ	**115830.00**	D	C6T17FB120B	34	230/460	3.8	77.0	1.15	12.43	S, US, 5
1	1800	56H	**116757.00**	√	C6T17FB151	32	230/460	3.2	85.5	1.25	12.81	S, US
1	1800	143T	**120921.00**	√	C143T17FB13	32	230/460	3.2	85.5	1.25	12.93	S, US
1	1800	145T	**171640.00**	√	C145T17FB25AA	61	230/460	3.2	85.5	1.15	12.48	C, CN
1	1200	56	**119395.00**	√	C6T11FB28	38	230/460	3.8	82.5	1.15	12.98	S, US
1	1200	145T	**121520.00**	√	C145T11FB20	47	230/460	3.8	82.5	1.25	13.75	S, US
1	1200	145T	**171643.00**	√	C145T11FB25	58	230/460	3.8	75.5	1.25	13.46	C, CN
1	900	182T	**132428.00**	√	C182T8FB14	70	230/460	4.2	75.5	1.15	12.97	S, MX
1 1/2	3600	56	**110745.00**	D	C6T34FB16F	30	230/460	4.2	81.5	1.15	11.81	S, US
1 1/2	3600	56	**116758.00**	√	C6T34FB50B	33	230/460	4.0	84.0	1.25	12.81	S, US
1 1/2	3600	143T	**121518.00**	√	C143T34FB1	33	230/460	4.0	84.0	1.25	12.93	S, US
1 1/2	3600	145T	**171642.00**	√	C143T34FB5	49	230/460	4.0	84.0	1.15	12.48	C, CN
1 1/2	1800	56	**116759.00**	√	C6T17FB150	34	230/460	4.8	86.5	1.25	12.98	S, US
1 1/2	1800	145T	**120922.00**	√	C145T17FB33	34	230/460	4.8	86.5	1.15	13.75	S, US
1 1/2	1800	145T	**171646.00**	√	C145T17FB78	69	230/460	4.8	86.5	1.15	13.46	C, CN
1 1/2	1200	182T	**131980.00**	√	C182T11FB9	89	230/460	6.0	87.5	1.15	14.41	S, MX
1 1/2	1200	182T	**171644.00**	√	C182T11FB15A	93	230/460	4.8	87.5	1.15	16.14	C, CN
1 1/2	900	184T	**132429.00**	√	C184T8FB7	72	230/460	5.7	78.9	1.15	14.96	S, MX

Shaded frame indicates cast iron construction.

Continued on next page.

Green items are premium efficient.

D - Item to be discontinued once inventory is depleted.

Note: 230/460 Volt motors are suitable for use at 208 Volts 60HZ at 1.0 Service factor.

♥ Note listing on inside back flap.
Specifications are subject to change without notice.

NEMA is a trademark of National Electrical Manufacturers Association and is not owned or controlled by Regal Beloit Corporation.

LEESON®

Three Phase Motors
Totally Enclosed Fan Cooled
General Purpose - Standard and Premium Efficient - Three Phase Motors

Three Phase - TEFC - Rigid Base - 230/460 Volts

HP	SYN RPM 60 Hz	NEMA® Frame	Catalogue Number	Availability	Model Number	App. Wgt. (lbs)	Voltage	F. L. Amps @ 230 V	% F.L. Eff.	Service Factor	"C" Dim. (Inches)	♥Notes
2	3600	56	**111916.00**	D	C6T34FB24E	33	230/460	5.6	82.5	1.15	12.31	S, US
2	3600	56	**116760.00**	√	C6T34FB51	44	230/460	4.8	86.5	1.25	13.31	S, US
2	3600	145T	**121519.00**	√	C145T34FB33	44	230/460	4.8	85.5	1.25	13.75	S, US
2	3600	145T	**171648.00**	√	C145T34FB37	56	230/460	4.8	85.5	1.15	13.46	C, CN
2	1800	56	**115828.00**	D	C6T17FB119C	37	230/460	6.2	81.5	1.15	12.75	S, US
2	1800	56H	**116761.00**	√	C6T17FB154	45	230/460	5.8	86.5	1.25	13.48	S, US
2	1800	145T	**120923.00**	√	C145T17FB32	45	230/460	5.8	86.5	1.25	14.76	S, US
2	1800	145T	**171647.00**	√	C145T17FB79	68	230/460	5.8	86.5	1.15	13.46	C, CN
2	1200	184T	**131981.00**	√	C184T11FB20	89	230/460	7.2	88.5	1.15	15.96	S, MX
2	1200	184T	**171645.00**	√	C184T11FB29A	100	230/460	7.0	88.5	1.15	16.80	C, CN
2	900	---	*	C/A	————	---	230/460	---	---	---	---	C,CA
3	3600	56H	**114614.00**	D	C6T34FB35D	40	230/460	7.6	84.0	1.15	13.25	S, US, 5
3	3600	56H	**119396.00**	√	C6T34FB54	43	230/460	8.0	86.5	1.15	13.48	S, US, 6
3	3600	145T	**121968.00**	√	C145T34FB49	48	230/460	8.0	86.5	1.15	13.93	S, US
3	3600	182T	**131985.00**	√	C182T34FB72	66	230/460	7.6	86.5	1.25	13.96	S, MX
3	3600	182T	**170622.00**	√	C182T34FB8A	66	230/460	9.0	86.5	1.15	16.14	C, CN
3	1800	182T	**131463.00**	√	C182T17FB32	80	230/460	7.8	89.5	1.15	13.96	S, MX
3	1800	182T	**171320.00**	√	C182T17FB42	108	230/460	7.8	89.5	1.15	15.89	C, CN
3	1200	213T	**171378.00**	√	C213T11FB1	166	230/460	9.4	89.5	1.15	18.19	C, CN
3	900	---	*	C/A	————	---	230/460	---	---	---	---	C, CA
5	3600	184T	**131987.00**	√	C184T34FB20	88	230/460	12.0	88.5	1.25	14.96	S, MX
5	3600	184T	**170623.00**	√	C184T34FB23A	85	230/460	12.0	88.5	1.15	16.80	C, CN
5	1800	184T	**131464.00**	√	C184T17FB42	87	230/460	12.8	89.5	1.15	14.96	S, MX
5	1800	184T	**171322.00**	√	C184T17FB43	112	230/460	12.8	89.5	1.15	16.80	C, CN
5	1200	215T	**171379.00**	√	C215T11FB1	176	230/460	14.4	89.5	1.15	19.61	C, CN
5	900	254T	**G151355.22**	C/A	C254T8FB5	188	230/460	14.4	88.3	1.15	23.23	C, CA
7 1/2	3600	184T	**171767.00**	√	C184T34FB25A	115	230/460	17.0	91.0	1.15	16.8	C, CN
7 1/2	3600	213T	**170158.00**	√	C213T34FB42	156	230/460	18.0	91.0	1.15	18.19	C, CN
7 1/2	3600	213T	**140756.00**	√	C213T34FB1	156	230/460	17.8	90.2	1.15	19.84	S, MX
7 1/2	1800	213T	**140450.00**	√	C213T17FB6	153	230/460	21.4	91.7	1.25	18.70	S, MX
7 1/2	1800	213T	**170157.00**	√	C213T17FB43	158	230/460	18.6	91.7	1.50	18.19	C, CN
7 1/2	1200	254T	**170122.00**	√	C254T11FB3	259	230/460	22.2	91.7	1.15	23.19	C, CN
7 1/2	900	256T	**G151356.22**	C/A	C256T8FB42	300	230/460	20.0	87.7	1.15	24.96	C, CA

Shaded frame indicates cast iron construction.

Continued on next page.

Green items are premium efficient.

D - Item to be discontinued once inventory is depleted.
C/A - Check Availability.
* Motors will be assigned a catalogue/serial number at time of manufacture. Call for pricing.

Note: 230/460 Volt motors are suitable for use at 208 Volts 60HZ at 1.0 Service factor.

♥ Note listing on inside back flap.
Specifications are subject to change without notice.

NEMA is a trademark of National Electrical Manufacturers Association and is not owned or controlled by Regal Beloit Corporation.

Three Phase Motors
Totally Enclosed Fan Cooled
General Purpose - Standard and Premium Efficient - Three Phase Motors

Three Phase - TEFC - Rigid Base - 230/460 Volts

HP	SYN RPM 60 Hz	NEMA® Frame	Catalogue Number	Availability	Model Number	App. Wgt. (lbs)	Voltage	F. L. Amps @ 230 V	% F.L. Eff.	Service Factor	"C" Dim. (Inches)	♥Notes
10	3600	215T	**140755.00**	√	C215T34FB11	170	230/460	23.6	91.7	1.15	21.09	S, MX
10	3600	215T	**170159.00**	√	C215T34FB47	181	230/460	23.4	91.7	1.15	19.61	C, CN
10	1800	215T	**140451.00**	√	C215T17FB18	161	230/460	26.6	91.7	1.25	19.70	S, MX
10	1800	215T	**170140.00**	√	C215T17FB43	196	230/460	25.0	91.7	1.15	19.61	C, CN
10	1200	256T	**170123.00**	√	C256T11FB4	310	230/460	29.0	91.7	1.15	24.92	C, CN
10	900	284T	**G150282.22**	√	C284T8FB2	346	230/460	26.0	90.2	1.15	26.26	C, CA
15	3600	215T	**170615.00**	√	C215T34FB13	223	230/460	35.0	92.4	1.15	19.61	C, CN
15	3600	254T	**170062.00**	√	C254T34FB4	292	230/460	35.0	92.4	1.15	23.19	C, CN
15	1800	254T	**170066.00**	√	C254T17FB10	290	230/460	36.0	92.4	1.15	23.19	C, CN
15	1200	284T	**170068.00**	√	C284T11FB4	380	230/460	40.6	92.4	1.15	26.26	C, CN
15	900	286T	**G150261.22**	C/A	————	480	230/460	40.0	91.0	1.15	27.83	C, CA
15	720	---	*	C/A	————	---	230/460	---	---	---	---	C, CN
20	3600	256T	**170033.00**	√	C256T34FB10	332	230/460	46.0	92.4	1.15	24.92	C, CN
20	1800	256T	**170007.00**	√	C256T17FB4	332	230/460	49.0	93.0	1.15	24.92	C, CN
20	1200	286T	**170001.00**	√	C286T11FB6	406	230/460	54.0	91.7	1.15	27.83	C, CN
20	900	324T	**G150263.22**	C/A	C324T8FB3	640	230/460	54.0	91.0	1.15	29.53	C, CA
20	720	---	*	C/A	————	---	230/460	---	---	---	---	C, CN
25	3600	284TS	**170035.00**	√	C284T34FB5	393	230/460	56.8	93.0	1.15	24.88	C,CN
25	1800	284T	**170011.00**	√	C284T17FB5	395	230/460	59.0	93.6	1.15	26.26	C,CN
25	1200	324T	**170003.00**	√	C324T11FB3	555	230/460	66.0	93.0	1.15	29.53	C,CN
25	900	326T	**G150265.22**	C/A	C326T8FB2	700	230/460	63.0	90.2	1.15	31.02	C,CA
25	720	---	*	C/A	————	---	230/460	---	---	---	---	C, CA
30	3600	286TS	**170037.00**	√	C286T34FB4	423	230/460	67.0	93.0	1.15	26.46	C,CN
30	1800	286T	**170015.00**	√	C286T17FB5	442	230/460	70.0	94.1	1.15	27.83	C,CN
30	1200	326T	**170005.00**	√	C326T11FB3	624	230/460	77.0	93.6	1.15	31.02	C,CN

Shaded frame indicates cast iron construction.

Green items are premium efficient.

C/A - Check Availability.

* Motors will be assigned a catalogue/serial number at time of manufacture. Call for pricing.

Note: 230/460 Volt motors are suitable for use at 208 Volts 60HZ at 1.0 Service factor.

Continued on next page.

♥ Note listing on inside back flap.
Specifications are subject to change without notice.

NEMA is a trademark of National Electrical Manufacturers Association and is not owned or controlled by Regal Beloit Corporation.

LEESON®

Three Phase Motors
Totally Enclosed Fan Cooled
General Purpose - Standard and Premium Efficient - Three Phase Motors

Three Phase - TEFC - Rigid Base - 230/460 Volts

HP	SYN RPM 60 Hz	NEMA® Frame	Catalogue Number	Availability	Model Number	App. Wgt. (lbs)	Voltage	F. L. Amps @ 230 V	% F.L. Eff.	Service Factor	"C" Dim. (Inches)	♥Notes
40	3600	324TS	**170039.00**	√	C324T34FB3	510	230/460	89.0	93.6	1.15	28.03	C, CN
40	1800	324T	**170019.00**	√	C324T17FB5	539	230/460	92.0	94.1	1.15	29.53	C, CN
40	1200	364T	**170096.00**	√	C364T11FB4	788	230/460	102.0	94.1	1.15	32.64	C, CN
40	900	365T	**150269.22**	C/A	————	900	230/460	120.0	91.9	1.15	33.62	C, CA
40	720	---	*	C/A	————	---	230/460	---	---	---	---	C, CA
50	3600	326TS	**170041.00**	√	C326T34FB4	564	230/460	111.0	94.5	1.15	29.53	C, CN
50	1800	326T	**170023.00**	√	C326T17FB7	587	230/460	117.0	94.5	1.15	31.02	C, CN
50	1200	365T	**170097.00**	√	C365T11FB5	682	230/460	124.0	94.1	1.15	33.62	C, CN
50	900	---	*	C/A	————	---	230/460	---	---	---	---	C, CA
50	720	---	*	C/A	————	---	230/460	---	---	---	---	C, CA
60	3600	364TS	**170043.00**	√	C364T34FB3	758	230/460	136.0	94.1	1.15	30.51	C, CN
60	1800	364T	**170027.00**	√	C364T17FB6	899	230/460	137.0	95.4	1.15	32.64	C, CN
60	1200	404T	**170098.00**	√	C404T11FB3	1035	230/460	142.0	94.5	1.15	36.42	C, CN
60	900	---	*	C/A	————	---	230/460	---	---	---	---	C, CA
60	720	---	*	C/A	————	---	230/460	---	---	---	---	C, CA
75	3600	365TS	**170045.00**	√	C365T34FB3	800	230/460	169.0	94.5	1.15	31.50	C, CN
75	1800	365T	**170031.00**	√	C365T17FB4	1028	230/460	171.0	95.8	1.15	33.62	C, CN
75	1200	405T	**170099.00**	√	C405T11FB5	995	230/460	176.0	95.0	1.15	37.91	C, CN
75	900	---	*	C/A	————	---	230/460	---	---	---	---	C, CA
75	720	---	*	C/A	————	---	230/460	---	---	---	---	C, CA
100	3600	405TS	**170160.00**	√	C405345FB5DAA	1050	230/460	214	95.0	1.15	34.92	C, CN
100	1800	405T	**170087.00**	√	C405T17FB4	1090	230/460	225.0	95.4	1.15	37.91	C, CN
100	1200	444T	**170256.00**	√	C444T11FB6AA	1975	460	121.0a	95.0	1.25	42.87	C, CN
100	900	---	*	C/A	————	---	460	---	---	---	---	C, CA
125	3600	444TS	**171580.00**	√	C444T34FB8	1373	460	132.0a	95.0	1.25	39.10	C, CN
125	1800	444T	**170369.00**	√	C444T17FB5	1576	460	137.0a	95.4	1.15	42.87	C, CN
125	1200	445T	**170260.00**	√	C445T11FB5	1596	460	155.0a	95.4	1.15	44.88	C, CN
150	3600	445TS	**171578.00**	√	C445T34FB3	1445	460	163a	95.0	1.15	41.11	C, CN
150	1800	445T	**170371.00**	√	C445T17FB8	1627	460	163a	95.8	1.15	44.88	C, CN
150	1200	447T	**171315.00**	√	C447T11FB1	2230	460	185a	95.8	1.25	48.00	C, CN
200	3600	447TS	**171579.00**	√	C447T34FB3	2100	460	216a	95.4	1.25	48.00	C, CN
200	1800	447T	**170352.00**	√	C447T17FB8	2785	460	216a	96.2	1.15	48.00	C, CN
200	1200	449T	**171316.00**	√	C449T11FB1	2542	460	241a	96.2	1.15	52.80	C, CN
250	1800	449T	**170624.00**	√	C449T17FB7A	2850	460	271.0a	96.2	1.15	52.90	C, CN, 84
300	1800	449T	**171529.00**	√	C449T17FB12	2593	460	325a	96.2	1.15	52.90	C, CN, 84
350	1800	449T	**171530.00**	√	C449T17FB13	2732	460	390a	96.2	1.15	52.90	C, CN, 84

Shaded frame indicates cast iron construction.

♥ Note listing on inside back flap.
Specifications are subject to change without notice.

Green items are premium efficient.

C/A - Check Availability.

* Motors will be assigned a catalogue/serial number at time of manufacture. Call for pricing.
a=Amps at 460 Volts

Note 84: Does not meet Class I, Division 2, Certification.

Note: 230/460 Volt motors are suitable for use at 208 Volts 60HZ at 1.0 Service factor.

NEMA is a trademark of National Electrical Manufacturers Association and is not owned or controlled by Regal Beloit Corporation.

Three Phase C Face Motors
Totally Enclosed

General Purpose - Standard and Premium Efficiency - Three Phase Motors

Three Phase - Totally Enclosed - C Face Less Base - 230/460 Volts

HP	SYN RPM 60 Hz	NEMA® Frame	Catalogue Number	Availability	Model Number	App. Wgt. (lbs)	Voltage	F. L. Amps @ 230 V	% F.L. Eff.	Service Factor	"C" Dim. (Inches)	♥Notes
1/6	1800	48CZ	**102662.00**	√	C4T17FC31	15	230/460	0.7	71.0	1.00	9.44	S, MX
1/4	3600	48CZ	**101965.00**	√	C4T34NC11	15	230/460	1.0	67.0	1.00	9.03	S, US, 12
1/4	1800	48CZ	**101966.00**	√	C4T17NC35	18	230/460	1.0	78.0	1.15	9.31	S, MX, 12
1/4	1800	48CZ	**101981.00**	√	C4T17FC19	17	230/460	1.4	58.0	1.15	8.94	S, MX
1/4	1800	S56C	**101648.00**	√	C4T17NC28	17	230/460	1.0	78.0	1.15	9.56	S, MX, 12
1/4	1800	S56C	**101767.00**	√	C4T17FC9	19	230/460	1.4	58.0	1.15	9.69	S, MX
1/3	3600	56C	**110446.00**	√	C6T34NC2	20	230/460	1.2	77.0	1.15	9.90	S, US, 12
1/3	1800	48CZ	**102664.00**	√	C4T17FC30	20	230/460	1.6	64.3	1.15	9.19	S, MX
1/3	1800	S56C	**101769.00**	√	C4T17FC10	20	230/460	1.6	64.3	1.15	9.69	S, MX
1/3	1800	S56C	**102863.00**	√	C4T17NC47	19	230/460	1.3	77.0	1.15	9.56	S, MX, 12
1/3	1800	S56C	**102696.00**	√	C4T17FC33	22	230/460	1.3	77.0	1.25	10.19	S, MX
1/3	1800	56C	**A009045.00**	√	C6T17FC241A	22	230/460	1.3	74.5	1.15	11.32	S, MX
1/3	1200	48C	**101291.00**	√	C4T11NC1	20	230/460	1.8	73.0	1.00	9.56	S, MX
1/3	1200	56C	**113311.00**	√	C6T11FC16	22	230/460	1.6	65.0	1.15	10.81	S, US
1/2	3600	48C	**100449.00**	√	C4T34NC4	23	230/460	1.6	67.0	1.00	10.06	S, US, 12
1/2	3600	56C	**110144.00**	√	C6T34NC1	25	230/460	1.6	82.5	1.15	10.40	S, US, 12
1/2	3600	56C	**114176.00**	√	C6T34FC42	19	230/460	2.0	72.0	1.15	10.31	S, US
1/2	1800	S56C	**102861.00**	√	C4T17NC46	23	230/460	1.8	77.0	1.15	10.06	S, MX, 12
1/2	1800	S56C	**102860.00**	√	C4T17FC40	19	230/460	2.0	73.0	1.15	10.19	S, MX
1/2	1800	S56C	**101780.00**	√	C4T17FC12	25	230/460	1.8	77.0	1.15	10.69	S, MX
1/2	1200	56C	**110163.00**	√	C6T11FC1	25	230/460	2.4	70.0	1.15	11.31	S, US
1/2	1800	56C	**A009046.00**	√	C6T17FC243A	31	230/460	1.6	78.5	1.15	12.32	S, MX
3/4	3600	56C	**110448.00**	√	C6T34FC9	21	230/460	2.4	75.5	1.15	10.81	S, US
3/4	1800	56C	**110047.00**	√	C6T17FC1	22	230/460	2.8	77.0	1.15	10.81	S, US
3/4	1800	56C	**114213.00**	√	C6T17FC114	27	230/460	2.7	81.5	1.15	11.31	S, US
3/4	1800	56C	**A009047.00**	√	C6T17FC237A	26	230/460	2.8	80.0	1.15	10.98	S, MX
3/4	1200	143TC	**120097.00**	√	C143T11FC1	32	230/460	3.0	80.0	1.15	10.88	S, US
3/4	1200	56C	**112378.00**	√	C6T11FC10	29	230/460	3.0	75.5	1.15	11.81	S, US

Green items are premium efficient.

C/A - Check Availability.

Note 12: TENV (Totally enclosed non-vented).

Note: 230/460 Volt motors are suitable for use at 208 Volts 60HZ at 1.0 Service factor.

Continued on next page.

♥ Note listing on inside back flap.
Specifications are subject to change without notice.

NEMA is a trademark of National Electrical Manufacturers Association and is not owned or controlled by Regal Beloit Corporation.

LEESON®

Three Phase C Face Motors Totally Enclosed

General Purpose - Standard and Premium Efficiency - Three Phase Motors

Three Phase - Totally Enclosed - C Face Less Base - 230/460 Volts

HP	SYN RPM 60 Hz	NEMA® Frame	Catalogue Number	Availability	Model Number	App. Wgt. (lbs)	Voltage	F. L. Amps @ 230 V	% F.L. Eff.	Service Factor	"C" Dim. (Inches)	♥Notes
1	3600	56C	**110112.00**	√	C6T34FC6	21	230/460	3.2	77.0	1.15	10.81	S, US
1	3600	56C	**116748.00**	√	C6T34FC97	29	230/460	2.8	80.0	1.25	10.98	S, US
1	1800	56C	**114638.00**	√	C6T17FC132	34	230/460	3.4	85.5	1.15	12.81	S, US
1	1800	143TC	**121067.00**	√	C143T17FC16	36	230/460	3.4	85.5	1.15	12.92	S, US
1	1200	56C	**116749.00**	√	C6T11FC29	39	230/460	3.8	82.5	1.25	12.99	S, US
1	1200	145TC	**122165.00**	√	C145T11FC12	39	230/460	3.8	82.5	1.15	13.42	S, US
1 1/2	3600	56C	**116750.00**	√	C6T34FC98C	33	230/460	4.0	84.0	1.25	11.98	S, US
1 1/2	3600	143TC	**122166.00**	√	C143T34FC22	32	230/460	4.0	84.0	1.15	12.42	S, US
1 1/2	1800	56C	**116743.00**	√	C6T17FC209	41	230/460	4.8	86.5	1.25	13.31	S, US
1 1/2	1800	145TC	**121066.00**	√	C145T17FC37	41	230/460	4.8	86.5	1.15	13.75	S, US
1 1/2	1200	56C	**132596.00**	√	C182T11FC7	86	230/460	6.0	87.5	1.15	13.90	S, MX, ♦
1 1/2	1200	182TC	**G132249.00**	D	C182T11FC4	82	230/460	5.6	85.5	1.15	14.96	S, MX
1 1/2	1200	182TC	**132431.00**	√	C182T11FC113	87	230/460	5.2	87.5	1.15	14.47	S, MX
2	3600	56C	**116751.00**	√	C6T34FC94	44	230/460	4.8	85.5	1.25	12.99	S, US
2	3600	145TC	**122167.00**	√	C145T34FC44	48	230/460	4.8	85.5	1.15	13.42	S, US
2	1800	56C	**116744.00**	√	C6T17FC210	45	230/460	5.8	86.5	1.25	13.82	S, US
2	1800	56C	**110451.00**	D	C6T17FC9H	34	230/460	6.2	81.5	1.15	12.81	S, US
2	1800	145TC	**121065.00**	√	C145T17FC38	45	230/460	5.8	86.5	1.25	14.26	S, US
2	1200	184TC	**132430.00**	√	C184T11FC112	80	230/460	6.4	88.5	1.15	14.97	S, MX
3	3600	56C	**119414.00**	√	C6T34FC123	44	230/460	8.0	86.5	1.15	13.86	S, US
3	3600	145TC	**122171.00**	√	C145T34FC45	49	230/460	8.0	86.5	1.15	13.92	S, US
3	3600	182TC	**132433.00**	√	C182T34FC7	60	230/460	7.8	86.5	1.15	12.97	S, MX
3	1800	56C	**132595.00**	√	C182T17FC47	72	230/460	7.8	89.5	1.15	12.52	S, MX, ♦
3	1800	182TC	**131503.00**	√	C182T17FC26	72	230/460	7.8	89.5	1.15	14.96	S, MX
3	1200	213TC	**141231.00**	√	C213T11FC4A	145	230/460	8.8	89.5	1.15	19.46	S, MX
5	3600	184TC	**132434.00**	√	C184T34FC28	99	230/460	12.0	88.5	1.15	14.97	S, MX
5	1800	184TC	**131501.00**	√	C184T17FC29	90	230/460	12.8	89.5	1.15	15.97	S, MX
5	1200	215TC	**141232.00**	√	C215T11FC77	156	230/460	14.0	89.5	1.15	20.96	S, MX
7 1/2	3600	184TC	**132561.00**	√	C184T34FC32	102	230/460	16.8	89.5	1.00	15.97	S, MX
7 1/2	3600	213TC	**141234.00**	√	C213T34FC1	158	230/460	18.6	89.5	1.00	19.46	S, MX
7 1/2	1800	213TC	**140486.00**	√	C213T17FC7	144	230/460	21.4	91.7	1.25	18.70	S, MX
10	3600	215TC	**141233.00**	√	215T34FC7	112	230/460	23.6	90.2	1.15	20.96	S, MX
10	1800	215TC	**140484.00**	√	C215T17FC4	160	230/460	26.6	91.7	1.25	19.70	S, MX
15	3600	215TC	**141235.00**	√	C215T34FC8	165	230/460	35.0	91.0	1.15	20.96	S, MX

Green items are premium efficient.

D - Item to be discontinued once inventory is depleted.

♦ Note: Motor 132596.00 mounts like a NEMA 56C frame, having a barrel diameter of a 180 frame motor.

♦ Note: Motor 132595.00 mounts like a NEMA 56C frame, having a barrel diameter of a 180 frame motor.

Note: 230/460 Volt motors are suitable for use at 208 Volts 60HZ at 1.0 Service factor.

♥ Note listing on inside back flap.
Specifications are subject to change without notice.

NEMA is a trademark of National Electrical Manufacturers Association and is not owned or controlled by Regal Beloit Corporation.

Three Phase C Face Motors Totally Enclosed

General Purpose - Standard and Premium Efficiency - Three Phase Motors

Three Phase - Totally Enclosed - C Face With Base - 230/460 Volts

HP	SYN RPM 60 Hz	NEMA® Frame	Catalogue Number	Availability	Model Number	App. Wgt. (lbs)	Voltage	F. L. Amps @ 230 V	% F.L. Eff.	Service Factor	"C" Dim. (Inches)	♥Notes
1/3	1800	S56C	**102921.00**	√	C4T17NK3	18	230/460	1.3	77.0	1.15	9.56	S, MX,12
1/3	1800	S56C	**102922.00**	√	C4T17FK11	19	230/460	1.3	77.0	1.15	10.19	S, MX
1/3	1800	S56C	**102697.00**	√	C4T17FK5	22	230/460	1.3	77.0	1.25	10.19	S, MX
1/2	3600	56C	**110182.00**	C/A	C6T34NK1E	26	230/460	1.6	82.5	1.15	10.4	S, MX,12
1/2	3600	56C	**114142.00**	√	C6T34FK46	21	230/460	2.6	68.0	1.15	10.81	S, US
1/2	1800	S56C	**102919.00**	√	C4T17NK2	22	230/460	2.0	77.0	1.15	10.06	S, MX,12
1/2	1800	S56C	**102917.00**	√	C4T17FK10	19	230/460	2.0	73.0	1.15	10.19	S, MX
1/2	1800	S56C	**102024.00**	√	C4T17FK2	23	230/460	1.8	77.0	1.15	10.69	S, MX
1/2	1200	56C	**110914.00**	√	C6T11FK1	25	230/460	2.4	70.0	1.15	11.31	S, US
3/4	3600	56C	**110915.00**	√	C6T34FK6	23	230/460	2.4	75.5	1.15	10.81	S, US
3/4	1800	56C	**110916.00**	√	C6T17FK5	22	230/460	2.8	77.0	1.15	10.81	S, US
3/4	1800	56C	**114624.00**	√	C6T17FK58	25	230/460	2.7	81.5	1.25	11.31	S, US
3/4	1200	56C	**116340.00**	√	C6T11FK12	29	230/460	3.0	75.5	1.15	11.81	S, US
3/4	1200	143TC	**120485.00**	√	C143T11FK2	34	230/460	3.0	75.5	1.15	13.25	S, US
1	3600	56C	**110181.00**	√	C6T34FK1	24	230/460	3.2	77.0	1.15	10.81	S, US
1	1800	56C	**116745.00**	√	C6T17FK98	34	230/460	3.4	85.5	1.25	12.81	S, US
1	1800	143TC	**121179.00**	√	C143T17FK9	34	230/460	3.4	85.5	1.15	13.25	S, US
1	1200	145TC	**121936.00**	√	C145T11FK7	47	230/460	3.8	81.5	1.25	13.75	S, US
1 1/2	3600	56C	**119416.00**	√	C6T34FK131	32	230/460	4.0	84.0	1.15	11.98	S, US
1 1/2	3600	143TC	**121672.00**	√	C143T34FK15	33	230/460	3.6	84.0	1.25	13.25	S, US
1 1/2	1800	56C	**116746.00**	√	C6T17FK96	37	230/460	5.6	86.5	1.25	13.31	S, US
1 1/2	1800	145TC	**121180.00**	√	C145T17FK26	37	230/460	5.6	86.5	1.15	13.75	S, US
1 1/2	1800	145TC	**171753.00**	√	C143T17FK25A	54	230/460	4.8	86.5	1.15	13.46	C, CN
1 1/2	1200	182TC	**132435.00**	√	C182T11FK2	89	230/460	5.2	87.5	1.15	14.47	S, MX
2	3600	56C	**119417.00**	√	C6T34FK132	39	230/460	4.8	85.5	1.15	12.98	S, US
2	3600	145TC	**121673.00**	√	C145T34FK39	44	230/460	4.8	85.5	1.25	13.75	S, US
2	1800	56HC	**116747.00**	√	C6T17FK97	43	230/460	5.8	86.5	1.25	13.82	S, US
2	1800	145TC	**121181.00**	√	C145T17FK27	43	230/460	5.8	86.5	1.25	14.26	S, US
2	1800	145TC	**171754.00**	√	C145T17FK67A	58	230/460	5.8	86.5	1.15	13.46	C, CN
2	1200	184TC	**132243.00**	√	C184T11FK6	93	230/460	6.4	88.7	1.15	14.47	S, MX

Shaded frame indicates cast iron construction.

Green items are premium efficient.

C/A - Check Availability.

Note 12: TENV (Totally enclosed non-vented).

Note: 230/460 Volt motors are suitable for use at 208 Volts 60HZ at 1.0 Service factor.

Continued on next page.

♥ Note listing on inside back flap.
Specifications are subject to change without notice.

NEMA is a trademark of National Electrical Manufacturers Association and is not owned or controlled by Regal Beloit Corporation.

LEESON®

Three Phase C Face Motors Totally Enclosed

General Purpose - Standard and Premium Efficiency - Three Phase Motors

Three Phase - Totally Enclosed - C Face With Base - 230/460 Volts

HP	SYN RPM 60 Hz	NEMA® Frame	Catalogue Number	Availability	Model Number	App. Wgt. (lbs)	Voltage	F. L. Amps @ 230 V	% F.L. Eff.	Service Factor	"C" Dim. (Inches)	♥Notes
3	3600	56HC	**119418.00**	√	C6T34FK133	43	230/460	8.0	86.5	1.15	13.48	S, US
3	3600	145TC	**121929.00**	√	C145T34FK43	45	230/460	7.6	86.5	1.15	13.76	S, US
3	3600	182TC	**132079.00**	√	C182T34FK10	70	230/460	7.6	86.5	1.25	14.47	S, MX
3	3600	182TC	**171564.00**	C/A	C182T34FK14	66	230/460	7.2	86.5	1.15	16.76	C, CN
3	1800	56HC	**116399.00**	√	C6T17FK91C	49	230/460	8.6	82.5	1.0	13.81	S, US, 82
3	1800	182TC	**131504.00**	√	C182T17FK14	75	230/460	7.8	90.2	1.15	13.97	S, MX
3	1800	182TC	**171565.00**	√	C182T17FK27	125	230/460	7.8	89.5	1.15	15.89	C, CN
3	1200	215TC	**140834.00**	√	C215T11FK9	170	230/460	9.4	89.5	1.15	18.21	S, MX
5	3600	184TC	**132080.00**	√	C184T34FK32	100	230/460	12.0	88.5	1.25	16.46	S, MX
5	1800	184TC	**171566.00**	√	C184T17FK35	109	230/460	12.8	89.5	1.15	16.80	C, CN
5	1800	184TC	**131502.00**	√	C184T17FK15	99	230/460	12.8	89.5	1.15	15.97	S, MX
7 1/2	3600	184TC	**132313.00**	√	C184T34FK48	103	230/460	17.6	89.5	1.15	15.97	S, MX
7 1/2	3600	215TC	**140770.00**	√	C215T34FK11	160	230/460	17.8	90.2	1.15	20.57	S, MX
7 1/2	3600	213TC	**170166.60**	√	C213T34FK5	147	230/460	18.0	89.5	1.15	18.19	C, CN
7 1/2	1800	213TC	**140521.00**	√	C213T17FK7	144	230/460	21.4	91.7	1.25	18.70	S, MX
71/2	1800	213TC	**170165.00**	√	C213T17FK2A	155	230/460	18.6	91.7	1.15	18.19	C, CN
7 1/2	1200	254TC	**170138.00**	√	C254T11FB9	249	230/460	22.2	91.0	1.15	23.19	C, CN
10	1800	215TC	**170167.00**	√	C215T17FK20A	177	230/460	25.0	91.7	1.15	19.61	C, CN
15	1800	254TC	**171587.00**	√	C254T17FK8A	280	230/460	36.0	92.4	1.15	23.19	C, CN
20	1800	256TC	**171589.00**	√	C256T17FK8A	322	230/460	49.0	93.0	1.15	24.92	C, CN
25	1800	284TC	**171591.00**	√	C284T17FK5A	385	230/460	59.0	93.6	1.15	26.26	C, CN
30	1800	286TC	**171592.00**	√	C286T17FK4A	432	230/460	70.0	94.1	1.15	27.82	C, CN
40	1800	324TC	**171593.00**	√	C324T17FK5A	504	230/460	89.0	93.6	1.15	28.03	C, CN
50	1800	326TC	**171594.00**	√	C326T17FK5A	587	230/460	117.0	94.5	1.15	31.02	C, CN
60	1800	364TC	**171595.00**	√	C364T17FK5A	670	230/460	139	95.4	1.25	32.64	C, CN
75	1800	365TC	**171596.00**	√	C365T17FK6	739	230/460	171	95.8	1.15	33.62	C, CN
100	1800	405TC	**171597.00**	√	C405T17FK2	1076	230/460	225	95.4	1.15	37.91	C, CN

Shaded frame indicates cast iron construction.

Green items are premium efficient.

C/A - Check Availability.

Note 82: 60 Minute Duty.

Note: 230/460 Volt motors are suitable for use at 208 Volts 60HZ at 1.0 Service factor.

♥ Note listing on inside back flap.
Specifications are subject to change without notice.

NEMA is a trademark of National Electrical Manufacturers Association and is not owned or controlled by Regal Beloit Corporation.

Three Phase Motors Totally Enclosed

TENV Motors - Three Phase - Rigid Base

Three Phase - TENV - Rigid Base - 230/460 Volts

HP	SYN RPM 60 Hz	NEMA® Frame	Catalogue Number	Availability	Model Number	App. Wgt. (lbs)	Voltage	F. L. Amps @ 230 V	% F.L. Eff.	Service Factor	"C" Dim. (Inches)	♥Notes
1/6	3600	42	**092014.00**	√	C42T34NB2	13	230/460	0.7	65.0	1.00	7.56	S, US
1/6	1800	42	**092015.00**	√	C42T17NB1	14	230/460	0.9	61.0	1.00	7.81	S, US
1/4	3600	42	**092016.00**	√	C42T34NB3	15	230/460	0.9	62.0	1.00	8.06	S, US
1/4	1800	48	**100123.00**	√	C4T17NB3	16	230/460	1.0	78.0	1.15	9.18	S, MX
1/4	1800	S56	**101649.00**	√	C4T17NH8	16	230/460	1.0	78.0	1.15	9.56	S, MX
1/3	3600	48	**101013.00**	√	C4T34NB3	17	230/460	1.2	72.0	1.15	9.06	S, US
1/3	1800	48	**100443.00**	√	C4T17NB5	19	230/460	1.4	78.0	1.15	9.56	S, MX
1/3	1800	S56	**102920.00**	√	C4T17NH13	20	230/460	1.3	77.0	1.15	9.56	S, MX
1/2	3600	56	**110143.00**	√	C6T34NB1	25	230/460	1.5	67.0	1.15	10.38	S, US
1/2	1800	S56	**102918.00**	√	C4T17NH12	21	230/460	1.8	77.0	1.15	10.06	S, MX
3/4	1800	56	**114309.00**	√	C6T17NB53	30	230/460	2.5	80.0	1.15	10.89	S, US

♥ Note listing on inside back flap.
Specifications are subject to change without notice.

Three Phase Motors Totally Enclosed

Resilient Base Motors - Three Phase General Purpose or Fan & Blower Service

Three Phase - Totally Enclosed - Resilient Base - 230/460 Volts

HP	SYN RPM 60 Hz	NEMA Frame	Catalogue Number	Availability	Model Number	App. Wgt. (lbs)	Voltage	F. L. Amps @ 230 V	% F.L. Eff.	Service Factor	"C" Dim. (Inches)	♥Notes
1/2	1800	56	**111917.00**	√	C6T17NR1C	28	230/460	1.8	78.5	1.15	11.32	S, US, 12
1	1800	56H	**119419.00**	√	C6T17FR3A	38	230/460	3.2	85.5	1.15	13.84	S, US, 6, 13

Green items are premium efficient.

Note 12: TENV
Note 13: TEFC

Note: 230/460 Volt motors are suitable for use at 208 Volts 60HZ at 1.0 Service factor.

♥ Note listing on inside back flap.
Specifications are subject to change without notice.

NEMA is a trademark of National Electrical Manufacturers Association and is not owned or controlled by Regal Beloit Corporation.

LEESON®

Three Phase Motors
Totally Enclosed Fan Cooled
General Purpose - Standard and Premium Efficiency - Three Phase Motor

Three Phase - Totally Enclosed - Rigid Base - 575 Volts

HP	SYN RPM 60 Hz	NEMA® Frame	Catalogue Number	Availability	Model Number	App. Wgt. (lbs)	Voltage	F. L. Amps @ 575V	% F.L. Eff.	Service Factor	"C" Dim. (Inches)	♥Notes
1/4	1800	48	**100510.00**	√	C4T17NB7B	16	575	0.35	78.0	1.15	9.06	S, MX, 12
1/4	1800	S56	**101050.00**	√	C4T17FH2B	15	575	0.5	58.0	1.15	9.69	S, MX
1/4	1800	56	**110956.00**	D	C6T17NB24B	17	575	0.5	67.0	1.15	9.88	S, US, 12
1/3	1800	48	**100511.00**	√	C4T17NB8E	18	575	0.5	78.0	1.15	9.56	S, MX, 12
1/3	1800	S56	**101052.00**	√	C4T17FH4C	19	575	0.6	64.3	1.15	9.69	S, MX
1/3	1800	56	**A009212 .00**	√	C6T17FB167A	22	575	0.6	69.2	1.15	11.32	S,MX
1/3	1200	56	**110704.00**	√	C6T11FB6D	23	575	0.6	65.0	1.15	10.48	S, US
1/2	3600	56	**110714.00**	√	C6T34NB6D	25	575	0.6	82.5	1.15	10.38	S,US, 12
1/2	1800	S56	**101051.00**	√	C4T17FH3C	24	575	0.8	68.0	1.15	9.91	S,MX
1/2	1800	S56	**101668.00**	√	C4T17FH9D	24	575	0.7	77.0	1.15	9.91	S,MX
1/2	1800	56	**110199.00**	√	C6T17NB4E	25	575	0.8	78.5	1.15	10.38	S, US,12
1/2	1800	56	**A009199.00**	√	C6T17FB172A	25	575	0.6	80.0	1.15	12.32	S, MX
1/2	1200	56	**110214.00**	√	C6T11FB1F	27	575	0.9	70.0	1.15	10.89	S, US
1/2	900	56	**111292-22**	√	————	33	575	1.3	---	---	11.81	S, CA
3/4	3600	56	**110354.00**	√	C6T34FB8E	22	575	1.0	75.5	1.15	10.81	S, US
3/4	1800	56	**110178.00**	√	C6T17FB3E	26	575	1.1	77.0	1.15	10.48	S, US
3/4	1800	56	**113972.00**	√	C6T17FB75E	26	575	1.1	81.0	1.15	11.31	S, US
3/4	1800	56	**A009178.00**	√	C6T17FB169A	25	575	1.2	80.0	1.15	11.82	S, MX
3/4	1200	56	**111394.00**	√	C6T11FB8E	32	575	1.2	75.5	1.15	11.48	S, US
3/4	900	145T	**120344-22**	√	————	35	575	1.8	---	---	12.75	S, CA
1	3600	56	**110715.00**	√	C6T34FB15E	23	575	1.3	77.1	1.15	10.81	S, US
1	1800	56	**110206.00**	D	C6T17FB4E	30	575	1.4	78.0	1.15	11.81	S, US
1	1800	56	**A009206.00**	D	C6T17F170A	26	575	1.1	79.0	1.15	12.32	S, MX
1	1800	56	**119539.00**	√	C6T17FB184A	31	575	1.3	85.5	1.15	12.93	S,US
1	1800	56	**113859.00**	√	C6T17FB71F	30	575	1.3	85.5	1.15	10.81	S, US
1	1800	143T	**121937.00**	√	C143T17FB29A	32	575	1.1	85.5	1.15	12.93	S, US
1	1800	143T	**171649.00**	√	C143T17FB27A	58.3	575	1.2	85.5	1.15	13.46	C, CN
1	1200	145T	**121938.00**	√	C145T11FB31A	47	575	1.4	82.5	1.25	13.75	S, US
1	1200	145T	**171650.00**	√	C145T11FB29A	58	575	1.2	82.5	1.15	13.46	C, CN
1 1/2	3600	143T	**121939.00**	√	C145T34FB41A	33	575	1.6	84.0	1.25	13.25	S, US
1 1/2	3600	143T	**171651.00**	√	C143T34FB7A	49	575	1.6	85.5	1.15	13.46	C, CN
1 1/2	1800	56	**110893.00**	D	C6T17FB37G	33	575	2.0	78.5	1.15	12.31	S, US
1 1/2	1800	56	**A009893.00**	D	C6T17FB176A	33	575	1.9	75.0	1.15	12.82	S, MX
1 1/2	1800	56H	**119540.00**	√	C6T17FB185A	33	575	1.9	86.5	1.15	12.98	S, US
1 1/2	1800	145T	**121940.00**	√	C145T17FB90A	34	575	1.8	86.5	1.15	13.43	S,US
1 1/2	1800	145T	**171652.00**	√	C145T17FB84A	61	575	1.8	86.5	1.15	13.46	C, CN
1 1/2	1200	182T	**132251.00**	√	C182T11FB13A	89	575	2.5	87.5	1.15	14.46	S, MX
1 1/2	1200	182T	**171769 .00**	√	C182T11FB34A	93	575	1.8	87.5	1.15	16.14	C, CN
1 1/2	900	184T	*	√	————	---	575	---	---	---	---	S, CA

Shaded frame indicates cast iron construction.

Continued on next page.

Green items are premium efficient.

D - Item to be discontinued once inventory is depleted.
Note 12: TENV

♥ Note listing on inside back flap.
Specifications are subject to change without notice.

NEMA is a trademark of National Electrical Manufacturers Association and is not owned or controlled by Regal Beloit Corporation.

Three Phase Motors
Totally Enclosed Fan Cooled
General Purpose - Standard and Premium Efficiency - Three Phase Motors

Three Phase - Totally Enclosed - Rigid Base - 575 Volts

HP	SYN RPM 60 Hz	NEMA® Frame	Catalogue Number	Availability	Model Number	App. Wgt. (lbs)	Voltage	F. L. Amps @ 575V	% F.L. Eff.	Service Factor	"C" Dim. (Inches)	♥Notes
2	3600	145T	**121941.00**	√	C145T34FB42A	44	575	2.1	85.5	1.25	13.75	S, US
2	3600	145T	**171653.00**	√	C145T34FB40A	54	575	2.0	86.5	1.15	13.46	C, CN
2	1800	56H	**114327.00**	D	C6T17FB85C	37	575	2.5	81.0	1.15	12.31	S, US
2	1800	56H	**119589.00**	√	C6T17FB183A	39	575	2.2	86.5	1.15	13.48	S,US
2	1800	145T	**121942.00**	√	C145T17FB91A	45	575	2.2	86.5	1.25	14.43	S, US
2	1800	145T	**171654.00**	√	C145T17FB85A	61	575	2.5	86.5	1.15	12.48	C, CN
2	1200	184T	**132252.00**	√	C184T11FB26A	92	575	2.9	88.5	1.15	14.96	S,MX
2	1200	184T	**171627.00**	√	C184T11FB21A	101	575	2.4	88.5	1.15	16.80	C, CN
2	900	---	*	√	————	---	575	---	---	---	---	C, CA
3	3600	182T	**132093.00**	√	C182T34FB73A	66	575	3.0	86.5	1.25	13.96	S, MX
3	3600	182T	**171624.00**	√	C182T34FB7A	90	575	3.0	87.5	1.15	16.14	C, CN
3	1800	182T	**132253.00**	√	C182T17FB52A	80	575	3.1	89.5	1.15	16.14	S, MX
3	1800	182T	**171321.00**	√	C182T17FB43D	104	575	3.1	90.2	1.15	15.89	C, CN
3	1200	213T	**171380.00**	√	C213T11FB4A	171	575	3.8	89.5	1.15	18.19	C, CN
3	900	---	*	√	————	---	575	---	---	---	---	C, CA
5	3600	184T	**171625.00**	√	C184T34FB21A	98	575	4.7	88.5	1.15	16.80	C, CN
5	3600	184T	**132094.00**	√	C184T34FB22A	88	575	4.8	89.0	1.25	16.46	S, MX
5	1800	184T	**132255.00**	√	C184T17FB64A	94	575	5.1	89.5	1.15	14.96	S, MX
5	1800	184T	**171323.00**	√	C184T17FB44D	109	575	5.1	89.5	1.15	16.80	C, CN
5	1200	215T	**171381.00**	√	C215T11FB4A	168	575	6	89.5	1.15	19.61	C, CN
5	900	254T	**150750.22**	√	————	188	575	7.2	88.3	1.15	23.23	C, CA
7 1/2	3600	184T	**171768.00**	√	C184T34FB26A	115	575	7.0	91.0	---	16.80	C, CN
7 1/2	3600	213T	**170196.00**	√	C213T34FB43E	157	575	7.2	91.0	1.15	18.20	C, CN
7 1/2	1800	213T	**170207.00**	√	C213T17FB44D	165	575	7.4	91.7	1.15	18.19	C, CN
7 1/2	1200	254T	**170215.00**	√	C254T11FB4D	249	575	8.9	91.7	1.15	23.19	C, CN
7 1/2	900	256T	**150281.22**	√	————	290	575	9.7	87.7	1.15	24.96	C, CA
7 1/2	720	---	*	√	————	---	575	---	---	---	---	C, CA
10	3600	215T	**170197.00**	√	C215T34FB48D	181	575	9.2	91.7	1.15	19.61	C, CN
10	1800	215T	**170212.00**	√	C215T17FB44C	177	575	10.0	91.7	1.15	19.61	C, CN
10	1200	256T	**170219.00**	√	C256T11FB5D	276	575	11.6	91.7	1.15	24.92	C, CN
10	900	284T	*	√	————	---	575	---	---	---	---	C, CA
10	720	---	*	√	————	---	575	---	---	---	---	C, CA
15	3600	254T	**170198.00**	√	C254T34FB5D	276	575	13.8	92.4	1.15	23.19	C, CN
15	1800	254T	**170116.00**	√	C254T17GB11C	280	575	14.5	92.4	1.15	23.19	C, CN
15	1200	284T	**170222.00**	√	C284T11FB5D	386	575	16.2	92.4	1.15	26.30	C, CN
15	900	286T	**150262.22**	√	————	480	575	18.5	91.0	1.15	27.83	C, CA
15	720	---	*	√	————	---	575	---	---	---	---	C, CA
20	3600	256T	**170199.00**	√	C256T34FB11D	322	575	18.4	92.4	1.15	24.92	C, CN
20	1800	256T	**170117.00**	√	C256T17FB5D	322	575	19.5	93.6	1.15	24.92	C, CN
20	1200	286T	**170226.00**	√	C286T11FB7D	405	575	21.0	91.7	1.15	27.83	C, CN
20	900	324T	**150264.22**	√	————	640	575	25.6	91.0	1.15	29.53	C, CA
20	720	---	*	√	————	---	575	---	---	---	---	C, CA

Shaded frame indicates cast iron construction.

Green items are premium efficient.

* Motors will be assigned a catalogue/serial number at time of manufacture. Call for pricing.

Continued on next page.

♥ Note listing on inside back flap.
Specifications are subject to change without notice.

NEMA is a trademark of National Electrical Manufacturers Association and is not owned or controlled by Regal Beloit Corporation.

LEESON®

Three Phase - Totally Enclosed - Rigid Base - 575 Volts

HP	SYN RPM 60 Hz	NEMA® Frame	Catalogue Number	Availability	Model Number	App. Wgt. (lbs)	Voltage	F. L. Amps @ 575V	% F.L. Eff.	Service Factor	"C" Dim. (Inches)	♥Notes
25	3600	284TS	**170224.00**	√	C284T34FB6D	383	575	22.7	93.0	1.15	24.88	C, CN
25	1800	284T	**170118.00**	√	C284T17FB6C	385	575	23.6	93.6	1.15	26.26	C, CN
25	1200	324T	**170230.00**	√	C324T11FB4E	545	575	26.4	93.0	1.15	27.83	C, CN
25	900	326T	**150266.22**	√	————	700	575	30.4	91.2	1.15	31.02	C, CA
25	720	---	*	√	————	---	575	---	---	---	---	C, CA
30	3600	286TS	**170228.00**	√	C286T34FB5D	385	575	27.0	93.0	1.15	26.48	C, CN
30	1800	286T	**170119.00**	√	C286T17FB6C	432	575	28.0	93.6	1.15	27.83	C, CN
30	1200	326T	**170234.00**	√	C326T11FB4E	615	575	30.8	93.6	1.15	31.02	C, CN
30	900	364T	**150268.22**	√	————	810	575	36.0	91.3	1.15	32.64	C, CA
30	720	---	*	√	————	---	575	---	---	---	---	C, CA
40	3600	324TS	**170232.00**	√	C324T34FB4E	500	575	36.0	93.6	1.15	28.03	C, CN
40	1800	324T	**170120.00**	√	C324T17FB6D	538	575	38.0	94.1	1.15	29.53	C, CN
40	1200	364T	**170238.00**	√	C364T00FB5E	743	575	40.5	94.1	1.15	32.64	C, CN
40	900	365T	**150270.22**	√	————	960	575	48.0	91.9	1.15	33.62	C, CA
40	720	---	*	√	————	---	575	---	---	---	---	C, CA
50	3600	326TS	**170236.00**	√	C326T34FB5D	595	575	45.0	94.1	1.15	29.53	C, CN
50	1800	326T	**170121.00**	√	C326T17FB8D	587	575	47.0	94.5	1.15	31.02	C, CN
50	1200	365T	**170243.00**	√	C365T11FB6E	790	575	50.5	94.1	1.15	33.62	C, CN
50	900	---	*	√	————	---	575	---	---	---	---	C CA
50	720	---	*	√	————	---	575	---	---	---	---	C, CA
60	3600	364TS	**170241.00**	√	C364T34FB5F	760	575	54.0	94.1	1.15	30.51	C, CN
60	1800	364T	**170239.00**	√	C364T17FB7F	666	575	57.0	95.4	1.15	32.64	C, CN
60	1200	404T	**170248.00**	√	C404T11FB4E	1040	575	56.0	94.5	1.15	36.42	C, CN
60	900	---	*	√	————	---	575	---	---	---	---	C, CA
60	720	---	*	√	————	---	575	---	---	---	---	C, CA

Shaded frame indicates cast iron construction.

Green items are premium efficient.

* Motors will be assigned a catalogue/serial number at time of manufacture. Call for pricing.

♥ Note listing on inside back flap.
Specifications are subject to change without notice.

NEMA is a trademark of National Electrical Manufacturers Association and is not owned or controlled by Regal Beloit Corporation.

Three Phase Motors
Totally Enclosed Fan Cooled
General Purpose - Standard and Premium Efficiency - Three Phase Motors

Three Phase - TEFC - Rigid - 575 Volts

HP	SYN RPM 60 Hz	NEMA® Frame	Catalogue Number	Availability	Model Number	App. Wgt. (lbs)	Voltage	F. L. Amps @ 575V	% F.L. Eff.	Service Factor	"C" Dim. (Inches)	♥Notes
75	3600	365TS	**170246.00**	√	C365T34FB5F	884	575	67.0	94.5	1.15	31.49	C, CN
75	1800	365T	**170244.00**	√	C365T17FB5E	733	575	68.5	95.8	1.15	33.62	C, CN
75	1200	405T	**170251.00**	√	C405T11FB6E	1125	575	70.5	94.5	1.15	37.91	C, CN
75	900	---	*	√	————	---	575	---	---	---	---	C, CA
75	720	---	*	√	————	---	575	---	---	---	---	C, CA
100	3600	405TS	**170254.00**	√	C405T34FB6D	955	575	87.2	95.0	1.15	34.92	C, CN
100	1800	405T	**170253.00**	√	C405T17FB5E	1095	575	90.0	95.4	1.15	37.91	C, CN
100	1200	444T	**171668.00**	√	C444T11FB7A	1420	575	97.5	95.0	1.15	42.87	C, CN
100	900	---	*	√	————	---	575	---	---	---	---	C, CA
125	3600	444TS	**170621.00**	√	444T34FB9A	1295	575	108.5	95.0	1.15	39.10	C, CN
125	1800	444T	**170257.00**	√	C444T17FB11A	1950	575	110.0	95.4	1.15	42.87	C, CN
125	1200	445T	**171669.00**	√	C445T11FB6A	1585	575	124.0	95.0	1.15	44.88	C, CN
150	3600	445TS	**170267.00**	√	C445T34FB4A	1440	575	130.0	95.4	1.15	44.88	C, CN
150	1800	445T	**170545.00**	√	C445T17FB11A	1627	575	130.0	95.8	1.15	44.88	C, CN
150	1200	447T	**171628.00**	√	C447T11FB4A	2230	575	148.5	95.8	1.15	48.00	C, CN
200	3600	447TS	**170607.00**	√	C447T34FB4A	2014	575	173.5	95.4	1.15	48.00	C, CN
200	1800	447T	**170603.00**	√	C447T17FB5A	2227	575	173.5	96.2	1.15	48.00	C, CN
200	1200	449T	**171665.00**	√	C449T11FB4A	2542	575	193.0	95.8	1.15	52.80	C, CN
250	1800	449T	**170625.00**	√	C449T17FB8A	2850	575	216.0	96.2	1.15	52.90	C, CN 84
300	1800	449T	**171532.00**	C/A	449T17FB14	---	575	---	---	---	---	C, CN 84
350	1800	449T	**171531.00**	C/A	449T17FB15	---	575	---	---	---	---	C, CN 84

Shaded frame indicates cast iron construction.

Green items are premium efficient.

* Motors will be assigned a catalogue/serial number at time of manufacture. Call for pricing.

Note 84: Does not meet Class 1 Division 2 certification.

♥ Note listing on inside back flap.
Specifications are subject to change without notice.

NEMA is a trademark of National Electrical Manufacturers Association and is not owned or controlled by Regal Beloit Corporation.

Three Phase Motors
Totally Enclosed Fan Cooled
General Purpose - Standard and Premium Efficiency - Three Phase Motors

Three Phase - Totally Enclosed - C-Face Motors (with or without base) - 575 Volts

HP	SYN RPM 60 Hz	NEMA® Frame	Catalogue Number	Availability	Model Number	App. Wgt. (lbs)	Voltage	F. L. Amps @ 575V	% F.L. Eff.	Service Factor	"C" Dim. (Inches)	♥Notes
1/4	1800	S56C	**101922.00**	√	C4T17FC17B	16	575	0.56	58	1.15	9.81	S, MX
1/3	1800	S56C	**101248.00**	√	C4T17FC3D	19	575	0.6	64.3	1.15	9.69	S, MX
1/3	1800	56C	**110711.00**	√	C6T17NC45G	22	575	.52	72	1.15	9.94	S, US, 12
1/3	1800	56C	**A009711.00**	√	C6T17FC173A	22	575	0.6	69	1.15	11.32	S, MX
1/2	1800	56C	**A009176.00**	√	C6T17FC242A	41	575	0.6	80.0	1.15	12.32	S, MX
1/2	1800	S56C	**101908.00**	√	C4T17FC16B	22	575	0.8	68.0	1.15	9.94	S, MX
1/2	1800	56C	**110176.00**	√	C6T17NC10G	20	575	.72	78.5	1.15	9.94	S, U.S, 12
3/4	1800	56C	**110177.00**	√	C6T17FC7G	21	575	1.2	77.0	1.15	10.81	S, US
3/4	1800	56C	**114472.00**	√	C6T17FK54D	27	575	1.1	77.0	1.15	10.98	S, US, 81
3/4	1800	56C	**A009177.00**	√	C6T17FC238A	21	575	1.2	80	1.15	11.82	S, MX
1	3600	56C	**114469.00**	√	C6T34FC45C	24	575	1.3	77.1	1.15	10.81	S, US
1	3600	56C	**114468.00**	√	C6T34FK51C	22	575	1.3	77.1	1.15	10.81	S, US, 81
1	1800	56C	**110204.00**	D	C6T17FC8G	26	575	1.5	77.0	1.15	11.31	S, US
1	1800	56C	**119542.00**	√	C6T17FC251A	34	575	1.3	85.5	1.15	12.48	S, US
1	1800	56C	**114467.00**	D	C6T17FK53D	31	575	2.0	80.0	1.15	11.31	S, US,81
1	1800	56C	**119611.00**	√	C6T17FK108A	30	575	1.3	85.5	1.15	12.23	S, US
1	1800	56C	**A009204.00**	D	C6T17FC240A	27	575	1.1	79	1.15	12.32	S, MX, 81
1	1800	145TC	**122227.00**	√	C143T17FC46A	38	575	1.3	85.5	1.15	12.67	S, US
1 1/2	1800	56C	**111444.00**	D	C6T17FC39J	36	575	2.0	78.5	1.15	11.81	S, US
1 1/2	1800	56C	**119543.00**	√	C6T17FC252A	37	575	1.9	86.5	1.15	12.98	S, US
1 1/2	1800	145TC	**122228.00**	√	C145T17FC134A	38	575	1.9	86.5	1.15	13.75	S, US
1 1/2	1800	145TC	**171755.00**	√	C145T17FK67A	61	575	1.8	86.5	1.15	13.98	C, CN, 81
2	3600	56C	**111611.00**	D	C6T34FC26G	37	575	2.2	82.5	1.15	12.31	S, US
2	3600	56C	**119544.00**	√	C6T34FC133A	42	575	1.9	85.5	1.15	12.98	S, US
2	3600	56C	**117048.00**	D	C6T34FK114A	38	575	2.2	82.5	1.15	12.31	S, US, 81
2	3600	56HC	**119601.00**	√	C6T34FK152A	44	575	1.9	85.5	1.15	12.98	S, US, 81
2	1800	145TC	**122229.00**	√	C145T17FC129A	43	575	2.3	86.5	1.15	13.92	S, US
2	1800	145TC	**171756.00**	√	C145T17FK68A	61	575	2.5	86.5	1.15	13.98	C, CN, 81

Shaded frame indicates cast iron construction.

♥ Note listing on inside back flap.
Specifications are subject to change without notice.

Green items are premium efficient.

D - Item to be discontinued once inventory is depleted.

▶ Model number is from stock item with a c-face installed.

* Motors will be assigned a catalogue/serial number at time of manufacture. Call for pricing.

Note 81: "C" face mount with rigid base.
Note 12: TENV

NEMA is a trademark of National Electrical Manufacturers Association and is not owned or controlled by Regal Beloit Corporation.

Three Phase Motors
Totally Enclosed Fan Cooled
General Purpose - Standard
and Premium Efficient - Three Phase Motors

Three Phase - Totally Enclosed - C Face Motors (with or without base) - 575 Volts

HP	SYN RPM 60 Hz	NEMA® Frame	Catalogue Number	Availability	Model Number	App. Wgt. (lbs)	Voltage	F. L. Amps @ 575 V	% F.L. Eff.	Service Factor	"C" Dim. (Inches)	♥Notes
3	3600	56HC	**115597.00**	D	C6T34FK78C	43	575	3.2	80.0	1.0	12.81	S, US, 81
3	3600	56HC	**119605.00**	√	C6T34FK143A	43	575	3.2	86.5	1.0	13.49	S, US
3	1800	56HC	**116400.00**	√	C6T17FK92C	50	575	3.4	82.5	1.0	13.48	S, US, 81, 82
3	1800	182TC	**132461.00**	√	C182T17FC43A	75	575	3.1	89.5	1.15	13.97	S, MX
3	1800	182TC	**171757.00**	√	C182T17FK29A	104	575	3.1	90.2	1.15	16.89	C, CN, 81
5	3600	56HC	**117026.00**	√	C6T34FK113B	48	575	5.2	87.5	1.0	13.74	S, US, 81, 82
5	1800	184TC	**132462.00**	√	C184T17FC52A	99	575	5.1	89.5	1.15	15.47	S, MX
5	1800	184TC	**171327.00**	√	C184T17FK45B	128	575	5.1	89.5	1.15	16.80	C, CN, 81
7 1/2	1800	213TC	**171759.00**	√	C213T17FK25A	165	575	7.44	91.7	1.15	18.19	C, CN, 81
10	1800	215TC	**171760.00**	√	C215T17FK21A	190	575	10	91.7	1.15	19.61	C, CN, 81
15	1800	254TC	**171761.00**	√	C254T17FK13A	280	575	14.5	92.4	1.15	23.19	C, CN, 81
20	1800	256TC	**171762.00**	√	C256T17FK13A	322	575	19.5	93.6	1.15	24.92	C, CN, 81
25	1800	284TC	**171763.00**	√	C284T17FK10A	385	575	23.6	93.6	1.15	26.26	C, CN, 81
30	1800	286TC	**171764.00**	√	C286T17FK9A	432	575	28.0	93.6	1.15	27.83	C, CN, 81
40	1800	324TC	**171765.00**	√	C324T17FK10A	538	575	38.0	94.1	1.15	29.53	C, CN, 81
50	1800	326TC	**171766.00**	√	C326T17FK8A	587	575	47.0	94.5	1.15	31.02	C, CN, 81
60	1800	364TC	**170239CB**	√	C364T17FB7F▶	666	575	57.0	95.4	1.15	32.64	C, CN, 81

Shaded frame indicates cast iron construction.

♥ Note listing on inside back flap.
Specifications are subject to change without notice.

Green items are premium efficient.

▶ Model number is from stock item with a c-face installed.

D - Items to be discontinued once inventory is depleted.

Note 81: "C" flange mount with rigid base.
Note 82: 60 Minute duty.

NEMA is a trademark of National Electrical Manufacturers Association and is not owned or controlled by Regal Beloit Corporation.

LEESON®

HAVE YOU TOURED THE NEW REGAL WEBSITE?

REGALBELOIT.COM

FEATURES:

- In depth information about Regal® brands and products
- Competitive cross-reference tool
- Robust product information details
- Rotating 360° views of products
- View products based on solution and application within a specific industry
- Access to dimensional drawings, CAD files, connection diagrams and more

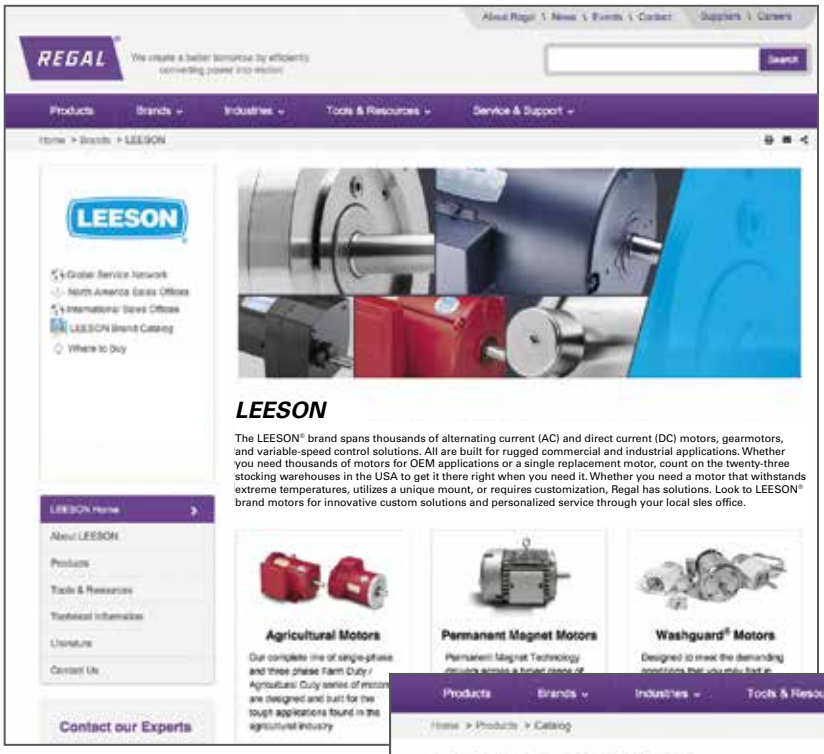

CUSTOMER SEARCH:

Search for products by part number, by product family, by industry, by application, by brand, by solution, by cross reference, by configurator, with engineering tools and more. It is a 360° model designed to guide you to the right item.

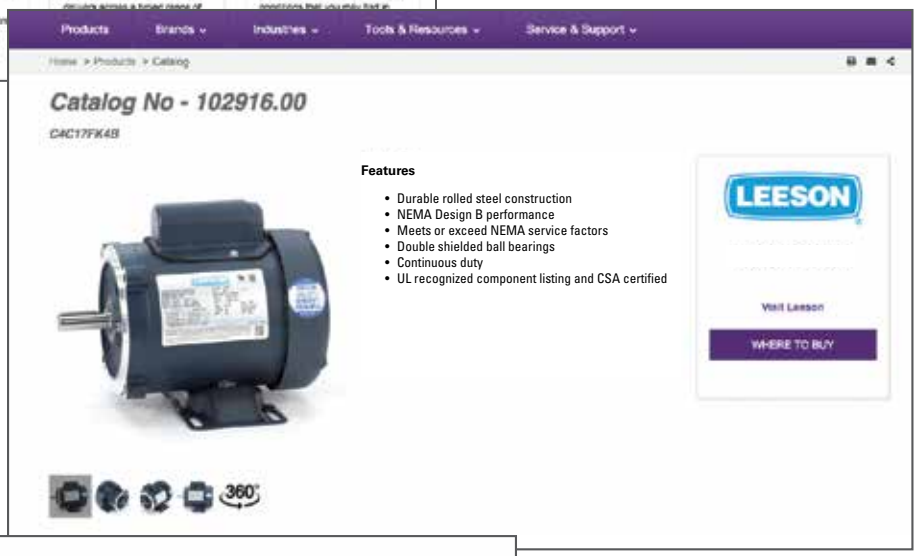

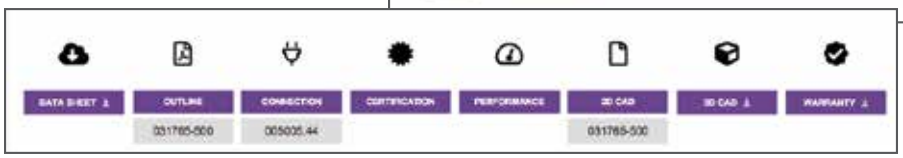

INFORMATIONAL TOOL:

The website is packed with information, data, industry facts and statistics.

Regalbeloit.com

NEMA is a trademark of National Electrical Manufacturers Association and is not owned or controlled by Regal Beloit Corporation.

Inverter Duty Motors

Permanent Magnet AC Motors

TENV and TEFC Three Phase C face with base

NEW!

Commercial, Rolled Steel Frame (NEMA® 56 frame models)

Features:

- Meets or exceeds NEMA Premium® (IE3)
- Class F IRIS® insulation system
- 20:1 constant torque open-loop (1000:1 closed-loop)
- IP43 enclosure (IP54 and IP55 available)
- Totally enclosed non-ventilated
- Sealed ball bearing
- High power density, low weight design
- Provisions for optional shaft grounding ring
- Requires a PMAC inverter for operation

CONTROL ENGINEERING

2017 ENGINEERS' CHOICE AWARDS

WINNER

Industrial, Cast Iron Frame (NEMA 182-286T frame models)

Features:

- Ultra Efficient™ Premium-Plus exceeds NEMA Premium (IE4)
- Class H IRIS™ insulation system
- Cast iron construction for rigidity and reduced vibration
- Severe duty, TEFC
- Normally closed thermostats (One per phase, Class F)
- High power density, low weight design
- UL, CSA and CE
- Optional terminal block
- Provisions for shaft grounding ring
- Requires a PMAC inverter for operation

TENV and TEFC Three Phase C Face With Base

HP	SYN RPM 60 Hz	NEMA® Frame	Catalogue Number	Availability	Model Number	App. Wgt. (lbs)	Voltage	Hertz	F. L. Amps	Nominal EFF	Torque (LB-FT)	"C" Dim. (Inches)	♥Notes
1/4	1800	S56C	**103756.00**	C/A	56PNRA20202A	13	208-230/460	90	.8/.4	82.5	0.729	7.82	S, MX, 12
1/3	1800	S56C	**103757.00**	C/A	56PNRA20203A	13	208-230/460	90	1.2/.6	84.0	0.963	7.82	S, MX, 12
1/2	1800	S56C	**103758.00**	C/A	56PNRA20204A	13	208-230/460	90	1.5/.75	84.0	1.5	7.82	S, MX, 12
3/4	1800	S56C	**103759.00**	C/A	56PNRA20205A	16	208-230/460	90	1.9/.94	88.5	2.2	8.82	S, MX, 12
1	1800	S56C	**103760.00**	C/A	56PNRA20206A	18	208-230/460	90	3.44/1.71	88.5	2.9	8.82	S, MX, 12
1 1/2	1800	S56C	**104008.00**	C/A	56PNRA20207A	23	208-230/460	90	5.4/2.7	89.5	4.4	9.68	S, MX, 12
2	1800	S56C	**103761.00**	C/A	56PNRA20208A	28	208-230/460	90	6.32/3.16	90.2	5.8	10.68	S, MX, 12
3	1800	182TC	**132293.00**	C/A	182TPFSA20017	133	230/460	150	6.4	91.7	8.8	16.63	C, US
5	1800	184TC	**132294.00**	C/A	184TPFSA20018	108	460	150	6.4	91.7	14.6	16.63	C, MX
7 1/2	1800	213TC	**140840.00**	C/A	213TPFSA20027	142	460	150	9.4	93.0	21.9	20.16	C, MX
10	1800	215TC	**140841.00**	C/A	215TPFSA20028	192	460	150	12.3	93.6	29.2	20.16	C, MX
15	1800	254TC	**825201.00**	C/A	254TPFSA20057	344	460	120	18.0	94.5	43.8	25.77	C, MX
20	1800	256TC	**825202.00**	C/A	256TPFSA20058	380	460	120	24.0	95.0	58.3	25.77	C, MX
25	1800	284TC	**825203.00**	C/A	284TPFSA20059	414	460	120	30.0	95.0	72.9	26.21	C, MX
30	1800	286TC	**825204.00**	C/A	286TPFSA20060	454	460	120	35.5	95.4	87.5	27.71	C, MX
40	1800	286TC	**825387.00**	C/A	286TPFSA20125	474	460	120	47.5	95.8	116.7	27.71	C, MX

Shaded frame indicates cast iron construction.

C/A - Check Availability.

♥ Note listing on inside back flap.
Specifications are subject to change without notice.

NEMA and NEMA Premium are trademarks of National Electrical Manufacturers Association and are not owned or controlled by Regal Beloit Corporation.

NEW!

LEESON® VSD Series Inverters At A Glance

For use with PMAC or AC induction motors

For more information, please see pages 253-256 of this catalogue.

	VSD	VSD - Plus
Power Range	1/3 - 3 HP	1/3 - 30 HP
Voltages	230/240 Volts 1 or 3 phase / 400/480 Volts	230/240 Volts 1 or 3 phase / 400/480 Volts
Hardware	• Memory module	**In addition to VSD**
	• IT-Grid compatible	• Brake chopper
	• Integrated EMC filters	• DC bus sharing
	• Zero clearance mounting	• Safety torque off (optional)
	• Form "C" relay	• Dedicated PTC
I/O	**Basic -I/O**	**Standard-I/O**
Communication	• Spring loaded control terminals (fixed)	• Pluggable control terminal
		• Bipolar speed reference
		• 24V keep alive
		• Selectable PHP or NPN logic
		• Application-I/O (optional)
		• Additional I/Os
Fieldbus	CANopen/Modbus (optional)	CANopen, Modbus, Profibus,
		Profinet, EtherNet-I/P
Diagnostics	Hot-swappable options: keypad, USB module, WLAN module, remote keypad	

Explosion Proof Motors

For a Full Selection of LEESON® Explosion-Proof Motors please view the LEESON L1050E Catalogue at www.regalbeloit.com/Brands/LEESON

- Meets all UL and CSA safety requirements
- Single and three phase motors
- Double shielded ball bearings
- Automatic overload protection or thermostat protected
- Includes explosion proof conduit box
- NEMA® 1.0 or 1.15 service factor
- ATEX Ex Zone 2 & 22 ratings available

Applications:
These motors must be applied in accordance with the National Electrical Code, Article #500. Consult NFPA Publication 497M for a complete listing of explosive agents that are typically found in the environments that these motors are exposed to.

NEMA is a trademark of National Electrical Manufacturers Association and is not owned or controlled by Regal Beloit Corporation.

Application Notes:
These motors must be applied in accordance with the National Electrical Code, Article #500. A partial listing of explosive agents is noted below. Consult NFPA Publication 497M for a complete listing. Please note subheads above each column for qualifications of LEESON® motors.

Features:
- Meets UL and CSA safety requirements
- Automatic overload or thermostat protected
- Explosion rated conduit box included
- Internal mounted capacitors
- Double shielded ball bearings
- Meets temperature code T3B

Rating Information:
According to UL, Division I areas are environments where a hazard is present continuously or would be subject to fire or explosion if the hazard was present as a result of an accident or uncommon occurrence.

Division II areas are environments where the threat of fire or explosion is not normally present and not likely to result in the event of an abnormal occurrence.

Application Notes:
Class I
Group A: Acetylene
Group B: Butadiene, ethylene oxide, hydrogen, propylene oxide, manufactured gases containing more than 30% hydrogen by volume.
Group C: Acetaldehyde, cyclopropane, diethyl ether, ethylene.
Group D: Acetone, acrylonitrile, ammonia, benzene, butane, ethanol, ethylene dichloride, gasoline, hexane, isoprene, methane (natural gas), methanol, naphtha, propane, propylene, styrene, toluene, vinyl acetate, vinyl chloride, xylene.
Class II
Group E: Aluminum, magnesium and other metal dusts with similar characteristics.
Group F: Carbon black, coke or coal dust.
Group G: Flour, starch or grain dust.

Note: No LEESON motors are listed for Class I, Group A or B for Division I.

Please contact your local LEESON motors sales office for ATEX certified motors, zone 2 and 22.

Explosion-Proof Motors

Single Phase - Rigid Base

Division I, Class I, Groups C&D - Class II, Groups F&G - W/Conduit Box

HP	SYN RPM 60 Hz	NEMA® Frame	Catalogue Number	Availability	Model Number	App. Wgt. (lbs)	Voltage	Over-load Prot.	F. L. Amps @ 230 V	Service Factor	"C" Dim. (Inches)	♥Notes
1/3	1800	56	**111074.00**	√	A6C17EB20	38	115/230	Auto.	2.9	1.00	12.97	S, US, 12
1/2	1800	56H	**111084.00**	√	A6C17XB22	32	115/230	Auto.	4.4	1.00	13.58	S, US, 6, 13
3/4	1800	56H	**110934.00**	√	A6C17XB21	49	115/230	Auto.	5.5	1.00	14.08	S, US, 6, 13
1	1800	56H	**110961.00**	√	A6C17XB20	37	115/230	Auto.	6.7	1.00	14.08	S, US, 6, 13

Note 12: TENV
Note 13: TEFC

♥ Note listing on inside back flap.
Specifications are subject to change without notice.

Single Phase - C Face Less Base

Division I, Class I, Groups C&D - Class II, Groups F&G - W/Conduit Box

HP	SYN RPM 60 Hz	NEMA Frame	Catalogue Number	Availability	Model Number	App. Wgt. (lbs)	Voltage	Over-load Prot.	F. L. Amps @ 230 V	Service Factor	"C" Dim. (Inches)	♥Notes
1/3	3600	56C	**111095.00**	√	A6C34EC20	28	115/230	Auto.	3.5	1.00	13.44	S, US, 13
1/3	1800	56C	**111075.00**	√	A6C17EC20	44	115/230	Auto.	2.9	1.00	12.97	S, US, 12
1/2	3600	56C	**111098.00**	√	A6C34XC22	27	115/230	Auto.	4.2	1.00	13.44	S, US, 13
1/2	3600	56J	**116188.00**	√	A6C34XC31	38	115/230	Auto.	4.2	1.00	13.96	S, US, 13
1/2	1800	56C	**111085.00**	√	A6C17XC22	30	115/230	Auto.	4.4	1.00	13.94	S, US, 13
3/4	3600	56C	**111097.00**	√	A6C34XC21	35	115/230	Auto.	5.3	1.00	13.96	S, US, 13
3/4	3600	56J	**116186.00**	√	A6C34XC32	43	115/230	Auto.	5.3	1.00	14.46	S, US, 13
3/4	1800	56C	**111086.00**	√	A6C17XC21	34	115/230	Auto.	5.5	1.00	14.44	S, US, 13
1	3600	56C	**111096.00**	√	A6C34XC20	35	115/230	Auto.	6.2	1.00	14.44	S, US, 13
1	3600	56J	**116185.00**	√	A6C34XC33	36	115/230	Auto.	6.2	1.00	14.96	S, US, 13
1	1800	56C	**110852.00**	√	A6C17XC20	36	115/230	Auto.	6.7	1.00	14.44	S, US, 13
1 1/2	3600	56C	**114424.00**	√	A6C34XC26	37	115/230	Auto.	7.7	1.00	14.96	S, US, 13
1 1/2	3600	56J	**116183.00**	√	A6C34XC34	40	115/230	Auto.	7.7	1.00	14.95	S, US, 13
2	3600	56C	**114425.00**	√	A6C34XC27	42	115/230	Auto.	10.0	1.00	14.94	S, US, 13
2	3600	56J	**116181.00**	√	A6C34XC35	43	115/230	Auto.	10.0	1.00	15.45	S, US, 13

Note 12: TENV
Note 13: TEFC

♥ Note listing on inside back flap.
Specifications are subject to change without notice.

Single Phase - C Face With Base

Division I, Class I, Groups C&D - Class II, Groups F&G - W/Conduit Box

HP	SYN RPM 60 Hz	NEMA Frame	Catalogue Number	Availability	Model Number	App. Wgt. (lbs)	Voltage	Over-load Prot.	F. L. Amps @ 230 V	Service Factor	"C" Dim. (Inches)	♥Notes
1/3	3600	56C	**116605.00**	√	A6C34XK7	28	115/230	Auto.	3.5	1.00	13.44	S, US, 13
1/3	1800	56C	**116606.00**	√	A6C17XK33	28	115/230	Auto.	3.3	1.00	13.44	S, US, 13
1/3	1200	56C	**116607.00**	√	A6C17XK31	33	115/230	Auto.	3.9	1.00	13.94	S, US, 13
1/2	3600	56C	**116608.00**	√	A6C34XK6	28	115/230	Auto.	4.2	1.00	13.44	S, US, 13
1/2	1800	56C	**116609.00**	√	A6C17XK32	38	115/230	Auto.	4.4	1.00	13.94	S, US, 13
1/2	1200	56C	**116610.00**	√	A6C17XK34	56	115/230	Auto.	4.8	1.00	14.94	S, US, 13
3/4	3600	56C	**116611.00**	√	A6C34XK5	32	115/230	Auto.	5.3	1.00	13.94	S, US, 13
3/4	1800	56C	**116612.00**	√	A6C17XK30	51	115/230	Auto.	5.5	1.00	14.44	S, US, 13
1	3600	56C	**116613.00**	√	A6C34XK4	36	115/230	Auto.	6.3	1.00	14.44	S, US, 13
1	1800	56C	**116614.00**	√	A6C17XK29	40	115/230	Auto.	6.7	1.00	14.44	S, US, 13
1 1/2	3600	56C	**116615.00**	√	A6C34XK3	45	115/230	Auto.	7.7	1.00	14.44	S, US, 13
2	3600	56C	**116616.00**	√	A6C34XK2	46	115/230	Auto.	10.0	1.00	14.94	S, US, 13

Note 13: TEFC

♥ Note listing on inside back flap.
Specifications are subject to change without notice.

NEMA is a trademark of National Electrical Manufacturers Association and is not owned or controlled by Regal Beloit Corporation.

Three Phase - Rigid Base - 230/460 Volts

Division I, Division II, Class I, Groups C&D - Class II, Groups F&G - W/Conduit Box

HP	SYN RPM 60 Hz	NEMA® Frame	Catalogue Number	Availability	Model Number	App. Wgt. (lbs)	Voltage	Over-load Prot.	F. L. Amps @ 230 V	% F.L. Eff.	Service Factor	"C" Dim. (Inches)	♥Notes
1/3	1800	56	**111932.00**	√	A6T17EB22	26	230/460	Auto	1.3	74.5	1.00	11.97	S, US, 12
1/3	1800	56	**117856.00**	√	C6T17EB38	30	230/460	T-Stats	1.3	74.5	1.00	11.97	S, US, 12
1/3	1200	56	**111940.00**	√	A6T11EB21	42	230/460	Auto	1.5	76.5	1.00	13.97	S, US, 12
1/2	3600	56	**111934.00**	C/A	A6T34EB22	42	230/460	Auto	1.6	80.0	1.00	12.47	S, US, 12
1/2	1800	56	**111929.00**	√	A6T17EB21	31	230/460	Auto	1.7	80.0	1.00	12.47	S, US, 12
1/2	1800	56	**117857.00**	√	C6T17EB39	35	230/460	T-Stats	1.7	80.0	1.00	12.47	S, US, 12
1/2	1200	56	**111938.00**	√	A6T11XB22	47	230/460	Auto	2.0	77.0	1.00	13.47	S, US, 12
3/4	3600	56	**111937.00**	√	A6T34XB21	29	230/460	Auto	3.2	74.0	1.00	13.44	S, US, 13
3/4	1800	56	**111923.00**	√	A6T17XB21	31	230/460	Auto	3.0	75.5	1.00	13.94	S, US, 13
3/4	1800	56	**117858.00**	√	C6T17XB35	31	230/460	T-Stats	3.0	75.5	1.00	13.94	S, US, 13
3/4	1200	56	**119736.00**	√	A6T11XB49	57	230/460	Auto	3.6	74.0	1.00	13.44	S, US, 13
1	3600	56	**119425.00**	√	A6T34XB23	34	230/460	Auto	3.0	80.0	1.00	13.94	S, US, 13
1	1800	56H	**119421.00**	√	A6T17XB32	49	230/460	Auto	3.3	85.5	1.00	15.58	S, US, 6, 13
1	1800	56H	**119426.00**	√	C6T17XB33	48	230/460	T-Stats	3.3	85.5	1.00	15.58	S, US, 6, 13
1	1200	56H	**119737.00**	√	A6T11XB50	52	230/460	Auto	3.8	80.0	1.00	15.94	S, US, 13
1 1/2	3600	143T	**121914.00**	√	A143T34XB25	44	230/460	Auto	4.0	84.0	1.00	14.41	S, US, 13
1 1/2	1800	56H	**119433.00**	√	C6T17XB34	51	230/460	T-Stats	4.6	86.5	1.15	15.58	S, US, 13
1 1/2	1800	145T	**121915.00**	√	A145T17XB28	59	230/460	Auto	4.6	86.5	1.00	16.00	S, US, 13
1 1/2	1800	145T	**122024.00**	√	C145T17XB31	59	230/460	T-Stats	4.6	86.5	1.00	16.00	S, US, 13
2	3600	145T	**121916.00**	√	A145T34XB25	55	230/460	Auto	5.0	85.5	1.00	15.41	S, US, 13
2	1800	145T	**121917.00**	√	C145T17XB27	60	230/460	Auto	5.0	86.5	1.00	15.41	S, US, 13
2	1800	145T	**122025.00**	√	C145T17XB32	60	230/460	T-Stats	6.0	86.5	1.00	16.00	S, US, 13
3	3600	145T	**121918.00**	√	C145T34XB26B	56	230/460	T-Stats	7.6	87.0	1.00	16.00	S, US, 13

Green items are premium efficient.

Explosion proof motors having T-Stats are inverter rated.
C/A - Check Availability.
Note 12: TENV
Note 13: TEFC

Note: 230/460 Volt motors are suitable for use at 208 Volts 60HZ at 1.0 Service factor.

♥ Note listing on inside back flap.
Specifications are subject to change without notice.

Three Phase - Rigid Base - 575 Volts

Division I, Division II, Class I, Groups C&D - Class II, Groups F&G - W/Conduit Box

HP	SYN RPM 60 Hz	NEMA Frame	Catalogue Number	Availability	Model Number	App. Wgt. (lbs)	Voltage	Over-load Prot.	F. L. Amps @ 575 V	% F.L. Eff.	Service Factor	"C" Dim. (Inches)	♥Notes
1	3600	56	**117574.00**	√	A6T34XB22A	34	575	Auto.	1.2	80.0	1.00	13.94	S, US, 13
1 1/2	3600	143T	**121961.00**	√	A143T34XB26A	45	575	Auto.	1.6	84.0	1.00	16.00	S, US, 13
1 1/2	1800	145T	**121953.00**	√	A145T17XB29AA	57	575	Auto.	1.9	86.5	1.00	16.00	S, US, 13
2	3600	145T	**121962.00**	C/A	————	55	575	Auto.	1.9	85.5	1.00	16.00	S, US, 13
2	1800	145T	**121954.00**	√	A145T17XB30AA	60	575	Auto.	2.3	86.5	1.00	16.50	S, US, 13
3	3600	145T	**121963.00**	C/A	————	56	575	Auto.	1.9	86.5	1.00	16.50	S, US, 13

Green items are premium efficient.

Explosion proof motors having T-Stats are inverter rated.
C/A - Check Availability.
Note 13: TEFC

♥ Note listing on inside back flap.
Specifications are subject to change without notice.

NEMA is a trademark of National Electrical Manufacturers Association and is not owned or controlled by Regal Beloit Corporation.

Explosion-Proof Motors

Three Phase - C Face Less Base

Three Phase - C Face Less Base - 230/460 Volts

Division I, Division II, Class I, Groups C&D - Class II, Groups F&G - W/Conduit Box

HP	SYN RPM 60 Hz	NEMA® Frame	Catalogue Number	Availability	Model Number	App. Wgt. (lbs)	Voltage	Over-load Prot.	F. L. Amps @ 230 V	% F.L. Eff.	Service Factor	"C" Dim. (Inches)	♥Notes
1/3	3600	56C	**111944.00**	√	A6T34EC23	26	230/460	Auto	1.1	78.5	1.00	11.97	S, US, 12
1/3	1800	56C	**111931.00**	√	A6T17EC23	25	230/460	Auto	1.2	74.5	1.00	11.97	S, US, 12
1/3	1800	56C	**117860.00**	√	C6T17EC30	30	230/460	T-Stat	1.2	74.5	1.00	11.97	S, US, 12
1/2	3600	56C	**111933.00**	√	A6T34EC22	31	230/460	Auto	1.6	80.0	1.00	12.47	S, US, 12
1/2	3600	56J	**116187.00**	√	A6T34EC28	32	230/460	Auto	1.6	80.0	1.00	12.98	S, US, 12
1/2	1800	56C	**111930.00**	√	A6T17EC22	29	230/460	Auto	1.7	80.0	1.00	12.47	S, US, 12
1/2	1800	56C	**117852.00**	√	A6T17XC29	30	230/460	T-Stat	1.7	80.0	1.00	12.47	S, US, 12
3/4	3600	56C	**111936.00**	√	A6T34XC21	30	230/460	Auto	3.2	74.0	1.00	13.44	S, US, 13
3/4	1800	56C	**111935.00**	√	A6T17XC23	30	230/460	Auto	3.0	75.5	1.00	13.94	S, US, 13
3/4	1800	56C	**117853.00**	√	C6T17XC30	36	230/460	T-Stat	3.0	75.5	1.00	13.94	S, US, 13
1	3600	56C	**119422.00**	√	A6T34XC47A	36	230/460	Auto	3.0	75.5	1.00	13.94	S, US, 13
1	3600	56J	**119424.00**	√	A6T34XC49	40	230/460	Auto	3.0	80.0	1.00	14.45	S, US, 13
1	1800	56C	**119420.00**	√	A6T17XC52	45	230/460	Auto	3.3	85.5	1.00	15.94	S, US, 13
1	1800	56C	**119423.00**	√	C6T17XC51	53	230/460	T-Stat	3.3	85.5	1.00	15.94	S, US, 13
1 1/2	3600	56C	**119428.00**	√	A6T34XC48	44	230/460	Auto	4.2	84.0	1.00	14.94	S, US, 13
1 1/2	3600	56J	**119429.00**	√	A6T34XC50	43	230/460	Auto	4.2	84.0	1.00	15.45	S, US, 13
1 1/2	1800	56C	**119427.00**	√	A6T17XC49	51	230/460	Auto	4.6	86.5	1.00	15.94	S, US, 13
1 1/2	1800	56C	**119430.00**	√	C6T17XC50	51	230/460	T-Stat	4.8	86.5	1.00	15.94	S, US, 13
2	3600	56C	**119431.00**	√	A6T34XC51	55	230/460	Auto	5.0	85.5	1.15	16.44	S, US, 13
2	3600	56J	**119434.00**	√	A6T34XC52	50	230/460	Auto	5.0	85.5	1.00	14.45	S, US, 13
2	1800	145TC	**122174.00**	√	A145T17XC9	60	230/460	Auto	6.0	86.5	1.00	16.50	S, US, 13
2	1800	145TC	**122175.00**	√	C145T17XC10	60	230/460	T-Stat	6.0	86.5	1.00	16.50	S, US, 13
3	3600	56C	**119435.00**	√	A6T34XC53	59	230/460	Auto	8.2	87.5	1.00	15.94	S, US, 13

Green items are premium efficient.

Explosion proof motors having T-Stats are inverter rated.
Note 12: TENV
Note 13: TEFC

Note: 230/460 Volt motors are suitable for use at 208 Volts 60HZ at 1.0 Service factor.

♥ Note listing on inside back flap.
Specifications are subject to change without notice.

NEMA is a trademark of National Electrical Manufacturers Association and is not owned or controlled by Regal Beloit Corporation.

LEESON®

Three Phase - C Face With Base - 230/460

Division I, Division II, Class I, Groups C&D - Class II, Groups F&G - W/Conduit Box

HP	SYN RPM 60 Hz	NEMA® Frame	Catalogue Number	Availability	Model Number	App. Wgt. (lbs)	Voltage	Over-load Prot.	F. L. Amps @ 230 V	% F.L. Eff.	Service Factor	"C" Dim. (Inches)	♥Notes
1/3	3600	56C	**114625.00**	√	A6T34EK1	28	230/460	Auto.	1.2	78.5	1.00	11.97	S, US, 12
1/3	1800	56C	**114626.00**	√	A6T17EK7	29	230/460	Auto.	1.3	74.5	1.00	11.97	S, US, 12
1/3	1800	56C	**117859.00**	√	C6T17EK11	38	230/460	T-Stat	1.3	74.5	1.00	11.97	S, US, 12
1/2	3600	56C	**114627.00**	√	A6T34EK2	31	230/460	Auto.	1.6	80.0	1.00	12.47	S, US, 12
1/2	1800	56C	**114628.00**	√	A6T17EK8	31	230/460	Auto.	1.7	80.0	1.00	12.47	S, US, 12
1/2	1800	56C	**116190.00**	√	C6T17XK23	28	230/460	T-Stat	2.4	68.0	1.00	13.44	S, US, 13
3/4	3600	56C	**114629.00**	√	A6T34XK2	36	230/460	Auto.	3.2	74.0	1.00	13.44	S, US, 13
3/4	1800	56C	**114630.00**	√	A6T17XK11	31	230/460	Auto.	3.0	75.0	1.00	13.94	S, US, 13
3/4	1800	56C	**116191.00**	√	C6T17XK24	31	230/460	T-Stat	3.0	75.5	1.00	13.44	S, US, 13
1	3600	56C	**114631.00**	D	A6T34XK3C	30	230/460	Auto.	3.6	72.5	1.00	13.44	S, US, 13
1	3600	56C	**119436.00**	√	A6T34XK25	38	230/460	Auto.	3.0	80.0	1.00	13.94	S, US, 13
1	1800	56C	**114632.00**	D	C6T17XK12	32	230/460	Auto.	3.6	77.0	1.00	14.50	S, US, 13
1	1800	56C	**119437.00**	√	A6T17XK23	49	230/460	Auto.	3.3	85.5	1.00	15.94	S, US, 13
1	1800	56C	**117850.00**	D	A6T17XK27	48	230/460	T-Stat	3.6	77.0	1.00	14.50	S, US, 13
1	1800	56C	**119438.00**	√	C6T17XK34	49	230/460	T-Stat	3.3	85.5	1.00	15.94	S, US, 13
1	1800	143TC	**121919.00**	√	C143T17XK3	48	230/460	T-Stat	3.3	85.5	1.00	14.50	S, US, 13
1 1/2	3600	56C	**114633.00**	D	A6T34XK4	45	230/460	Auto.	4.6	81.5	1.00	13.94	S, US, 13
1 1/2	3600	56C	**119439.00**	√	A6T34XK24	44	230/460	Auto.	4.0	84.0	1.00	14.41	S, US, 13
1 1/2	1800	56C	**114634.00**	D	A6T17XK13	45	230/460	Auto.	4.4	80.0	1.00	15.94	S, US, 13
1 1/2	1800	56C	**119440.00**	√	A6T17XK35	53	230/460	Auto.	4.6	86.5	1.00	15.94	S, US, 13
1 1/2	1800	56C	**117851.00**	D	C6T17XK28	48	230/460	T-Stat	4.4	80.0	1.00	15.94	S, US, 13
1 1/2	1800	56C	**119441.00**	√	C6T17XK36	51	230/460	T-Stat	4.6	86.5	1.00	18.94	S, US, 13
1 1/2	1800	145TC	**121920.00**	√	C145T17XK6	52	230/460	T-Stat	4.6	86.5	1.15	16.00	S, US, 13
2	3600	56C	**114635.00**	D	A6T34XK5	35	230/460	Auto.	6.0	78.8	1.00	13.94	S, US, 13
2	3600	56C	**119442.00**	√	A6T34XK26	67	230/460	Auto.	5.0	85.5	1.00	15.02	S, US, 13
2	1800	145TC	**121921.00**	√	C145T17XK7	55	230/460	Auto.	6.0	86.5	1.00	15.02	S, US, 13
2	1800	145TC	**121922.00**	√	C145T17XK8	56	230/460	T-Stat	6.0	86.5	1.00	16.50	S, US, 13
3	3600	56C	**114636.00**	D	A6T34XK6	47	230/460	Auto.	7.6	84.0	1.00	15.44	S, US, 13
3	3600	56C	**119443.00**	√	C6T34XK24	54	230/460	T-Stat	7.6	87.5	1.00	15.94	S, US, 13

Green items are premium efficient.

Explosion proof motors having T-Stats are inverter rated.
D - Item to be discontinued once inventory is depleted.
Note 12: TENV
Note 13: TEFC

Note: 230/460 Volt motors are suitable for use at 208 Volts 60HZ at 1.0 Service factor.

♥ Note listing on inside back flap.
Specifications are subject to change without notice.

Three Phase - C Face With Base - 575 Volts

Division I, Division II, Class I, Groups C&D - Class II, Groups F&G - W/Conduit Box

HP	SYN RPM 60 Hz	NEMA Frame	Catalogue Number	Availability	Model Number	App. Wgt. (lbs)	Voltage	Over-load Prot.	F. L. Amps @ 575 V	% F.L. Eff.	Service Factor	"C" Dim. (Inches)	♥Notes
1/3	1800	56C	**111214.00**	√	U6T17EK5G	38	575	Auto.	0.5	74.5	1.00	12.00	S, US, 12
1/2	1800	56C	**111157.00**	√	A6T17EK4H	35	575	Auto.	0.6	80.0	1.00	12.47	S, US, 12
3/4	1800	56C	**111216.00**	√	A6T17XK9H	42	575	Auto.	1.1	75.5	1.00	13.94	S, US, 13
1	1800	56C	**111160.00**	D	A6T17XK8H	48	575	Auto.	1.4	77.0	1.00	14.50	S, US, 13
1	1800	56C	**119784.00**	√	A6T17XK37A	45	575	Auto.	1.3	85.5	1.00	—	S, US, 13
1 1/2	1800	56C	**112101.00**	D	A6T17XK20F	45	575	Auto.	1.8	84.0	1.00	15.94	S, US, 13
1 1/2	1800	56C	**119723.00**	√	A6T17XK29A	46	575	Auto.	1.9	85.5	1.00	15.94	S, US, 13

Green items are premium efficient.

Explosion proof motors having T-Stats are inverter rated.
D - Item to be discontinued once inventory is depleted.
Note 12: TENV
Note 13: TEFC

♥ Note listing on inside back flap.
Specifications are subject to change without notice.

NEMA is a trademark of National Electrical Manufacturers Association and is not owned or controlled by Regal Beloit Corporation.

Pump Motors

- Jet pump, JM pump and carbonator pump motors
- Wash Down Duty® pump motors available
- Explosion proof jet pump motors available
- Three phase and single phase models
- Premium efficient JM pump motors available
- 1.15 service factor or better
- Jet pump motors have quick connect terminal boards
- Drip-proof and totally enclosed designs
- Drip-cover kits available on drip-proof designs
- Threaded jet pump motors have stainless steel shafts
- Jet pump single phase motors have automatic overload protection
- UL recognized and CSA certified

For a Full Selection of LEESON® Pump Motors please view the LEESON L1050E Catalogue at www.regalbeloit.com/Brands/LEESON

Applications:
Designed for various applications that you may find in the pumping industry where direct coupled motor to pump is required.

General Specifications:

- NEMA® 56 C face mounting flange
- Keyed shafts made of carbon steel
- Threaded shafts made of 416 grade stainless steel
- Dual rotation - keyed shaft motors only
- Quiet flow-through ventilation system
- Double sealed bearings on shaft end
- Terminal board with quick connects
- Locked shaft-end bearings
- Automatic overload protection
- UL recognized and CSA certified

Keyed Shaft - Drip-Proof - Single Phase - C Face Less Base

HP	SYN RPM 60 Hz	NEMA® Frame	Catalogue Number	Availability	Model Number	App. Wgt. (lbs)	Voltage	Over-load Prot.	F. L. Amps @ 230 V	Service Factor	"C" Dim. (Inches)	♥Notes
1/2	3600	S56C	**100204.00**	√	A4C34DC4H	19	115/208-230	Auto.	3.4	1.60	9.49	S, MX, 30
3/4	3600	S56C	**100205.00**	√	A4C34DC5J	21	115/208-230	Auto.	5.1	1.50	9.99	S, MX, 30
1	3600	S56C	**100722.00**	√	A4C34DC21F	24	115/208-230	Auto.	5.7	1.40	10.49	S, MX, 30
1 1/2	3600	56C	**110288.00**	√	U6C34DC18G	31	115/208-230	Auto.	9.0	1.30	11.34	S, US, 30
2	3600	56C	**110289.00**	√	U6C34DC19G	37	115/208-230	Auto.	10.5	1.25	12.34	S, US, 30
3	3600	56C	**117715.00**	√	U6K34DC19A	49	230	Auto.	12.8	1.15	13.55	S, US, 30, 53

♥ Note listing on inside back flap.
Specifications are subject to change without notice.

Threaded Shaft - Drip-Proof - Single Phase - C Face Less Base

HP	SYN RPM 60 Hz	NEMA Frame	Catalogue Number	Availability	Model Number	App. Wgt. (lbs)	Voltage	Over-load Prot.	F. L. Amps @ 230 V	Service Factor	"C" Dim. (Inches)	♥Notes
1/2	3600	S56J	**100207.00**	√	A4C34DC7J	19	115/208-230	Auto.	3.4	1.60	10.00	S, MX, 30
3/4	3600	S56J	**100208.00**	√	A4C34DC8H	21	115/208-230	Auto.	5.1	1.50	10.50	S, MX, 30
1	3600	S56J	**100723.00**	√	A4C34DC22E	23	115/208-230	Auto.	5.7	1.40	11.00	S, MX, 30
1 1/2	3600	56J	**119090.00**	√	A6C34DC75	25	115/208-230	Auto.	9.2	1.30	11.89	S, MX, 30
2	3600	56J	**119091.00**	√	A6C34DC76	38	115/208-230	Auto.	10.6	1.20	13.73	S, MX, 30
3	3600	56J	**119092.00**	√	U6K34DC21	48	115/208-230	Auto.	14.7	1.15	13.17	S, MX, 30, 53

♥ Note listing on inside back flap.
Specifications are subject to change without notice.

NEMA is a trademark of National Electrical Manufacturers Association
and is not owned or controlled by Regal Beloit Corporation.

Pump Motors

Jet Pump Motors - Single Phase

Threaded Shaft - Totally Enclosed - Single Phase - C Face Less Base

HP	SYN RPM 60 Hz	NEMA® Frame	Catalogue Number	Availability	Model Number	App. Wgt. (lbs)	Voltage	Over-load Prot.	F. L. Amps @ 230 V	Service Factor	"C" Dim. (Inches)	♥Notes
1/2	3600	56J	**113955.00**	√	A6C34FC44	22	115/208-230	Auto.	3.8	1.60	11.31	S, US, 30
3/4	3600	56J	**113956.00**	√	A6C34FC45	26	115/208-230	Auto.	5.0	1.50	11.81	S, US, 30
1	3600	56J	**113639.00**	√	A6C34FC41	30	115/208-230	Auto.	6.0	1.25	12.31	S, US, 30
1 1/2	3600	56J	**113640.00**	√	A6C34FC42	34	115/208-230	Auto.	8.5	1.00	12.81	S, US, 30
2	3600	56J	**113641.00**	√	U6C34FC34	41	115/208-230	Auto.	10.0	1.00	13.81	S, US, 30

♥ Note listing on inside back flap.
Specifications are subject to change without notice.

Threaded Shaft - Totally Enclosed - Single Phase - C Face With Base

HP	SYN RPM 60 Hz	NEMA Frame	Catalogue Number	Availability	Model Number	App. Wgt. (lbs)	Voltage	Over-load Prot.	F. L. Amps @ 230 V	Service Factor	"C" Dim. (Inches)	♥Notes
1/2	3600	56J	**113637.00**	√	A6C34FK49	23	115/208-230	Auto.	3.8	1.60	11.31	S, US, 30
3/4	3600	56J	**113638.00**	√	A6C34FK50	26	115/208-230	Auto.	5.0	1.50	11.81	S, US, 30
1	3600	56J	**113957.00**	√	A6C34FK53	28	115/208-230	Auto.	6.0	1.25	12.31	S, US, 30
1 1/2	3600	56J	**113958.00**	√	A6C34FK54	34	115/208-230	Auto.	8.5	1.00	12.81	S, US, 30
2	3600	56HJ	**113959.00**	√	U6C34FK55	43	115/208-230	Auto.	10.0	1.00	13.81	S, US, 30

♥ Note listing on inside back flap.
Specifications are subject to change without notice.

Threaded Shaft - Explosion Proof - Totally Enclosed - Single Phase - C Face Less Base Divisions I, Class I, Groups C&D - Class II, Groups F&G - W/Conduit Box

HP	SYN RPM 60 Hz	NEMA Frame	Catalogue Number	Availability	Model Number	App. Wgt. (lbs)	Voltage	Over-load Prot.	F. L. Amps @ 230 V	Service Factor	"C" Dim. (Inches)	♥Notes
1/2	3600	56J	**116188.00**	√	A6C34XC31	35	115/208-230	Auto.	4.2	1.00	13.96	S, US
3/4	3600	56J	**116186.00**	√	A6C34XC32	40	115/208-230	Auto.	5.3	1.00	14.46	S, US
1	3600	56J	**116185.00**	√	A6C34XC33	49	115/208-230	Auto.	6.2	1.00	14.96	S, US
11/2	3600	56J	**116183.00**	√	A6C34XC34	52	115/208-230	Auto.	7.7	1.00	14.95	S, US
2	3600	56J	**116181.00**	√	A6C34XC35	54	115/208-230	Auto.	10.0	1.00	15.45	S, US

♥ Note listing on inside back flap.
Specifications are subject to change without notice.

Drip-Cover Kits

Each kit includes one drip-cover, designed to protect motors from rain, snow and ice when mounted outdoors in a vertical position.

Drip Cover Kits For Jet Pump Motors

Frame	Catalogue Number	App. Wgt. (lbs)	♥Notes
48-S56	**175003.00**	2	
48-S56	**175298.00**	2	P
56 / 143T-145T	**175004.00**	2	

Note P: For motors having a "P" suffix on date code.

NEMA is a trademark of National Electrical Manufacturers Association and is not owned or controlled by Regal Beloit Corporation.

LEESON®

General Specifications:

- NEMA® 56 C face mounting flange
- Threaded shafts made of 303 grade stainless steel
- CCW rotation facing lead end
- Quiet flow-through ventilation system
- Double sealed bearings on shaft end
- Terminal board with quick connects
- Locked shaft end bearings
- Automatic overload protection on explosion proof jet pump motors
- UL recognized and CSA certified

Threaded Shaft - Drip-Proof - Three Phase - C Face Less Base

HP	SYN RPM 60 Hz	NEMA® Frame	Catalogue Number	Availability	Model Number	App. Wgt. (lbs)	Voltage	F. L. Amps @ 230 V	% F.L. EFF.	Service Factor	"C" Dim. (Inches)	♥Notes
1/3	3600	S56J	**102197.00**	C/A	C4T34DC25	15	230/460	1.4	68.0	1.35	9.50	S, US
1/3	1800	S56J	**103723.00**	√	C4T17DC50	16	230/460	1.8	64.3	1.35	10.00	S, MX
1/2	3600	S56J	**102198.00**	√	C4T34DC26	17	230/460	1.8	69.0	1.25	9.75	S, US
1/2	1800	S56J	**103724.00**	√	C4T17DC51	18	230/460	2.0	68.0	1.25	10.00	S, MX
3/4	3600	S56J	**101637.00**	√	C4T34DC20	18	230/460	2.4	79.0	1.15	10.00	S, US
3/4	1800	S56J	**103725.00**	√	C4T17DC52	19	230/460	2.8	75.5	1.25	10.50	S, MX
1	3600	S56J	**101638.00**	√	C4T34DC21	25	230/460	3.0	78.0	1.15	11.25	S, US
1	1800	56J	**117872.00**	√	C6T17DC89	26	230/460	4.2	78.5	1.15	10.87	S, US
1 1/2	3600	56J	**113891.00**	√	C6T34DC64	28	230/460	4.2	81.5	1.15	11.34	S, US
1 1/2	1800	56J	**117873.00**	√	C6T17DC87	29	230/460	5.6	78.5	1.15	11.37	S, US
2	3600	56J	**113892.00**	√	C6T34DC65	33	230/460	5.6	82.5	1.15	12.09	S, US
2	1800	56J	**117874.00**	√	C6T17DC88	34	230/460	6.2	78.5	1.15	11.87	S, US
3	3600	56J	**113893.00**	√	C6T34DC66	36	230/460	7.6	84.0	1.15	12.34	S, US
5	3600	56J	**116698.00**	√	C6T34DC92	45	230/460	12.4	85.5	1.15	13.88	S, US

C/A - Check Availability.

♥ Note listing on inside back flap.
Specifications are subject to change without notice.

Threaded Shaft - Drip-Proof - Three Phase - C Face With Base

HP	SYN RPM 60 Hz	NEMA Frame	Catalogue Number	Availability	Model Number	App. Wgt. (lbs)	Voltage	F. L. Amps @ 230 V	% F.L. EFF.	Service Factor	"C" Dim. (Inches)	♥Notes
1/2	3600	S56J	**102199.00**	√	C4T34DK8	17	230/460	1.8	69.0	1.25	9.75	S, US
1/2	1800	S56J	**103726.00**	√	C4T17DK12	18	230/460	2.0	68.0	1.25	11.75	S, MX
3/4	3600	S56J	**101776.00**	√	C4T34DK5	18	230/460	2.4	79.0	1.15	10.00	S, US
3/4	1800	S56J	**103727.00**	√	C4T17DK13	19	230/460	2.8	75.0	1.25	11.00	S, MX
1	3600	S56J	**101775.00**	√	C4T34DK6	26	230/460	3.0	78.0	1.15	11.25	S, US
1	1800	56J	**117875.00**	√	C6T17DK34	28	230/460	4.2	78.5	1.15	10.87	S, US
1 1/2	3600	56J	**114203.00**	√	C6T34DK5	33	230/460	4.2	81.5	1.15	11.34	S, US
1 1/2	1800	56J	**117876.00**	√	C6T17DK35	34	230/460	5.6	78.5	1.15	11.37	S, US
2	3600	56J	**114202.00**	√	C6T34DK6	35	230/460	5.6	82.5	1.15	12.12	S, US
3	3600	56HJ	**114201.00**	√	C6T34DK7	35	230/460	7.6	84.0	1.15	12.34	S, US
5	3600	56HJ	**116699.00**	√	C6T34DK18	47	230/460	12.4	85.5	1.15	13.68	S, US

Note: 230/460 Volt motors are suitable for use at 208 Volts 60HZ at 1.0 Service factor.

♥ Note listing on inside back flap.
Specifications are subject to change without notice.

NEMA is a trademark of National Electrical Manufacturers Association and is not owned or controlled by Regal Beloit Corporation.

Pump Motors

Jet Pump Motors - Three Phase

Threaded Shaft - Totally Enclosed - Three Phase - C Face Less Base

HP	SYN RPM 60 Hz	NEMA® Frame	Catalogue Number	Availability	Model Number	App. Wgt. (lbs)	Voltage	F. L. Amps @ 230 V	% F.L. EFF.	Service Factor	"C" Dim. (Inches)	♥Notes
1/2	3600	56J	**114931.00**	√	C6T34FC49	23	230/460	2.0	72.0	1.15	10.81	S, US
3/4	3600	56J	**114208.00**	√	C6T34FC37	23	230/460	2.4	75.5	1.15	11.31	S, US
1	3600	56J	**114207.00**	√	C6T34FC38	24	230/460	3.2	77.0	1.15	11.31	S, US
1 1/2	3600	56J	**119453.00**	√	C6T34FC124	41	230/460	4.0	84.0	1.15	12.66	S, US
2	3600	56J	**119455.00**	√	C6T34FC125	44	230/460	4.8	85.5	1.15	13.66	S, US
3	3600	56J	**119456.00**	√	C6T34FC126	44	230/460	8.0	86.5	1.15	14.16	S, US

Green items are premium efficient.

♥ Note listing on inside back flap.
Specifications are subject to change without notice.

Threaded Shaft - Totally Enclosed - Three Phase - C Face With Base

HP	SYN RPM 60 Hz	NEMA Frame	Catalogue Number	Availability	Model Number	App. Wgt. (lbs)	Voltage	F. L. Amps @ 230 V	% F.L. EFF.	Service Factor	"C" Dim. (Inches)	♥Notes
3/4	3600	56J	**113028.00**	√	C6T34FK34	23	230/460	2.4	75.5	1.15	10.78	S, US
1	3600	56J	**113029.00**	√	C6T34FK35	24	230/460	3.2	77.0	1.15	10.78	S, US
1 1/2	3600	56J	**119452.00**	√	C6T34FK134	34	230/460	4.0	84.0	1.15	12.66	S, US
2	3600	56HJ	**119454.00**	√	C6T34FK135	44	230/460	4.8	85.5	1.15	13.66	S, US
3	3600	56HJ	**119457.00**	√	C6T34FK136	56	230/460	8.0	86.5	1.15	14.16	S, US

Green items are premium efficient.

♥ Note listing on inside back flap.
Specifications are subject to change without notice.

Threaded Shaft - Explosion Proof - TEFC/TENV Three Phase - C Face Less Base Divisions I, Class I, Groups C&D - Class II, Groups F&G - W/Conduit Box

HP	SYN RPM 60 Hz	NEMA Frame	Catalogue Number	Availability	Model Number	App. Wgt. (lbs)	Voltage	F. L. Amps @ 230 V	% F.L. EFF.	Service Factor	"C" Dim. (Inches)	♥Notes
1/2	3600	56J	**116187.00**	√	A6T34EC28	33	230/460	1.6	80.0	1.00	12.98	S, US, 12
1	3600	56J	**119424.00**	√	A6T34XC49	36	230/460	3.0	80.0	1.00	14.45	S, US, 13
1 1/2	3600	56J	**119429.00**	√	A6T34XC50	48	230/460	4.0	84.0	1.00	15.45	S, US, 13
2	3600	56J	**119434.00**	√	A6T34XC52	50	230/460	5.0	85.5	1.00	16.95	S, US, 13

Green items are premium efficient.

Note 12: TENV
Note 13: TEFC

Note: 230/460 Volt motors are suitable for use at 208 Volts 60HZ at 1.0 Service factor.

♥ Note listing on inside back flap.
Specifications are subject to change without notice.

NEMA is a trademark of National Electrical Manufacturers Association and is not owned or controlled by Regal Beloit Corporation.

Wash Down Duty® three phase jet pump motors for industrial service. These motors include all of the features of White Duck Washguard motors with the addition of a 56J threaded shaft for use on jet pumps. For demanding pump applications in wet, humid, or washdown environments.

Washguard - Jet Pump - Threaded Shaft Three Phase - TEFC - C Face Less Base

HP	SYN RPM 60 Hz	NEMA® Frame	Catalogue Number	Availability	Model Number	App. Wgt. (lbs)	Voltage	F. L. Amps @ 230 V	% F.L. EFF.	Service Factor	"C" Dim. (Inches)	♥Notes
3/4	3600	56J	**116774.00**	√	C6T34WC14	23	230/460	2.4	75.5	1.15	11.37	S, US
1	3600	56J	**116775.00**	√	C6T34WC15	35	230/460	3.2	77.0	1.15	11.37	S, US
1 1/2	3600	56J	**119459.00**	√	C6T34WC24	44	230/460	4.0	84.0	1.15	12.87	S, US
2	3600	56J	**119460.00**	√	C6T34WC25	50	230/460	4.8	85.5	1.15	13.87	S, US
3	3600	56J	**119462.00**	√	C6T34WC26	55	230/460	8.0	86.5	1.15	14.37	S, US

Green items are premium efficient.

♥ Note listing on inside back flap.
Specifications are subject to change without notice.

Washguard - Jet Pump - Threaded Shaft Three Phase - TEFC - C Face With Base

HP	SYN RPM 60 Hz	NEMA Frame	Catalogue Number	Availability	Model Number	App. Wgt. (lbs)	Voltage	F. L. Amps @ 230 V	% F.L. EFF.	Service Factor	"C" Dim. (Inches)	♥Notes
3/4	3600	56J	**116779.00**	√	C6T34WK12	24	230/460	2.4	75.5	1.15	11.37	S, US
1	3600	56J	**116780.00**	√	C6T34WK13	36	230/460	3.2	77.0	1.15	11.37	S, US
1 1/2	3600	56J	**119458.00**	√	C6T34WK30	45	230/460	4.0	84.0	1.15	12.87	S, US
2	3600	56J	**119461.00**	√	C6T34WK31	51	230/460	4.8	85.5	1.15	13.87	S, US
3	3600	56HJ	**119463.00**	√	C6T34WK32	56	230/460	8.0	86.5	1.15	14.37	S, US

Green items are premium efficient.

Note: 230/460 Volt motors are suitable for use at 208 Volts 60HZ at 1.0 Service factor.

♥ Note listing on inside back flap.
Specifications are subject to change without notice.

NEMA is a trademark of National Electrical Manufacturers Association and is not owned or controlled by Regal Beloit Corporation.

Pump Motors

ecoSaver™

Features:

- 303 stainless shaft
- Capacitor run low speed, PSC high speed
- Meets California Energy Commission Appliance Regulations 2008
- Integrated timer interface
- Timer mode or manual mode
- Over current protection
- Battery backup - program saver
- LCD display with backlight
- Class B insulation
- High efficiency - high and low speed
- Rotation - CCW pump end

Jet Pump - 2-Speed - With Timer
Single Phase - Drip Proof - C Face Less Base

HP	SYN RPM 60 Hz	NEMA® Frame	Catalogue Number	Availability	Model Number	App. Wgt. (lbs)	Voltage	Over Load Prot.	Service Factor Amps	Service Factor	"C" Dim. (Inches)	♥Notes
3/4 - .10	3600/1800	56J	**117913.00**	√	F56AA73F16T	26	115	Auto	12.2/2.2	1.50	12.30	S, MX
1 - .12	3600/1800	56J	**117914.00**	√	F56AA74F16T	30	230	Auto	6.1/1.5	1.40	13.05	S, MX
2 - .25	3600/1800	56J	**117915.00**	√	K56AB47F16T	42	230	Auto	11.0/1.6	1.20	13.55	S, MX
3 - .38	3600/1800	56J	**117916.00**	√	187855T	45	230	Auto	13.8/4.0	1.15	14.29	S, MX

♥ Note listing on inside back flap.
Specifications are subject to change without notice.

Carbonator Pump Motors

Features:

- Resilient base
- Ball bearing designs
- Completely interchangeable with OEM units
- Automatic reset thermal protector
- UL recognized and CSA certified

HP	SYN RPM 60 Hz	NEMA Frame	Catalogue Number	Availability	Model Number	App. Wgt. (lbs)	Voltage	Over Load Prot.	F.L. Amps	Service Factor	"C" Dim. (Inches)	♥Notes
1/4	1800	48Y	**4725**	√	5KH32DN5587X	12.5	115	Auto	5.0	1.0	7.69	S, MX
1/4	1800/1500	48Y	**HG451**	√	5KH32GNB813AX	14	208-240	Auto	2.3-2.4	1.0	7.69	S, MX
1/3	1800	48Y	**4406**	√	5KH32FN5586X	13.5	115	Auto	5.6	1.15	7.69	S, MX
1/3	1800/1500	48Y	**4805**	√	5KH32GNB811X	14	100-120/200-240	Auto	5.5-5.6/2.7-2.8	1.0	7.69	S, MX
1/3	1800/1500	48Y	**HG450**	√	5KH32GNB812X	14	220-240	Auto	2.7-2.7	1.0	7.69	S, MX
1/3	1800	48Y	**H682**	√	5KH32ENA443AX	13	115	Auto	6.1	1.0	7.69	S, MX
1/3	1800/1500	48Y	**H683**	√	5KH33GNA444AX	14	100-120/200-240	Auto	5.5-5.6/2.7-2.8	1.0	7.94	S, MX
1/2	1800/1500	48Y	**H684**	√	5KH36MNA445AX	17	100-120/200-240	Auto	7.1-7.2/3.4-3.6	1.0	8.75	S, MX
3/4	1800	48Y	**HG714**	√	5KH37PNA479AX	19	115/230	Auto	10.4/5.2	1.0	9.15	S, MX

♥ Note listing on inside back flap.
Specifications are subject to change without notice.

Split Phase - Drip-Proof - Double Shaft - Rigid Base

HP	SYN RPM 60 Hz	NEMA Frame	Catalogue Number	Availability	Model Number	App. Wgt. (lbs)	Voltage	Over Load Prot.	F.L. Amps	Service Factor	"C" Dim. (Inches)	♥Notes
1/3	1800/1500	48Y	**H712**	√	5KH32GNB815X	14	100-120/200-240	Auto	5.5-5.6/2.7-2.8	1.0	9.47	S, MX

♥ Note listing on inside back flap.
Specifications are subject to change without notice.

NEMA is a trademark of National Electrical Manufacturers Association and is not owned or controlled by Regal Beloit Corporation.

LEESON®

General Specifications:

For use with close-coupled pumps having NEMA® JM mounting and shaft dimensions. In such applications, the pump impeller is mounted directly on the motor shaft. For use where the environment is relatively clean and dry. For outdoor use, an enclosure or drip cover may be preferred.

Features:

- Open drip-proof construction with rigid base mounting
- Locked bearing on shaft end limits axial shaft movement
- Drip cover kits available
- UL recognized and CSA certified
- Single phase designs are capacitor start, induction run
- All 180 and 210 frame rolled steel motors have class F insulation

Single Phase - Drip-Proof - C Face With Base

HP	SYN RPM 60 Hz	NEMA® Frame	Catalogue Number	Availability	Model Number	App. Wgt. (lbs)	Voltage	F.L. Amps @ 230 V	Service Factor	"C" Dim. (Inches)	♥Notes
1	1800	143JM	**120996.00**	√	C143C17DK1	42	115/208-230	6.4	1.15	13.91	S, US, 38
1 1/2	1800	145JM	**120994.00**	√	C145K17DK8	48	115/208-230	8.6	1.15	14.91	S, US, 38, 53
2	3600	145JM	**121190.00**	√	C145C34DK3	47	115/208-230	10.5	1.15	14.91	S, US, 38
2	1800	145JM	**120995.00**	√	C145K17DK9	47	115/208-230	10.5	1.15	15.41	S, US, 38, 53
2	1800	182JM	**132073.00**	√	C182C17DK3	70	115/208-230	12.4	1.15	14.82	S, MX, 45
3	3600	182JM	**131640.00**	√	C182K34DK1	80	115/208-230	15.2	1.15	15.82	S, MX, 45, 53
3	1800	182JM	**131604.00**	√	C182C17DK2	76	115/208-230	16.8	1.15	15.82	S, MX, 45
5	3600	184JM	**131641.00**	√	C184K34DK3	95	230	22.0	1.15	16.32	S, MX, 45, 53
5	1800	184JM	**131605.00**	√	C184K17DK14	87	230	21.0	1.15	16.32	S, MX, 45, 53
7 1/2	3600	213JM	**140642.00**	√	C213K34DK2	109	230	37.0	1.15	18.42	S, MX, 37
7 1/2	1800	215JM	**140665.00**	√	C215K17DK1	119	230	36.0	1.15	18.38	S, MX, 37, 53
10	3600	215JM	**140644.00**	√	C215K34DK2	135	230	47.0	1.15	19.92	S, MX, 37
10	1800	215JM	**140666.00**	C/A	C215K17DK2	147	230	43.0	1.15	19.88	S, MX, 37, 53

C/A - Check Availability.

♥ Note listing on inside back flap.
Specifications are subject to change without notice.

NEMA is a trademark of National Electrical Manufacturers Association and is not owned or controlled by Regal Beloit Corporation.

Pump Motors

JM Pump Motors - TEFC - Single Phase

General Specifications:

Designed for continuous duty service on close-coupled pumps using NEMA® JM mounting provisions. All motors have C Face with base and NEMA JM pump shaft.

Features:

- Cooling air exhausts at shaft end for maximum cooling
- Locked bearing shaft end
- Drip-cover kits available

Electrical Features:

- High efficiency copper windings
- UL and CSA recognized designs
- Single phase designs are capacitor start/ capacitor run
- Class F Insulation

Single Phase - TEFC - C Face With Base

HP	SYN RPM 60 Hz	NEMA® Frame	Catalogue Number	Availability	Model Number	App. Wgt. (lbs)	Voltage	F.L. Amps	Service Factor	"C" Dim. (Inches)	♥Notes
3	3600	182JM	**132457.00**	√	C182K34FC2	82	230	13.6	1.15	18.59	S, MX
5	3600	184JM	**132458.00**	√	C184K34FK6	95	230	19.8	1.0	18.59	S, MX
7 1/2	3600	213JM	**141281.00**	√	C213F34FK2	133	230	32.0	1.0	20.59	S, MX
10	3600	215JM	**141282.00**	√	C215K34FK3	156	230	41.5	1.15	22.09	S, MX

♥ Note listing on inside back flap.
Specifications are subject to change without notice.

NEMA is a trademark of National Electrical Manufacturers Association and is not owned or controlled by Regal Beloit Corporation.

LEESON®

CUSTOMER CARE—BUILT ON CUSTOMER INPUT.

Our customer care process revolves around one thing—listening—before, during and after your purchase. Regal representatives are ready to assist you 24/7 with LEESON® product, technical and service support needs.

TRUST LEESON® MOTOR DESIGN AND MANUFACTURING EXPERIENCE TO DELIVER

THE PERFECT SOLUTION

FOR YOUR APPLICATION.

MORE THAN 100 YEARS OF LARGE MOTOR EXPERTISE.

For over a century, dedicated LEESON motor specialists have provided large motor solutions for countless industries and applications. This expertise ensures you receive the best product—stock or custom—for your unique installation. Tap our sales, technical and support teams to configure the perfect solution for your mission-critical application.

BROAD STOCK PRODUCT PORTFOLIO ENSURES RAPID RESPONSE.

LEESON motors carry a broad range of stock products across an extensive network of distribution centers to help deliver the right product at the right time. Trust LEESON motors to deliver solutions that help you stay up and running.

MODULAR MANUFACTURING DELIVERS APPLICATION SPECIFIC PRODUCTS FASTER.

Our modular manufacturing design approach enables the configuration of products in compressed time frames. Get the product that meets your specifications without compromising features or functionality.

ACCESSORIES ENABLE CUSTOMIZED SOLUTIONS.

An extensive range of specialized motor accessories helps deliver flexible, application-specific solutions. From overload protection, voltage surge protection to vibration protection, your trusted LEESON motor representative will help you design the ideal large motor for your needs.

Washguard® Motors

- USDA-approved white epoxy finish
- Stainless steel motors
- Encapsulated stainless steel motors available
- NEMA® and IEC flange motors
- Three phase, single phase and DC washdown duty motors
- AC and DC washdown gearmotors
- Rigid base and C face mount types
- BISSC approved designs
- Double lip contact seals and v-ring seals used for shaft seals
- Wash Down Duty® brakemotors and pump motors available
- UL recognized and CSA certified

Applications:
Designed to meet the demanding washdown conditions that you may find in food processing plants, chemical processing, pharmaceutical plants and the beverage and brewing industries.

NEMA is a trademark of National Electrical Manufacturers Association and is not owned or controlled by Regal Beloit Corporation.

Premium StainlessDuck

Maximum service in critically clean or corrosive environments

- All exterior components of 300 series stainless steel
- Endshields o-ring sealed to frame
- 3 phase designs meet IP56 enclosure protection
- AC, DC and IEC designs
- 1 phase designs meet IP55 enclosure protection
- (SGRs) shaft grounding rings available
- Full fact nameplate is laser etched

SSTDuck

Stainless Steel Tough for demanding washdown applications

- All exterior components of 300 series stainless steel, including motor frame, endshield and conduit box castings
- Moisture resistant sealant between frame and endbells
- Full-fact nameplate is laser-etched on the motor frame
- Four locations for T-drains provided on each endshield
- Meets IP55 enclosure protection

WhiteDuck

Enhanced performance in wet, humid areas

- Our original moisture-shedding "duck" motor
- USDA-approved white epoxy finish
- Stainless steel shaft, conduit box cover, nameplate, fan guard
- Four endshield drains
- Meets IP55 enclosure protection

ExtremeDuck® Ultra

Revolutionary designed stainless steel motors are built to be the last stainless steel washdown motors you will ever need!

- Total winding encapsulation using an epoxy resin
- All exterior components are 300-Series stainless steel
- Shaft grounding rings (SGRs)
- Meets IP69K enclosure protection
- Pre-lubricated double-sealed bearings
- Full fact nameplate is laser etched

Washguard® Motors

WASHGUARD MOTORS ARE BUILT TO HANDLE HIGH-PRESSURE WASHDOWNS!**

Stainless steel or white polypropylene fan guard on all Washguard motor frames.

Composite fan is chemically-inert and static-free. Fan is positively positioned on shaft on TEFC designs only.

Stainless steel, "full-fact" nameplate includes information on motor efficiency and connections. Readable even after repeated washdowns.

USDA-approved, white epoxy finish for superior protection and resistance to caustic cleaning solutions.

Encapsulated starting switch (single-phase Washguard motors) uses a patented, field-proven design that is immune to moisture, shock and vibration. No moving parts or exposed contacts to become corroded or inoperable.

Moisture-resistant shaft system includes 303 Stainless steel shaft and lubricated, spring-loaded contact seals in each endshield. Patented V-ring Forsheda seal on shaft end to deflect water (see inset). Double-sealed, oversized bearings lubricated with Exxon POLYREX®* EM high temperature, moisture-resistant lubricant. Bearing cavities packed to further retard entrance of moisture.

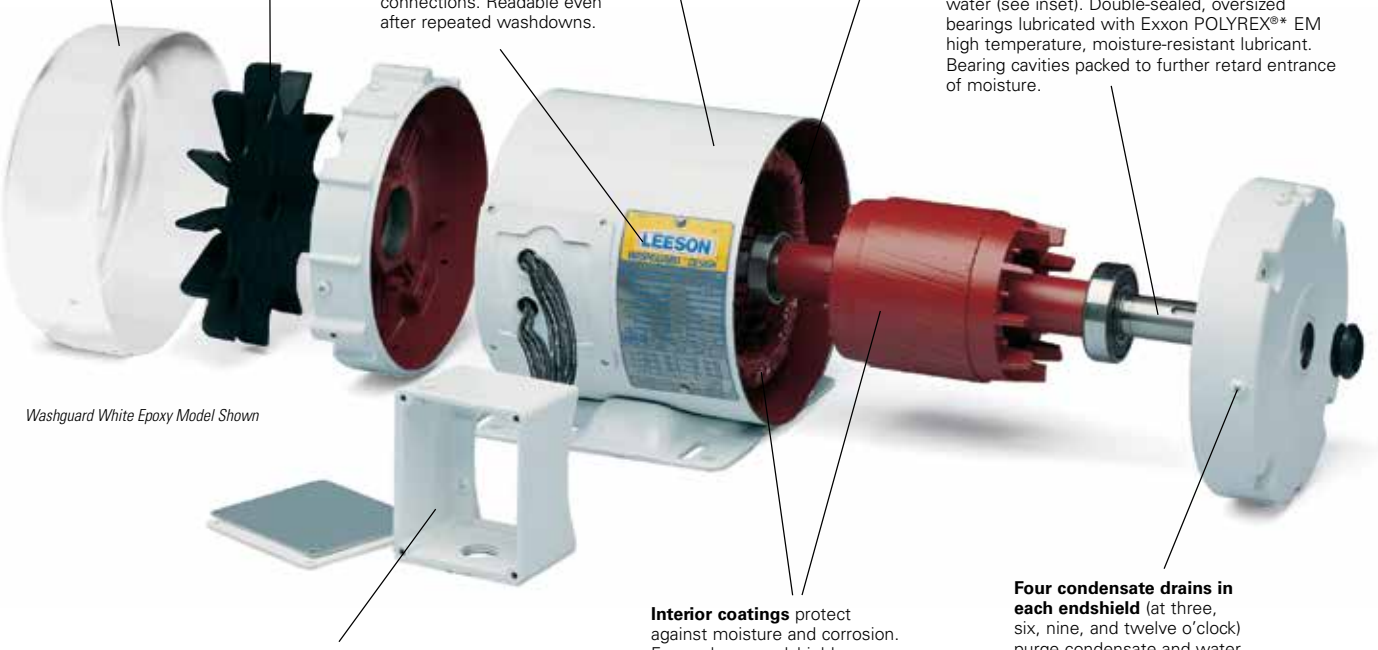

Washguard White Epoxy Model Shown

Cast, oversized conduit box with tough, high-temperature nitrile gaskets and Stainless steel cover and hardware. Oversized design with threaded entrance. All machined fits are sealed and nylon gaskets are used under bolt heads.

Interior coatings protect against moisture and corrosion. Frame, base, endshields, rotor, and interior components are protected by enamel and polyester compounds of outstanding adhesion and resistance to moisture, acids, alkalies, and oils. High temperature, moisture resistant IRIS® insulation system assures long life on inverter service. Windings are immersed and cured in polyester insulating compound.

Four condensate drains in each endshield (at three, six, nine, and twelve o'clock) purge condensate and water which may enter the motor.

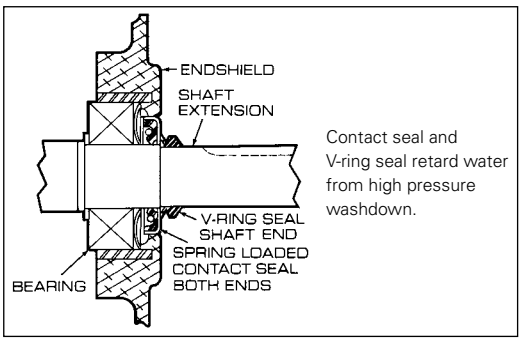

Contact seal and V-ring seal retard water from high pressure washdown.

**** Also excellent for applications requiring a motor that is "tropicalized"!**

*Exxon and Polyrex are trademarks of Exxon Mobil Corporation and are not owned or controlled by Regal Beloit Corporation.

Washguard® Motors

Single Phase - White Epoxy Painted

Single Phase - TEFC - Rigid Base
Featuring Electronic Solid State Encapsulated Switch

HP	SYN RPM 60 Hz	NEMA® Frame	Catalogue Number	Availability	Model Number	App. Wgt. (lbs)	Voltage	F.L. Amps @230 V	Service Factor	"C" Dim. (Inches)	♥Notes
1/2	1800	56	**112431.00**	√	C6C17WB1	24	115/208-230	4.4	1.15	10.81	S, US
3/4	1800	56	**112432.00**	√	C6C17WB2	31	115/208-230	5.4	1.15	11.31	S, US
1	1800	56	**112626.00**	√	C6C17WB3	33	115/208-230	6.4	1.15	11.81	S, US
1	1800	143T	**120589.00**	√	C143C17WB1	34	115/208-230	6.4	1.15	12.25	S, US
1 1/2	1800	145T	**120590.00**	√	C145C17WB1	47	115/208-230	9.5	1.15	13.75	S, US
2	1800	182T	**131571.00**	C/A	C182C17WB3	60	115/208-230	12.6	1.15	13.46	S, MX

C/A - Check Availability.

♥ Note listing on inside back flap.
Specifications are subject to change without notice.

Single Phase - TEFC - C Face With Base
Featuring Electronic Solid State Encapsulated Switch

HP	SYN RPM 60 Hz	NEMA Frame	Catalogue Number	Availability	Model Number	App. Wgt. (lbs)	Voltage	F.L. Amps @230 V	Service Factor	"C" Dim. (Inches)	♥Notes
1/3	3600	56C	**113580.00**	√	C6C34WK2	27	115/208-230	2.6	1.15	10.69	S, US
1/3	1800	56C	**112526.00**	√	C6C17WK2	28	115/208-230	3.2	1.15	10.69	S, US
1/2	3600	56C	**113581.00**	√	C6C34WK3	25	115/208-230	3.6	1.15	10.69	S, US
1/2	1800	56C	**112527.00**	√	C6C17WK3	28	115/208-230	4.4	1.15	11.19	S, US
3/4	3600	56C	**113582.00**	√	C6C34WK4	31	115/208-230	5.0	1.15	11.69	S, US
3/4	1800	56C	**112528.00**	√	C6C17WK4	30	115/208-230	5.4	1.15	11.69	S, US
1	3600	56C	**113583.00**	√	C6C34WK6	31	115/208-230	6.0	1.15	12.19	S, US
1	1800	56C	**112529.00**	√	C6C17WK5	33	115/208-230	6.4	1.15	12.19	S, US
1 1/2	3600	56C	**113584.00**	√	C6C34WK5	36	115/208-230	8.5	1.15	12.69	S, US
1 1/2	1800	56HC	**113300.00**	√	C6C17WK6	45	115/208-230	9.5	1.15	13.69	S, US
2	3600	56HC	**114637.00**	√	C6C34WK9	43	115/208-230	10.0	1.00	13.69	S, US

♥ Note listing on inside back flap.
Specifications are subject to change without notice.

Single Phase - TEFC - C Face Less Base
Featuring Electronic Solid State Encapsulated Switch

HP	SYN RPM 60 Hz	NEMA Frame	Catalogue Number	Availability	Model Number	App. Wgt. (lbs)	Voltage	F.L. Amps @230 V	Service Factor	"C" Dim. (Inches)	♥Notes
1/3	3600	56C	**114310.00**	√	C6C34WC2	25	115/208-230	2.6	1.15	10.69	S, US
1/3	1800	56C	**114311.00**	√	C6C17WC2	27	115/208-230	3.2	1.15	10.69	S, US
1/2	3600	56C	**114312.00**	√	C6C34WC3	25	115/208-230	3.6	1.15	10.69	S, US
1/2	1800	56C	**114313.00**	√	C6C17WC3	29	115/208-230	4.4	1.15	11.19	S, US
3/4	3600	56C	**114314.00**	√	C6C34WC4	31	115/208-230	5.0	1.15	11.69	S, US
3/4	1800	56C	**114315.00**	√	C6C17WC4	31	115/208-230	5.4	1.15	11.69	S, US
1	3600	56C	**114316.00**	√	C6C34WC5	29	115/208-230	6.0	1.15	12.19	S, US
1	1800	56C	**114317.00**	√	C6C17WC5	34	115/208-230	6.4	1.15	12.19	S, US
1 1/2	3600	56C	**114318.00**	√	C6C34WC6	36	115/208-230	8.5	1.15	12.69	S, US
1 1/2	1800	56C	**114319.00**	√	C6C17WC6	43	115/208-230	9.5	1.15	13.69	S, US

♥ Note listing on inside back flap.
Specifications are subject to change without notice.

NEMA is a trademark of National Electrical Manufacturers Association
and is not owned or controlled by Regal Beloit Corporation.

Washguard® Motors

White Epoxy Painted - Three Phase

Three Phase - TENV and TEFC C Face With Base - 230/460 Volts

HP	SYN RPM 60 Hz	NEMA® Frame	Catalogue Number	Availability	Model Number	App. Wgt. (lbs)	Voltage	F. L. Amps @ 230 V	% F.L. EFF.	Service Factor	"C" Dim. (Inches)	♥Notes
1/4	1800	56C	**112523.00**	√	C6T17WK8	21	230/460	1.1	67.0	1.15	10.69	S, US, 13
1/3	3600	56C	**116641.00**	C/A	C6T34VK15	22	230/460	1.1	77.0	1.15	10.08	S, US, 12
1/3	1800	56C	**112547.00**	√	C6T17WK9	22	230/460	1.7	68.0	1.15	10.69	S, US, 13
1/2	3600	56C	**113588.00**	√	C6T34VK3	26	230/460	1.5	82.5	1.15	10.58	S, US, 12
1/2	1800	56C	**113586.00**	√	C6T17VK2	23	230/460	1.8	78.5	1.15	10.06	S, US, 12
1/2	1800	56C	**112429.00**	√	C6T17WK1	22	230/460	2.0	74.0	1.15	11.19	S, US, 13
1/2	1200	56C	**115743.00**	√	C6T11VK1	24	230/460	2.3	77.0	1.15	11.56	S, US, 12
3/4	3600	56C	**113589.00**	√	C6T34VK2	24	230/460	2.4	84.0	1.15	11.08	S, US, 12
3/4	1800	56C	**113587.00**	√	C6T17VK1	30	230/460	2.5	80.0	1.15	10.56	S, US, 12
3/4	1800	56C	**112430.00**	√	C6T17WK2	26	230/460	2.8	77.0	1.15	11.19	S, US, 13
3/4	1200	56HC	**115744.00**	√	C6T11VK2	25	230/460	3.0	78.5	1.15	13.06	S, US, 12
1	3600	56C	**113590.00**	√	C6T34VK4	34	230/460	2.6	85.5	1.15	11.58	S, US, 12
1	1800	56HC	**119476.00**	√	C6T17WK44	35	230/460	3.2	85.5	1.15	12.87	S, US, 13
1	1800	143TC	**121867.00**	√	C143T17WK11	37	230/460	3.2	85.5	1.15	13.25	S, US, 13
1	1200	56HC	**119478.00**	√	C6T11WK11	45	230/460	3.8	82.5	1.15	13.37	S, US, 13
1 1/2	3600	56HC	**113591.00**	√	C6T34VK5	44	230/460	3.8	84.0	1.15	12.56	S, US, 12
1 1/2	1800	145TC	**121871.00**	√	C145T17WK31	53	230/460	4.8	86.5	1.15	13.25	S, US, 13
1 1/2	1800	56HC	**119480.00**	√	C6T17WK45	45	230/460	4.8	86.5	1.15	13.37	S, US, 13
1 1/2	1200	184TC	**132563.00**	√	C182T11WK1	89	230/460	5.6	87.5	1.15	15.96	S, US, 13
2	3600	56HC	**119482.00**	√	C6T34WK33	51	230/460	4.8	85.5	1.15	13.37	S, US, 13
2	3600	145TC	**122185.00**	√	C145T34WK37	49	230/460	4.8	85.5	1.15	13.43	S, US, 13
2	1800	56HC	**119483.00**	√	C6T17WK46	47	230/460	5.8	86.5	1.15	13.87	S, US, 13
2	1800	145TC	**121868.00**	√	C145T17WK30	49	230/460	5.8	86.5	1.15	13.75	S, US, 13
3	3600	145TC	**121870.00**	√	C145T34WK28	46	230/460	7.6	89.5	1.15	13.75	S, US, 13
3	3600	182TC	**132199.00**	√	C182T34WK1	80	230/460	7.6	86.5	1.25	14.97	S, MX, 13
3	1800	182TC	**132198.00**	√	C182T17WK13	80	230/460	7.8	89.5	1.15	14.47	S, MX, 13
5	3600	184TC	**132200.00**	√	C184T34WK10	79	230/460	12.0	88.5	1.15	14.47	S, MX, 13
5	1800	184TC	**132201.00**	√	C184T17WK15	84	230/460	12.8	89.5	1.15	14.97	S, MX, 13
7 1/2	3600	184TC	**132205.00**	√	C184T34WK21	94	230/460	17.6	89.5	1.15	15.97	S, MX, 13
7 1/2	3600	213TC	**141120.00**	√	C213T34WK6	140	230/460	17.8	89.5	1.15	20.57	S, MX, 13
7 1/2	1800	213TC	**140822.00**	√	C213T17WK9	135	230/460	21.4	91.7	1.25	18.71	S, MX, 13
10	3600	215TC	**140823.00**	√	C215T34WK9	129	230/460	23.6	90.2	1.15	21.82	S, MX, 13
10	1800	215TC	**140821.00**	√	C215T17WK9	145	230/460	26.6	91.7	1.25	19.71	S, MX, 13

Green items are premium efficient.

C/A - Check Availability.
Note 12: TENV
Note 13: TEFC

Note: 230/460 Volt motors are suitable for use at 208 Volts 60HZ at 1.0 Service factor.

♥ Note listing on inside back flap.
Specifications are subject to change without notice.

NEMA is a trademark of National Electrical Manufacturers Association and is not owned or controlled by Regal Beloit Corporation.

LEESON®

Three Phase - TEFC - C Face With Base - 575 Volts

HP	SYN RPM 60 Hz	NEMA® Frame	Catalogue Number	Availability	Model Number	App. Wgt. (lbs)	Voltage	F. L. Amps @ 575 V	% F.L. EFF.	Service Factor	"C" Dim. (Inches)	♥Notes
1/4	1800	56C	**112520.00**	√	C6T17WK5	24	575	0.4	68.0	1.15	10.69	S, US
1/3	1800	56C	**112521.00**	√	C6T17WK6	22	575	0.7	68.0	1.15	10.69	S, US
1/2	1800	56C	**112483.00**	√	C6T17WK3	28	575	0.8	74.0	1.15	10.69	S, US
3/4	1800	56C	**112484.00**	√	C6T17WK4	24	575	1.1	77.0	1.15	11.19	S, US
1	1800	56C	**119479.00**	√	C6T17WK381	35	575	1.3	85.5	1.15	12.62	S, US
1	1800	143TC	**121073.00**	D	C145T17WK4D	30	575	1.3	84.0	1.15	12.25	S, US
1	1800	143TC	**121950.00**	√	C143T17WK17A	37	575	1.3	85.5	1.15	13.25	S, US
1 1/2	1800	143TC	**121951.00**	√	C145T17WK42A	48	575	1.9	86.5	1.15	13.25	S, US
2	1800	145TC	**121952.00**	√	C145T17WK43A	49	575	2.3	86.5	1.25	13.75	S, US
3	1800	184TC	**132264.00**	√	C184T17WK19A	80	575	3.1	89.5	1.15	14.47	S, MX
5	1800	184TC	**132265.00**	√	C182T17WK17A	84	575	5.1	89.5	1.15	14.97	S, MX

Green items are premium efficient.

D - Item to be discontinued once inventory is depleted.

♥ Note listing on inside back flap.
Specifications are subject to change without notice.

NEMA is a trademark of National Electrical Manufacturers Association and is not owned or controlled by Regal Beloit Corporation.

Washguard® Motors

Washdown Duty Brakemotors
White Epoxy Painted

Washguard Coupler Brakes

Solid die-cast aluminum Stearns®* NEMA® 4X coupler brake converts any TEFC or TENV 56C thru 215TC motor to a fail-safe brakemotor by mounting between the C-face motor and driven equipment. Food safe white epoxy finish. BISSC Certified. Adds 5" to the overall length of 56C thru 145TC WASHGUARD TEFC or TENV motors. Includes all mounting components.

For Both Single and Three Phase Motors

Cat. No. 115/230V Single Phase	Cat. No. 208-230/460V Three Phase	Cat. No. 575V Three Phase	Brake Rating (ft-lbs)	Max HP @ 1725 RPM	Mounts to NEMA® Frame	Coupler Brake Output Shaft and Face	App. Wgt. (lbs)
175566.00	**175567.00**	**175568.00**	3	1	56C	5/8", 56C	13.0
175572.00	**175573.00**	**175574.00**	6	2	56C/143-5TC	5/8" or 7/8", 56C	14.0
175578.00	**175579.00**	**175580.00**	10	3	143-5TC	7/8", 143-5TC	15.0
—	**175582.00**	—	15	3	143-5TC	7/8", 143-5TC	16.0
—	**175584.00**	—	15	3	182-4TC	1 1/8", 182-4TC	58.0
—	**175586.00**	—	25	5	182-4TC	1 1/8", 182-4TC	58.0
—	**175588.00**	—	35	7-1/2	213-5TC	1 3/8", 213-5TC	60.0
—	**175590.00**	—	50	10	213-5TC	1 3/8", 213-5TC	62.0

Specifications are subject to change without notice.

Washguard Brakekits™ Kits

Kit of components including a Stearns®* NEMA 4X brake to convert 56 thru 145T frame stock TEFC only motors to fail-safe brakemotors. Food safe white epoxy finish. BISSC Certified. Adds 5 1/8" to the overall length of 56 thru 145T WASHGUARD TEFC motors.

For 208-230/460 Volts Three Phase and 230 Volts Single Phase Motors

Brake Rating (ft-lbs)	Mounts to NEMA Frame	Max. HP @ 1725rpm	Cat. No. 230/460V Brake Coil Voltage	(lbs)
3	56/143-5T	1	**175771.00***	24
6	56/143-5T	2	**175772.00***	36
10	56/143-5T	3	**175773.00***	43

For 575 Volts Three Phase Motors

Brake Rating (ft-lbs)	Mounts to NEMA Frame	Max. HP @ 1725rpm	Cat. No. 575V Brake Coil Voltage	(lbs)
3	56/143-5T	1	**175771-5***	24
6	56/143-5T	2	**175772-5***	36
10	56/143-5T	3	**175773-5***	43

*For 56/145 frame motors having a "B" for the suffix letter for the date code and having a face mount fan guard.

*Stearns is the trademark of Rexnord Industries and is not owned or controlled by Regal Beloit Corporation.

NEMA is a trademark of National Electrical Manufacturers Association and is not owned or controlled by Regal Beloit Corporation.

Washguard® Motors

DC Washdown Duty Motors
White Epoxy Painted

DC - SCR Rated 90 & 180 Volts - IP55 - C Face with Removable Base

HP	Full Load RPM	NEMA® Frame	Catalogue Number	Availability	Model Number	App. Wgt. (lbs)	Arm. Volts DC	Control Volts AC Input	F.L. Amps DC	"C" Dim. (Inches)	♥Notes
1/4	1750	S56C	**108423.00**	√	C4D17VK9C	23	90	115	2.7	10.69	S, US, 12
1/4	1750	SS56C	**098375.00**	C/A	C42D17VK1	21	180	230	1.4	10.22	S, US, 12
1/3	1750	S56C	**108424.00**	√	C4D17VK10	26	90	115	3.5	11.69	S, US, 12
1/3	1750	SS56C	**098376.00**	C/A	C42D17VK2	22	180	230	1.7	10.22	S, US, 12
1/2	1750	S56C	**108226.00**	√	C4D17VK1	38	90	115	4.9	13.13	S, US, 12
1/2	1750	S56C	**108227.00**	√	C4D17VK2	43	180	230	2.4	13.69	S, US, 12
3/4	1750	S56C	**108228.00**	√	C4D17VK3	53	90	115	7.0	14.63	S, US, 12
3/4	1750	S56C	**108229.00**	√	C4D17VK4	50	180	230	3.5	14.13	S, US, 12
1	1750	S56C	**108230.00**	√	C4D17WK1	45	90	115	10.0	14.82	S, US, 13
1	1750	S56C	**108231.00**	√	C4D17WK2	42	180	230	5.0	14.81	S, US, 13
1 1/2	1750	S56C	**108232.00**	√	C4D17WK3	50	180	230	7.6	16.82	S, US, 13

C/A - Check Availability.
Note 12: TENV
Note 13: TEFC

♥ Note listing on inside back flap.
Specifications are subject to change without notice.

Washguard - DC - IEC Frame

180 Volts - TENV IP55 - B5 Flange With Removable B3 Base

HP/ kW	Full Load RPM	IEC Frame	Catalogue Number	Availability	Model Number	App. Wgt. (lbs)	Arm. Volts DC	Control Volts AC Input	F.L. Amps DC	"C" Dim. (Inches)	♥Notes
1/2 - .37	1750	71	**098040.00**	C/A	CI42D17VD1	22	180	230	2.5	10.69	S, US
3/4 - .55	1750	80	**108407.00**	D	CI4D17VD1	52	180	230	3.5	16.02	S, US

D - Item to be discontinued once inventory is depleted.
C/A - Check Availability.

♥ Note listing on inside back flap.
Specifications are subject to change without notice.

If base is removed, do not reinstall bolts without using washers to compensate for the thickness of base. These WASHGUARD motors are modular design but stocked with B5 flange and B3 foot. The foot is removable. The B5 flange can be replaced with a B14 face or other diameter B5 flanges.
All Wash Down Duty® motors have Class F insulation.

NEMA is a trademark of National Electrical Manufacturers Association and is not owned or controlled by Regal Beloit Corporation.

Washguard® Motors

SUB-FHP IP55 Washguard Motors
White Epoxy Painted

General Specifications:

Precision subfractional horsepower DC permanent magnet motors. Designed for use with fullwave nonfiltered SCR controls or battery supplied low voltage for adjustable speed applications requiring constant torque throughout the speed range.

Features:

- 303 Stainless steel shaft resists corrosion
- Lubricated spring loaded contact seals prevent moisture from entering the motor
- Double sealed, oversized bearings with high temperature lubricant
- Exterior and interior components protected against moisture, acids, alkalies and oil
- Cast conduit box for superior sealing includes:
  - Threaded conduit entrance
  - Drain holes
  - Nitrile gaskets
  - 304 stainless steel conduit box cover
  - Stainless steel hardware
- USDA Approved white epoxy finish
- Nylon seals at bolt heads for superior sealing
- O-ring sealed brush covers

90 Volts DC - TENV - Square Flange Or C Face Less Base

HP	Full Load RPM	NEMA® Frame	Catalogue Number	Availability	Model Number	App. Wgt. (lbs)	Arm. Volts DC	Control Volts AC Input	F.L. Amps DC	"C" Dim. (Inches)	♥Notes
1/8	1800	31S	**M1120181.00**	√	CM31D17VZ1	11	90	115	1.5	8.57	S, US
1/6	1800	31S	**M1120183.00**	√	CM31D17VZ3	11	90	115	1.9	10.07	S, US
1/4	3600	32	**M1120185.00**	√	CM32D25VC1	13	90	115	1.9	10.00	S, US

Note: 32 Frame is C Face
31S Frame is square flange

♥ Note listing on inside back flap.
Specifications are subject to change without notice.

Low Voltage - 12 Volt - TENV - Square Flange or C Face Less Base

HP	Full Load RPM	NEMA Frame	Catalogue Number	Availability	Model Number	App. Wgt. (lbs)	Arm. Volts DC	F.L. Amps DC	"C" Dim. (Inches)	♥Notes
1/8	1800	31S	**M1120182.00**	√	CM31D17VZ2	7	12	10.5	8.1	S, US
1/6	1800	31S	**M1120184.00**	√	CM31D17VZ4	11	12	14.5	9.6	S, US
1/4	3600	32	**M1120186.00**	√	CM32D25VC2	13	12	20.0	9.5	S, US

Note: 32 Frame is C Face
31S Frame is square flange

♥ Note listing on inside back flap.
Specifications are subject to change without notice.

NEMA is a trademark of National Electrical Manufacturers Association and is not owned or controlled by Regal Beloit Corporation.

LEESON®

Chemical Resistance Comparison

Chemical Name	% Concentration	Exposure	White Epoxy	Stainless Steel
Fresh Water	100	Continuous	Excellent	Excellent
Salt Water	5	Continuous	Excellent	Excellent
Salt Brine	Dilute	Continuous	Fair	Good
Ammonium Hydroxide	Dilute	Continuous	Good	Excellent
Calcium Hydroxide (Lime)	100	Intermittent	Good	Excellent
Citric Acid	10	Continuous	Good	Excellent
Ethylene Glycol	100	Continuous	Excellent	Excellent
Hydrochloric Acid	37	Intermittent	Good	Poor
Lactic Acid	Dilute	Intermittent	Excellent	Excellent
Lactic Acid	100	Intermittent	Fair	Fair
Mineral Spirits	100	Continuous	Excellent	Excellent
Potassium Hydroxide	50	Intermittent	Fair	Fair
Sodium Hydroxide	5	Continuous	Fair	Excellent
Sodium Hydroxide	20	Continuous	Fair	Excellent
Sodium Hydroxide	50	Continuous	Excellent	Excellent
Sodium Hypochlorite (Bleach)	15	Intermittent	Excellent	Excellent
Sulfuric Acid	10	Intermittent	Fair	Fair
Toluene	100	Continuous	Fair	Fair
Animal Fats	NA	Continuous	Excellent	Excellent
Mineral Oils	NA	Continuous	Excellent	Excellent
Vegetable Oils	NA	Continuous	Excellent	Excellent
Cutting Oils	NA	Continuous	Excellent	Excellent
Detergents	NA	Continuous	Excellent	Excellent
Gasoline	NA	Continuous	Fair	Fair
Hydraulic Fluid	NA	Continuous	Excellent	Excellent
Lubricating Oils	NA	Continuous	Excellent	Excellent
General Weathering	NA	Continuous	Fair	Excellent
Mold/Mildew	NA	Continuous	Excellent	Excellent
Light Abrasion	NA	Continuous	Excellent	Excellent
Heavy Abrasion	NA	Continuous	Fair	Excellent

Washguard® Motors

IP55 Washguard Gearmotors - Parallel Shaft White Epoxy Painted

General Specifications - SCR Rated Gearmotors:

- Performance matched for continuous duty service over 60:1 speed range
- Constant torque throughout the speed range when powered by a full-wave unfiltered SCR-type adjustable speed control having a typical form factor of 1.3 to 1.4

General Specifications - Low Voltage Gearmotors:

- Performance matched for continuous duty service
- Designed for battery power or can be used with a low voltage controller with form factor up to 1.05

Features:

- Gearbox output shafts are coated with Microlon®* 3300 fortified Teflon®* for superior corrosion resistance
- Frame, endshields, armature and interior components protected by enamel and polyester compounds for resistance to moisture, acids, alkalies and oil
- Precision machined in-line steel gears
- First stage steel helical gear followed by spur-type gears
- Lubrication is permanent semi-fluid grease, reducing possibility of leakage
- Output shafts have needle bearings for high load capacities
- Gearbox shafts are hardened steel
- Cast conduit box with threaded conduit holes and nitrile gaskets keep water out
- Conduit box cover is made from 304 stainless steel
- For any condensation that may accumulate inside the motor, a one-way stainless steel vapor vent is provided
- All hardware is stainless steel
- Painted with white epoxy for superior corrosion resistance and protection
- Machined fits between the endbells and motor frame are sealed with gaskets
- Thru-bolt heads and nuts sealed with fiber washers
- O-rings under each threaded brush cover

Application Notes:

- Extended life in wet, high humidity applications
- Design repels water from entering motor
- Internal components protected against rust and corrosion
- These gearmotors are designed for mounting at any angle, but motor below the reducer should be avoided to prevent leakage of lubricant into the motor should the motor shaft seal fail
- Overhung load capacities shown are at center of output shaft
- Motor's stall torque could exceed recommended full load torques. A current limiting device such as an SCR control should be used to prevent damage. This issue is even more critical for low voltage motors, typically no controller is used since motor is connected directly to a battery, so some type of current limit or fusing should be considered.
- USDA approved white epoxy finish
- **Bison®*/Dayton®* direct interchange**

*Microlon is believed to be trademark or trade name of Micro Surface Corporation and is not owned or controlled by Regal Beloit Corporation.

*Teflon is believed to be a trademark or trade name of The Chemours Company and is not owned or controlled by Regal Beloit Corporation.

*Bison is believed to be the trademark or trade name of Bison Gear & Engineering and is not owned or controlled by Regal Beloit Corporation.

*Dayton is a trademark or trade name of Dayton Electric Manufacturing and is not owned or controlled by Regal Beloit Corporation.

Washguard® Motors

IP55 Washguard Gearmotors - Parallel Shaft
White Epoxy Painted

P300 Series - SCR RATED - 90 Volts - Parallel Shaft - TENV - 1.0 Service Factor

Output RPM	F.L. Torque (Lb.In.)	Input HP	Catalogue Number	Availability	Model Number	Gearmotor Type & Frame	Ratio to 1	DC Arm. Volts	Full Load Amps DC	Over-hung Load (Lbs.)
5	353	1/20	**M1125261.00**	√	CM31D17VZ5	P303-31	336	90	0.8	565
31	220	1/8	**M1125262.00**	√	CM31D17VZ6	P303-31	58	90	1.6	327
51	130	1/8	**M1125263.00**	√	CM31D17VZ7	P302-31	35	90	1.6	277
94	77	1/8	**M1125264.00**	√	CM31D17VZ8	P302-31	19	90	1.6	236
167	43	1/8	**M1125265.00**	√	CM31D17VZ9	P302-31	11	90	1.6	197

Specifications are subject to change without notice.

P	PB	X Inches	XL	XH
3.13	3.8	3.54	10.44	8.94
3.13	3.8	3.54	11.94.	10.44
3.13	3.8	3.54	11.94	10.44
3.13	3.8	3.54	11.94	10.44
3.13	3.8	3.54	11.94	10.44

Specifications are subject to change without notice.

P300 Series - Low Voltage (12 Volts) - Parallel Shaft - TENV - 1.0 Service Factor

Output RPM	F.L Torque (Lb.In.)	Input HP	Catalogue Number	Availability	Model Number	Gearmotor Type & Frame	Ratio to 1	DC Arm. Volts	Full Load Amps DC	Over-hung Load (Lbs.)
5	353	1/20	**M1125266.00**	√	CM31D17VZ10	P303-31	336	12	6.4	565
31	220	1/8	**M1125267.00**	√	CM31D17VZ11	P303-31	58	12	11.0	327

Specifications are subject to change without notice.

P	PB	X Inches	XL	XH
3.13	3.8	3.54	10.44	8.94
3.13	4.43	3.54	10.44	8.94

Specifications are subject to change without notice.

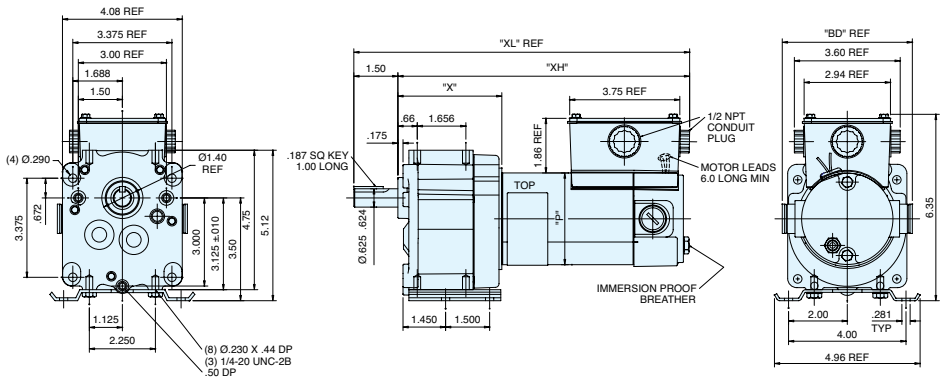

Washguard® Motors

IP55 Washguard Gearmotors - Parallel Shaft White Epoxy Painted

General Specifications - SCR Rated Gearmotors:

- Performance matched for continuous duty service over 60:1 speed range
- Constant torque throughout the speed range when powered by a full-wave unfiltered SCR-type adjustable speed control having a typical form factor of 1.3 to 1.4

General Specifications - Low Voltage Gearmotors:

- Performance matched for continuous duty service
- Designed for battery power or can be used with a low voltage controller with form factor up to 1.05

Features:

- Gearbox output shafts are coated with Microlon®* 3300 fortified Teflon®* for superior corrosion resistance
- Frame, endshields, armature and interior components protected by enamel and polyester compounds for resistance to moisture, acids, alkalies and oil
- Precision machined in-line steel gears
- First stage steel helical gear followed by spur-type gears
- Lubrication is permanent semi-fluid grease, reducing possibility of leakage
- Output shafts have needle bearings for high load capacities
- Gearbox shafts are hardened steel
- Cast conduit box with threaded conduit holes and nitrile gaskets keep water out
- Conduit box cover is made from 304 stainless steel
- For any condensation that may accumulate inside the motor, a one-way stainless steel vapor vent is provided
- All hardware is stainless steel
- Painted with white epoxy for superior corrosion resistance and protection
- Machined fits between the endbells and motor frame are sealed with gaskets
- Thru-bolt heads and nuts sealed with fiber washers
- O-rings under each threaded brush cover

Application Notes:

- Extended life in wet, high humidity applications
- Design repels water from entering motor
- Internal components protected against rust and corrosion
- These gearmotors are designed for mounting at any angle, but motor below the reducer should be avoided to prevent leakage of lubricant into the motor should the motor shaft seal fail
- Overhung load capacities shown are at center of output shaft
- Motor's stall torque could exceed recommended full load torques. A current limiting device such as an SCR control should be used to prevent damage. This issue is even more critical for low voltage motors, typically no controller is used since motor is connected directly to a battery, so some type of current limit or fusing should be considered.
- USDA approved white epoxy finish
- **Bodine®*/Baldor®* direct interchange**

*Microlon is believed to be trademark or trade name of Micro Surface Corporation and is not owned or controlled by Regal Beloit Corporation.

*Teflon is believed to be a trademark or trade name of The Chemours Company and is not owned or controlled by Regal Beloit Corporation.

*Baldor is believed to be a trademark or trade name of ABB ASEA Brown Boveri and is not owned or controlled by Regal Beloit Corporation.

*Bodine is believed to be a trademark or trade name of Bodine Electric and is not owned or controlled by Regal Beloit Corporation.

Washguard® Motors

IP55 Washguard Gearmotors - Parallel Shaft
White Epoxy Painted

PE350 Series Parallel Shaft - TENV - 1.0 Service Factor - SCR Rated 90 Volts

Output RPM	F.L. Torque (Lb.In.)	Input HP	Catalogue Number	Availability	Model Number	Gearmotor Type & Frame	Ratio to 1	DC Arm. Volts	Full Load Amps DC	Over-hung Load (Lbs.)
14	341	1/8	**M1125268.00**	√	CM31D25VZ1	P353-31	180	90	1.5	465
42	280	1/4	**M1125269.00**	√	CM32D25VZ1	P353-32	58	90	2.6	327
83	155	1/4	**M1125270.00**	√	CM32D25VZ2	P353-32	29	90	2.6	267
250	45	1/4	**M1125271.00**	√	CM32D25VZ3	P352-32	10	90	2.6	201
500	25	1/4	**M1125272.00**	√	CM32D25VZ4	P352-32	5	90	2.6	194

Specifications are subject to change without notice.

P	PB	X Inches	XL	XH
3.13	3.8	3.45	11.84	9.84
3.25	3.8	3.45	13.84	11.84
3.25	3.8	3.45	13.84	11.84
3.25	3.8	3.45	13.84	11.84
3.25	3.8	3.45	13.84	11.84

Specifications are subject to change without notice.

PE350 Series Parallel Shaft - TENV - 1.0 Service Factor - Low Voltage 12 Volts

Output RPM	F.L Torque (Lb.In.)	Input HP	Catalogue Number	Availability	Model Number	Gearmotor Type & Frame	Ratio to 1	DC Arm. Volts	Full Load Amps DC	Over-hung Load (Lbs.)
14	341	1/8	**M1125273.00**	√	CM31D25VZ2	P353-31	180	12	12.0	465
42	325	1/4	**M1125274.00**	√	CM32D25VZ5	P353-32	58	12	20.0	327

Specifications are subject to change without notice.

P	PB	X Inches	XL	XH
3.13	4.43	3.45	11.58	9.58
3.25	4.43	3.45	11.58	11.84

Specifications are subject to change without notice.

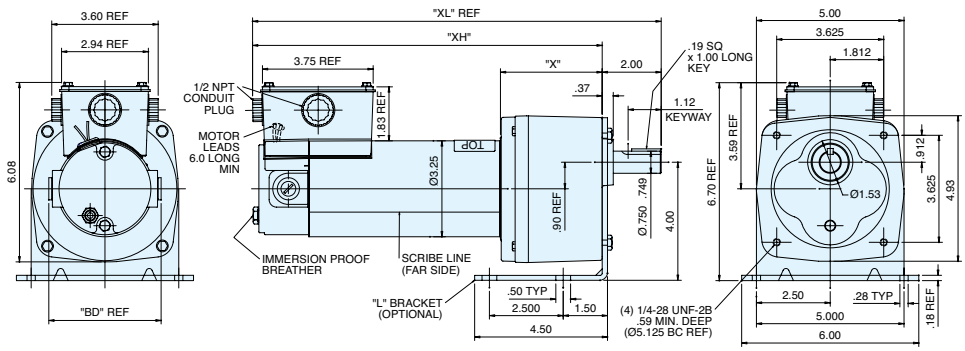

Washguard® Motors

IP55 Washguard Right Angle Gearmotors
White Epoxy Painted

General Specifications - SCR Rated Gearmotors:

- Performance matched for continuous duty service over 60:1 speed range
- Constant torque throughout the speed range when powered by a full-wave unfiltered SCR-type adjustable speed control having a typical form factor of 1.3 to 1.4

General Specifications - Low Voltage Gearmotors:

- Performance matched for continuous duty service
- Designed for battery power or can be used with a low voltage controller with form factor up to 1.05

Features:

- 303 stainless steel gearbox output shaft
- Frame, endshields, armature and interior components protected by enamel and polyester compounds for resistance to moisture, acids, alkalies and oil
- Cast conduit box with threaded conduit holes and nitrile gaskets keep water out
- Conduit box cover is made from 304 stainless steel
- For any condensation that may accumulate inside the motor, a one-way stainless steel vapor vent is provided
- All hardware is stainless steel
- Painted with white epoxy for superior corrosion resistance and protection
- Machined fits between the endbells and motor frame are sealed with gaskets
- Thru-bolt heads and nuts sealed with fiber washers
- O-rings under each threaded brush cover
- Worm-type right-angle gearing features hardened, steel worm with bronze worm wheel for long life and quiet operation
- Precision machined aluminum gear housing
- Lubrication is permanent with an oil bath
- Gearbox has all ball bearings
- Output shaft is field interchangeable from left hand to right hand style by reassembly
- Double output shaft available as a factory option

Application Notes :

- These right-angle gearmotors have a lubrication breather positioned for horizontal mounting. For other mountings, the breather plug must be reoriented by using a 90 deg 1/8" NPT taper pipe elbow (See drawing). This elbow is not offered as a LEESON® motor accessory.
- These gearmotors are designed for mounting at any angle, but motor below the reducer should be avoided to prevent leakage of lubricant into the motor should the motor shaft seal fail
- Overhung load capacities shown are at center of output shaft

Washguard® Motors

IP55 Washguard Right Angle Gearmotors
White Epoxy Painted

TENV - 1.0 Service Factor - SCR Rated - 90 Volts

Output RPM	F.L. Torque (Lb.In.)	Input HP	Catalogue Number	Availability	Model Number	Gearmotor Type & Frame	Ratio to 1	DC Arm. Volts	Full Load Amps DC	Over-hung Load (Lbs.)
42	80	1/8	**M1125275.00**	√	CM31D25VZ3	13F60-31	60	90	2.2	235
250	25	1/8	**M1125276.00**	√	CM31D25VZ4	13F10-31	10	90	2.2	235
62	135	1/4	**M1125277.00**	√	CM32D25VZ6	13F40-32	40	90	3.7	235
125	90	1/4	**M1125278.00**	√	CM32D25VZ7	13F20-32	20	90	3.7	235
250	50	1/4	**M1125279.00**	√	CM32D25VZ8	13F10-32	10	90	3.7	235

Specifications are subject to change without notice.

P	PB	X Inches	XL	XH
3.13	3.8	4.5	10.86	6.36
3.13	3.8	4.5	10.86	6.36
3.25	3.8	4.5	12.86	8.36
3.25	3.8	4.5	12.86	8.36
3.25	3.8	4.5	12.86	8.36

Specifications are subject to change without notice.

TENV - 1.0 Service Factor - Low Voltage - 12 Volts

Output RPM	F.L. Torque (Lb.In.)	Input HP	Catalogue Number	Availability	Model Number	Gearmotor Type & Frame	Ratio to 1	DC Arm. Volts	Full Load Amps DC	Over-hung Load (Lbs.)
62	135	1/4	**M1125280.00**	√	CM32D25VZ9	13F40-32	40	12	28.0	235
125	90	1/4	**M1125281.00**	√	CM32D25VZ10	13F20-32	20	12	28.0	235

Specifications are subject to change without notice.

P	PB	X Inches	XL	XH
3.25	4.43	4.5	12.36	7.86
3.25	4.43	4.5	12.36	7.86

Specifications are subject to change without notice.

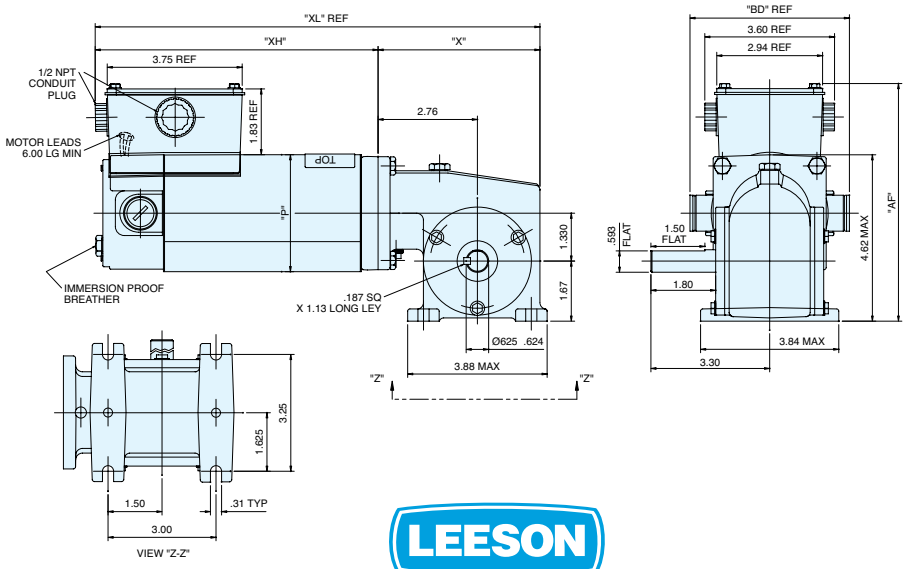

Washguard® Motors

IP55 AC Washguard Gearmotors
Parallel Shaft - White Epoxy Painted

Features:

- Single phase PSC designs include capacitor inside conduit box
- These gearmotors are designed for mounting at any angle, but motor below the reducer should be avoided to prevent leakage of lubricant into the motor should the motor shaft seal fail
- Shaft material coated with teflon/ceramic plating
- White epoxy painted motors
- O-rings and gaskets used for sealing
- Hardened worm-type gearing used
- Interior components protected against corrosion
- Ball bearings used in gear housing
- Sealed output shafts
- UL listed and CSA certified
- **Bison®*/Dayton®* direct interchange**

P240 series AC Washdown Duty Gearmotors

Output RPM	F.L. Torque (Lb.In.)	Input HP	Catalogue Number	Availability	Model Number	Gearmotor Type & Frame	Ratio to 1	Voltage	Phase	F.L. Amps @ 230 V	Over-hung Load (Lbs.)
16	391	5/32	**M1145138.00**	√	CM38P17FZ39	P240	103	115/230	1	1.05	399
40	219	5/32	**M1145139.00**	√	CM38P17FZ40	P240	43	115/230	1	1.00	303
156	60	5/32	**M1145140.00**	√	CM38P17FZ41	P240	10.6	115/230	1	1.00	201
16	391	1/6	**M1145144.00**	√	CM38T17FZ20	P240	103	230	3	0.72	237
30	295	1/6	**M1145145.00**	√	CM38T17FZ21	P240	58	230	3	0.72	237

Specifications are subject to change without notice.

*Bison is believed to be the trademark or trade name of Bison Gear & Engineering and is not owned or controlled by Regal Beloit Corporation.

*Dayton is believed to be the trademark or trade name of Dayton Electric Manufacturing and is not owned or controlled by Regal Beloit Corporation.

Features:

- Single phase PSC designs include capacitor inside conduit box
- These gearmotors are designed for mounting at any angle, but motor below the reducer should be avoided to prevent leakage of lubricant into the motor should the motor shaft seal fail
- Shaft material coated with teflon/ceramic plating
- White epoxy painted motors
- O-rings and gaskets used for sealing
- Hardened worm-type gearing used
- Interior components protected against corrosion
- Ball bearings used in gear housing
- Sealed output shafts
- Output shafts have needle bearings for high load capacities
- UL listed and CSA certified

Right Angle Series AC Washdown Duty Gearmotors

Output RPM	F.L. Torque (Lb.In.)	Input HP	Catalogue Number	Availability	Model Number	Gearmotor Type & Frame	Ratio to 1	Voltage	Phase	F.L. Amps @ 230 V	Over-hung Load (Lbs.)
43	113	1/6	**M1145141.00**	√	CM38P17FZ42	Right-Angle	40	115/230	1	1.0	235
83	75	1/6	**M1145142.00**	√	CM38P17FZ43	Right-Angle	20	115/230	1	1.0	235
340	23	1/6	**M1145143.00**	√	CM38P17FZ44	Right-Angle	5	115/230	1	1.4	235
29	220	1/6	**M1145146.00**	√	CM38T17FZ22	Right-Angle	60	230	3	1.3	235
172	105	1/6	**M1145147.00**	√	CM38T17FZ23	Right-Angle	10	230	3	1.3	235

Specifications are subject to change without notice.

Washguard® Motors

SST - All Stainless Motors

SST StainlessDuck

The LEESON® family of tough duck motors is designed for long life in demanding washdown applications. LEESON FHP Washguard SST all-stainless motors are Stainless Steel Tough!

Built with all stainless steel external components to prevent corrosion and well sealed against moisture and condensation to protect internal components, the Washguard SST all-stainless steel motors are able to withstand the severe washdown environments found in the food processing, chemical processing, and beverage industries.

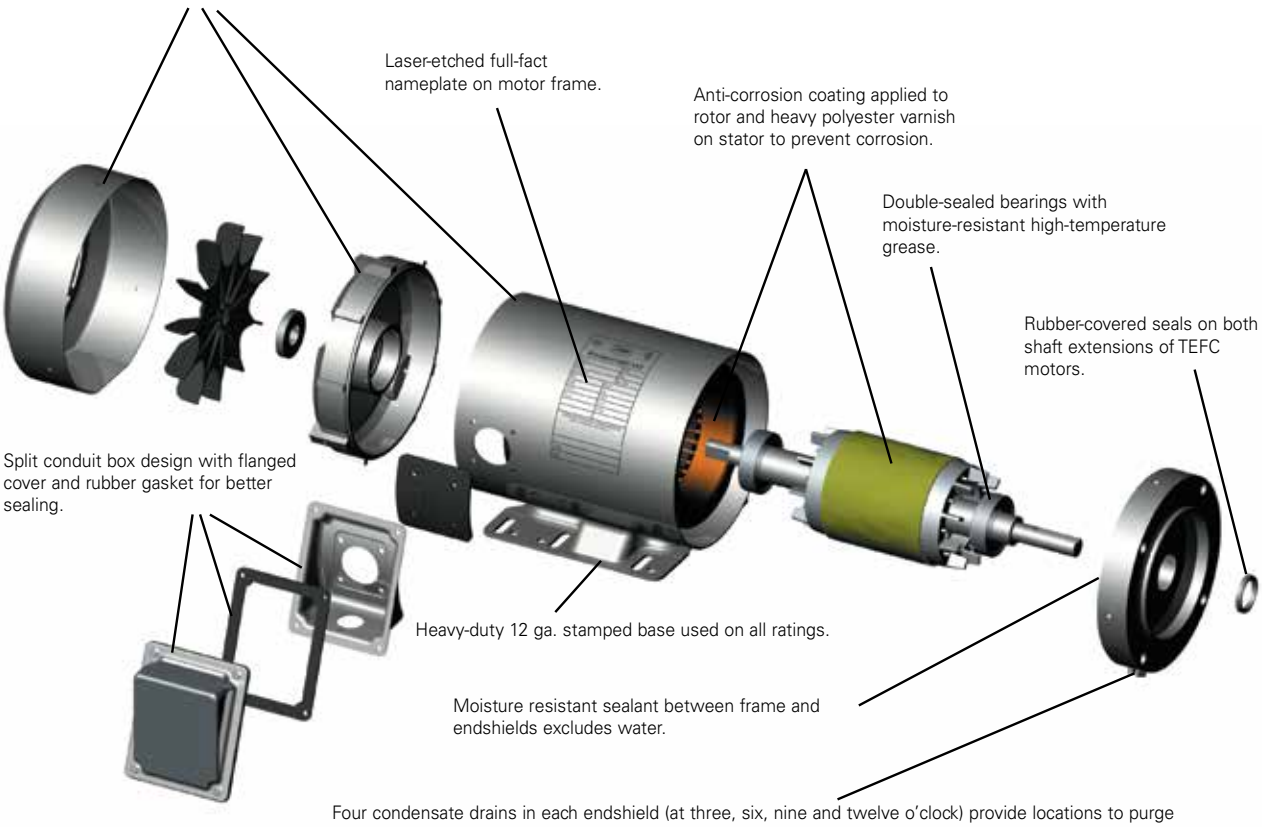

Washguard® Motors
SST - All Stainless Motors

Single-Phase - TEFC - C Face With Base

HP	SYN RPM 60 Hz	NEMA® Frame	Catalogue Number	Availability	Model Number	App. Wgt. (lbs)	Voltage	F. L. Amps @ 230 V	Service Factor	"C" Dim. (Inches)	♥Notes
1/2	3600	56C	**191474.00**	√	C6C34WK18	29.5	115/208-230	3.1	1.15	11.10	S, CN
1/2	1800	56C	**191475.00**	√	C6C17WK14	31.5	115/208-230	4.1	1.15	11.10	S, CN
3/4	3600	56C	**191476.00**	√	C6C34WK19	31.5	115/208-230	4.5	1.15	11.80	S, CN
3/4	1800	56C	**191477.00**	√	C6C17WK15	39.0	115/208-230	4.9	1.15	11.80	S, CN
1	3600	56C	**191478.00**	√	C6C34WK20	39.0	115/208-230	6.2	1.15	12.30	S, CN
1	1800	56C	**191479.00**	√	C6C17WK16	42.5	115/208-230	6.8	1.15	12.30	S, CN
1 1/2	3600	56C	**191480.00**	√	C6K34WK2	42.5	115/208-230	8.8	1.15	13.20	S, CN
1 1/2	1800	56HC	**191481.00**	√	C6K17WK1	52.5	115/208-230	7.9	1.15	13.20	S, CN
2	3600	145TC	**191482.00**	√	C145K34WK2	64.5	115/208-230	9.5	1.15	14.20	S, CN
2	1800	145TC	**191483.00**	√	C145K17WK3	64.5	115/208-230	8.2	1.15	14.20	S, CN

♥ Note listing on inside back flap.
Specifications are subject to change without notice.

Stainless Steel Pedestal Fan Motors

- Extended Thru-bolts
- Auto Reset Protectors
- TEAO Designs

Single-Phase - PSC Type - TEAO - 115/230 Volts - Yoke Mount

HP	SYN RPM 60 Hz	NEMA Frame	Catalogue Number	Availability	Model Number	App. Wgt. (lbs)	Voltage	F. L. Amps @ 230 V	Service Factor	"C" Dim. (Inches)	Shaft Dia.	♥Notes
1/4	1725	48YZ	**191543.00**	√	A4P17VZ1A	17.6	115/230	1.3	1.0	11.58	.50	S, CN
1/4	1140	48YZ	**191544.00**	√	A6P11VZ1A	18.7	115/230	1.5	1.0	11.58	.50	S, CN
1/3	1725	48YZ	**191545.00**	√	A4P17VZ2A	18.5	115/230	1.5	1.0	11.58	.50	S, CN
1/3	1140	48YZ	**191546.00**	√	A6P11VZ2A	21.6	115/230	2.0	1.0	11.58	.50	S, CN
1/2	1725	48YZ	**191547.00**	√	A4P17VZ3A	21.2	115/230	2.6	1.0	11.58	.50	S, CN
1/2	1140	48YZ	**191548.00**	√	A6P11VZ3A	26.4	115/230	2.7	1.0	12.56	.50	S, CN

♥ Note listing on inside back flap.
Specifications are subject to change without notice.

NEMA is a trademark of National Electrical Manufacturers Association and is not owned or controlled by Regal Beloit Corporation.

Washguard® Motors

SST - All Stainless Motors

NEW!

Now up to 30HP!
Call for availability.

Three-Phase - TENV/TEFC - C Face With Base - 230/460 Volts

HP	SYN RPM 60 Hz	NEMA® Frame	Catalogue Number	Availability	Model Number	App. Wgt. (lbs)	Voltage	F. L. Amps @ 230 V	% F.L. Eff.	Service Factor	"C" Dim. (Inches)	♥Notes
1/3	3600	56C	**191200.00**	√	C6T34NK26A	29	230/460	1.0	74.0	1.15	9.78	S, CN, 12
1/3	3600	56C	**191535.00**	D	————	34	230/460	0.49	72.0	1.15	10.70	S, CN, 13
1/3	1800	56C	**191201.00**	√	C6T17NK29A	30	230/460	1.3	78.5	1.15	9.78	S, CN, 12
1/3	1800	56C	**191529.00**	D	————	35	230/460	0.53	75.0	1.15	11.20	S, CN, 13
1/2	3600	56C	**191203.00**	√	C6T34NK27A	32	230/460	1.5	77.0	1.15	9.78	S, CN, 12
1/2	3600	56C	**191501.00**	D	————	37	230/460	0.68	76.0	1.15	10.70	S, CN, 13
1/2	1800	56C	**191204.00**	√	C6T17NK30A	33	230/460	1.6	81.5	1.15	9.78	S, CN, 12
1/2	1800	56C	**191530.00**	D	————	38	230/460	0.81	78.0	1.15	11.20	S, CN, 13
3/4	3600	56C	**191206.00**	√	C6T34NK28A	33	230/460	2.0	78.5	1.15	9.78	S, CN, 12
3/4	3600	56C	**191502.00**	D	————	40	230/460	0.96	79.0	1.15	10.70	S, CN, 13
3/4	1800	56C	**191207.00**	√	C6T17NK31A	38	230/460	2.3	82.5	1.15	9.78	S, CN, 12
3/4	1800	56C	**191531.00**	D	————	43	230/460	1.1	80.0	1.15	11.20	S, CN, 13
1	3600	56C	**191209.00**	√	C6T34FK85A	41	230/460	2.6	80.0	1.15	13.77	S, CN, 13
1	3600	143TC	**191486.00**	√	C143T34WK10A	42	230/460	2.6	80.0	1.15	13.62	S, CN, 13
1	1800	56C	**191291.00**	D	C6T17NK38A	49	230/460	3.0	81.0	1.15	11.00	S, CN, 12
1	1800	56HC	**191211.00**	D	C6T17FK81A	47	230/460	3.0	82.5	1.15	13.77	S, CN, 6, 13
1	1800	56HC	**191558.00**	√	C6T17WK41A	48	230/460	3.0	85.5	1.15	13.77	S, CN, 6, 13
1	1800	143TC	**191487.00**	√	C143T17WK14A	48	230/460	3.0	85.5	1.15	13.62	S, CN, 13
1 1/2	3600	56HC	**191215.00**	D	C6T34FK86A	48	230/460	3.8	82.5	1.15	13.77	S, CN, 6, 13
1 1/2	3600	56HC	**191560.00**	√	C6T34WK23A	48	230/460	3.8	84.0	1.15	13.77	S, CN, 6, 13
1 1/2	3600	143TC	**191488.00**	√	C143T34WK12A	49	230/460	3.8	84.0	1.15	13.62	S, CN, 6, 13
1 1/2	1800	56HC	**191217.00**	D	C6T17FK82A	48	230/460	4.8	84.0	1.15	13.77	S, CN, 6, 13
1 1/2	1800	56HC	**191561.00**	√	C6T17WK43	48	230/460	4.8	86.5	1.15	13.77	S, CN, 6, 13
1 1/2	1800	145TC	**191489.00**	√	C145T17WK35 A	49	230/460	4.8	86.5	1.15	13.62	S, CN, 6, 13
2	3600	56HC	**191221.00**	D	C6T34FK87A	49	230/460	5.0	84.0	1.15	13.77	S, CN, 6, 13
2	3600	56HC	**191562.00**	√	C6T34WK37A	49	230/460	5.0	85.5	1.15	13.77	S, CN, 6, 13
2	3600	145TC	**191490.00**	√	C145T34WK26A	50	230/460	5.0	85.5	1.15	13.62	S, CN, 13
2	1800	56HC	**191223.00**	D	C6T17FK83A	52	230/460	5.8	84.0	1.15	13.77	S, CN, 6, 13
2	1800	56HC	**191563.00**	√	C6T17WK42A	53	230/460	5.8	86.5	1.15	13.77	S, CN, 6, 13
2	1800	145TC	**191491.00**	√	C145T17WK37A	53	230/460	5.8	86.5	1.15	13.62	S, CN, 13
3	3600	145TC	**191492.00**	√	C145T34WK21A	62	230/460	7.4	86.5	1.15	14.12	S, CN, 13
3	3600	182TC	**194000.00**	√	C182T34WK2	80	230/460	6.9	86.5	1.15	16.97	S, CN, 13
3	1800	182TC	**194001.00**	√	C182T17WK21	95	230/460	7.2	89.5	1.15	16.97	S, CN, 13
5	3600	184TC	**194002.00**	√	C184T34WK21	100	230/460	11.0	88.5	1.15	18.14	S, CN, 13
5	1800	184TC	**194003.00**	√	C184T17WK25	109	230/460	12.4	89.5	1.15	18.14	S, CN, 13
7 1/2	3600	213TC	**194004.00**	√	C213T34WK9	131	230/460	17.4	89.5	1.15	21.57	S, CN, 13
7 1/2	1800	213TC	**194005.00**	√	C213T17WK19	160	230/460	19.4	91.7	1.15	21.57	S, CN, 13
10	3600	215TC	**194006.00**	√	C215T34WK16	151	230/460	22.8	90.2	1.15	21.57	S, CN, 13
10	1800	215TC	**194007.00**	√	C215T17WK19	182	230/460	25.2	91.7	1.15	21.57	S, CN, 13

Green items are premium efficient.

D - Item to be discontinued once inventory is depleted.
Note 12 - TENV
Note 13 - TEFC

Note: 230/460 Volt motors are suitable for use at 208 Volts 60HZ at 1.0 Service factor.

♥ Note listing on inside back flap.
Specifications are subject to change without notice.

NEMA is a trademark of National Electrical Manufacturers Association and is not owned or controlled by Regal Beloit Corporation.

LEESON®

Washguard® Motors
SST - All Stainless Motors

Three Phase - TENV/TEFC - C Face Less Base - 230/460 Volts

HP	SYN RPM 60 Hz	NEMA® Frame	Catalogue Number	Availability	Model Number	App. Wgt. (lbs)	Voltage	F. L. Amps @ 230 V	% F.L. Eff.	Service Factor	"C" Dim. (Inches)	♥Notes
1/3	1800	56C	**191202.00**	√	C6T17NC328A	29	230/460	1.3	78.5	1.15	9.78	S,CN,12
1/3	1800	56C	**191506.00**	D	————	29	230/460	.53	75.0	1.15	11.2	S,CN,13
1/2	1800	56C	**191205.00**	√	C6T17NC329A	32	230/460	1.6	81.5	1.15	9.78	S,CN,12
1/2	1800	56C	**191507.00**	√	C6T17WC39A	32	230/460	.81	78.0	1.15	11.2	S,CN,13
3/4	1800	56C	**191208.00**	√	C6T17NC298A	38	230/460	2.3	82.5	1.15	9.78	S,CN,12
3/4	1800	56C	**191508.00**	√	C6T17WC40A	38	230/460	1.1	80.0	1.15	11.2	S,CN,13
1	1800	56C	**191290.00**	√	C6T17NC310A	48	230/460	3.0	81.0	1.15	11.00	S,CN,12
1	1800	56C	**191213.00**	D	C6T17FC177A	46	230/460	3.0	82.5	1.15	13.77	S,CN,13
1	1800	56C	**191564.00**	√	C6T17WC46A	48	230/460	3.0	85.5	1.15	13.77	S,CN,13
1	1800	143TC	**191214.00**	D	C143T17FC28A	47	230/460	3.0	82.5	1.15	13.62	S,CN,13
1	1800	143TC	**191565.00**	√	C143T17WC9A	48	230/460	3.0	85.5	1.15	13.62	S,CN,13
1 1/2	1800	56C	**191219.00**	D	C6T17FC178A	47	230/460	4.8	84.0	1.15	13.77	S,CN,13
1 1/2	1800	56C	**191567.00**	√	C6T17WC48A	49	230/460	4.8	86.5	1.15	13.77	S,CN,13
1 1/2	1800	145TC	**191220.00**	D	C145T17FC79A	48	230/460	4.8	84.0	1.15	13.62	S,CN,13
1 1/2	1800	145TC	**191568.00**	√	C145T17WC39A	48	230/460	4.8	86.5	1.15	13.62	S,CN,13
2	1800	56C	**191225.00**	D	C6T17FC179A	51	230/460	5.8	84.0	1.15	13.77	S,CN,13
2	1800	56C	**191569.00**	√	C6T17WC47A	52	230/460	5.8	86.5	1.15	13.77	S,CN,13
2	1800	145TC	**191226.00**	D	C145T17FC80A	52	230/460	5.8	84.0	1.15	13.62	S,CN,13
2	1800	145TC	**191570.00**	√	C145T17WK59A	52	230/460	5.8	86.5	1.15	13.62	S,CN,13

Green items are premium efficient.

D - Item to be discontinued once inventory is depleted.
Note 12: TENV
Note 13: TEFC

Note: 230/460 Volt motors are suitable for use at 208 Volts 60HZ at 1.0 Service factor.

♥ Note listing on inside back flap.
Specifications are subject to change without notice.

NEMA is a trademark of National Electrical Manufacturers Association and is not owned or controlled by Regal Beloit Corporation.

Washguard® Motors

SST - All Stainless Motors

Three Phase - TENV/TEFC - C Face With Base - 575 Volts

HP	SYN RPM 60 Hz	NEMA® Frame	Catalogue Number	Availability	Model Number	App. Wgt. (lbs)	Voltage	F. L. Amps @ 575 V	% F.L. Eff.	Service Factor	"C" Dim. (Inches)	♥Notes
1/3	3600	56C	**191227.00**	√	C6T34NK29A	29	575	0.45	74.0	1.15	9.78	S, CN, 12
1/3	3600	56C	**191503.00**	D	C6T34WK20	34	575	0.42	72.0	1.15	10.70	S, CN, 13
1/3	1800	56C	**191228.00**	√	C6T17NK32A	30	575	0.52	78.5	1.15	9.78	S, CN, 12
1/3	1800	56C	**191532.00**	D	C6T17WK35	35	575	0.51	75.0	1.15	11.20	S, CN, 13
1/2	3600	56C	**191230.00**	√	C6T34NK30A	32	575	0.65	77.0	1.15	9.78	S, CN, 12
1/2	3600	56C	**191504.00**	D	C6T34WK21	37	575	0.81	76.0	1.15	10.70	S, CN, 13
1/2	1800	56C	**191231.00**	√	C6T17NK33A	33	575	0.65	81.5	1.15	9.78	S, CN, 12
1/2	1800	56C	**191533.00**	√	C6T17WK36	38	575	0.79	78.0	1.15	11.20	S, CN, 13
3/4	3600	56C	**191233.00**	√	C6T34NK31A	33	575	0.80	78.5	1.15	9.78	S, CN, 12
3/4	3600	56C	**191505.00**	D	C6T34WK22	40	575	1.1	79.0	1.15	10.70	S, CN, 13
3/4	1800	56C	**191234.00**	√	C6T17NK34A	38	575	0.95	82.5	1.15	9.78	S, CN, 12
3/4	1800	56C	**191534.00**	√	C6T17WK37	43	575	1.1	80.0	1.15	11.20	S, CN, 13
1	3600	56C	**191236.00**	√	C6T34FK88A	41	575	1.2	80.0	1.15	13.77	S, CN, 13
1	3600	143TC	**191237.00**	D	C143T34FK11A	42	575	1.2	80.0	1.15	13.62	S, CN, 13
1	3600	143TC	**191518.00**	√	C143T34WK13A	42	575	1.0	80.0	1.15	13.62	S, CN, 13
1	1800	56C	**191295.00**	D	C6T17NK39	47	575	1.2	82.5	1.15	11.00	S, CN, 12
1	1800	56C	**191238.00**	D	C6T17FK84A	47	575	1.2	82.5	1.15	13.77	S, CN, 13
1	1800	56C	**191600.00**	√	C6T17FK98A	48	575	1.2	85.5	1.15	13.77	S, CN, 6, 13
1	1800	143TC	**191239.00**	D	C143T17FK143A	48	575	1.2	82.5	1.15	13.62	S, CN, 6, 13
1	1800	143TC	**191519.00**	√	C6T17NK39	48	575	1.2	85.5	1.15	13.62	S, CN, 6, 13
11/2	3600	56C	**191242.00**	D	C6T34FK89A	48	575	1.7	82.5	1.15	13.77	S, CN, 6, 13
11/2	3600	56HC	**191601.00**	√	C6T34FK116A	48	575	1.5	84.0	1.15	13.77	S, CN, 6, 13
11/2	3600	143TC	**191243.00**	D	C143T34FK12A	49	575	1.7	82.5	1.15	13.62	S, CN, 6, 13
11/2	3600	143TC	**191520.00**	√	C143T34WK14A	49	575	1.5	84.0	1.15	13.62	S, CN, 6, 13
11/2	1800	56C	**191244.00**	D	C6T17FK85A	48	575	1.9	84.0	1.15	13.77	S, CN, 6, 14
11/2	1800	56HC	**191602.00**	√	C6T17FK99A		575	1.8	86.5	1.15	13.77	S, CN, 6, 13
11/2	1800	145TC	**191245.00**	D	C145T17FK46A	49	575	1.9	84.0	1.15	13.62	S, CN, 6, 13
11/2	1800	145TC	**191521.00**	√	C145T17WK47A	49	575	1.9	86.5	1.15	13.62	S, CN, 6, 13
2	3600	56C	**191248.00**	D	C6T34FK90A	49	575	2.2	84.0	1.15	13.77	S, CN, 6, 13
2	3600	56HC	**191603.00**	√	C6T34FK117FR	49	575	1.9	85.5	1.15	13.77	S, CN, 6, 13
2	3600	143TC	**191249.00**	D	C145T34FK31A	50	575	2.2	84.0	1.15	13.62	S, CN, 6, 13
2	3600	145TC	**191522.00**	√	C145T34WK32A	50	575	2.0	85.5	1.15	13.62	S, CN, 6, 13
2	1800	56C	**191250.00**	D	C6T17FK86A	52	575	2.3	84.0	1.15	13.77	S, CN, 6, 13
2	1800	56HC	**191604.00**	√	C6T17FK100A	53	575	2.2	86.5	1.15	13.77	S, CN, 6, 13
2	1800	145TC	**191251.00**	D	C145T17FK47A	53	575	2.3	84.0	1.15	13.62	S, CN, 6, 13
2	1800	145TC	**191523.00**	√	————	53	575	2.3	86.5	1.15	13.62	S, CN, 6, 13
3	3600	145TC	**191297.00**	D	————	62	575	3.0	85.0	1.15	14.12	S, CN, 6, 13
3	3600	145TC	**191524.00**	√	C145T34WK40A	62	575	3.0	86.5	1.15	14.12	S, CN, 6, 13
3	3600	182TC	**194102.00**	√	C182T34FK1A	87	575	2.80	86.5	1.15	16.97	S, CN, 13
3	1800	182TC	**194103.00**	√	C182T17FK1A	95	575	2.88	89.5	1.15	16.97	S, CN, 13
5	3600	184TC	**194104.00**	√	C184T34FK1A	100	575	4.4	88.5	1.15	18.14	S, CN, 13
5	1800	184TC	**194105.00**	√	C184T17FK1A	109	575	5.6	89.5	1.15	18.14	S, CN, 13
7.5	3600	213TC	**194288.00**	√	C213T34FK1A	131	575	7.00	89.5	1.15	21.57	S, CN, 13
7.5	1800	213TC	**194106.00**	√	C213T17FK1A	160	575	7.80	91.7	1.15	21.57	S, CN, 13
10	3600	215TC	**194107.00**	√	C215T34FK1A	151	575	9.1	90.2	1.15	21.57	S, CN, 13
10	1800	215TC	**194108.00**	√	C215T17FK1A	182	575	9.8	91.7	1.15	21.57	S, CN, 13

Green items are premium efficient.

D - Item to be discontinued once inventory is depleted.
Note 12: TENV
Note 13: TEFC

♥ Note listing on inside back flap.
Specifications are subject to change without notice.

NEMA is a trademark of National Electrical Manufacturers Association and is not owned or controlled by Regal Beloit Corporation.

LEESON®

Three Phase - TENV/TEFC - C Face Less Base - 575 Volts

HP	SYN RPM 60 Hz	NEMA® Frame	Catalogue Number	Availability	Model Number	App. Wgt. (lbs)	Voltage	F. L. Amps @ 575 V	% F.L. Eff.	Service Factor	"C" Dim. (Inches)	♥Notes
1/3	1800	56C	**191229.00**	√	C6T17NC299A	29	575	0.52	78.5	1.15	9.78	S,CN,12
1/3	1800	56C	**191509.00**	D	C6T17WC41	29	575	.51	75.0	1.15	11.2	S,CN,13
1/2	1800	56C	**191232.00**	√	C6T17NC300A	32	575	0.65	81.5	1.15	9.78	S,CN,12
1/2	1800	56C	**191510.00**	√	C6T17WC42	32	575	.79	78.0	1.15	11.2	S,CN,13
3/4	1800	56C	**191235.00**	√	C6T17NC301A	38	575	0.95	82.5	1.15	9.78	S,CN,12
3/4	1800	56C	**191511.00**	√	M4S17DH21A	38	575	1.1	80.0	1.15	11.2	S,CN,13
1	1800	56C	**191240.00**	D	C6T17FC180A	46	575	1.2	82.5	1.15	13.77	S,CN,13
1	1800	56C	**191605.00**	√	C6T17FC207FR	48	575	1.2	85.5	1.15	13.4	S,CN,13
1	1800	145TC	**191241.00**	D	C143T17FC29A	47	575	1.2	82.5	1.15	13.62	S,CN,13
1	1800	145TC	**191606.00**	√	C143T17FC33A	48	575	1.2	85.5	1.15	13.8	S,CN,13
1	1800	56C	**191246.00**	D	C6T17FC181A	47	575	1.9	84.0	1.15	13.77	S,CN,13
1 1/2	1800	56C	**191607.00**	√	C6T17FC208A	48	575	1.8	86.5	1.15	13.4	S,CN,13
1 1/2	1800	145TC	**191247.00**	D	C145T17FC81A	48	575	1.9	84.0	1.15	13.62	S,CN,13
1 1/2	1800	145TC	**191608.00**	√	C145T17FC91FR	48	575	1.8	86.5	1.15	13.8	S,CN,13
2	1800	56C	**191252.00**	D	C6T17FC182A	51	575	2.3	84.0	1.15	13.77	S,CN,13
2	1800	56C	**191609.00**	√	C6T17FC209FR	52	575	2.2	86.5	1.15	13.8	S,CN,13
2	1800	145TC	**191253.00**	D	C145T17FC82A	52	575	2.3	84.0	1.15	13.62	S,CN,13
2	1800	145TC	**191610.00**	√	C145T17FC92A	52	575	2.2	86.5	1.15	14.25	S,CN,13

Green items are premium efficient.

D - Item to be discontinued once inventory is depleted.
Note 12: TENV
Note 13: TEFC

♥ Note listing on inside back flap.
Specifications are subject to change without notice.

NEMA is a trademark of National Electrical Manufacturers Association and is not owned or controlled by Regal Beloit Corporation.

Washguard® Motors

Premium - All Stainless Motors

Single-Phase & Three-Phase

Premium StainlessDuck

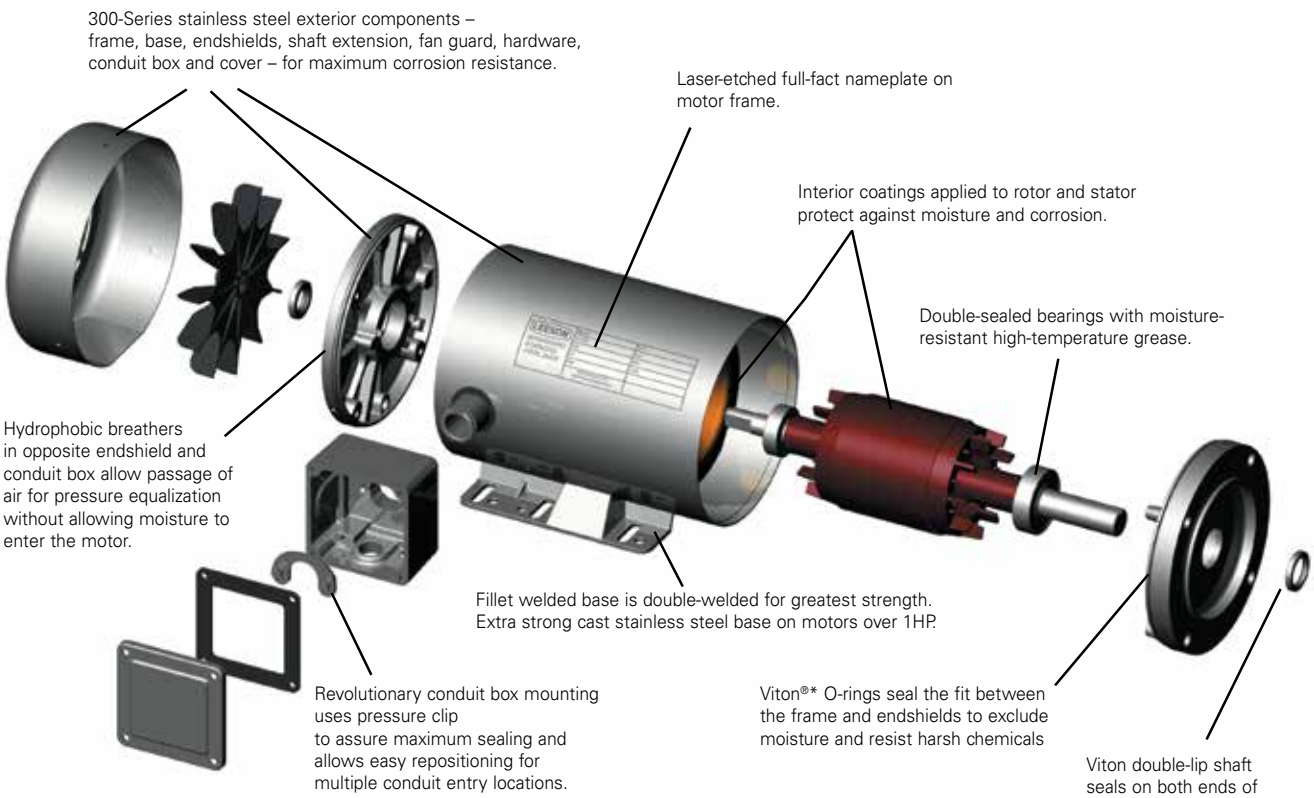

*Viton is believed to be the trademark or trade name of The Chemours Company FC and is not owned or controlled by Regal Beloit Corporation.

General Specifications:

Designed specifically to meet the demanding sanitation requirements of the pharmaceutical, food processing and beverage industries. These motors are also ideal in clean room and severe chemical processing applications involving frequent washdown with nitric acid and caustic lye.

Mechanical Protection Features:

- All exterior components are 300-series stainless steel
- Nothing on the motor's exterior is painted or coated in any way
- All sealing components are Viton®* for superior chemical resistance
- Full fact nameplate is laser etched on the motor frame – no separately attached nameplate to trap dirt or contaminants
- Endshields are O-ring sealed to the frame
- Double lip shaft seals on both ends of TEFC motors (shaft end only on TENV motors)
- Removable hydrophobic breathers in opposite shaft endbell and conduit box equalize pressure without allowing moisture to enter
- Exterior fastener use minimized reducing the number of entry points for moisture. There are no holes in the frame for attaching a nameplate. Bearing lock screws are located inside the motor and the conduit box mounted screws have been eliminated
- Double-sealed bearings are pre-lubricated with moisture-resistant high-temperature grease for long life
- Interior coatings applied to rotor and stator protect against corrosion
- New conduit box mounting system provides optimum sealing
- Ease to clean construction is BISSC Certified for bakery applications

Electrical Performance and Protection Features:

- WASHGUARD motor efficiencies meet EPAct mandates for non-exempt motors when tested without shaft seals
- Windings are immersed and cured in polyester insulating varnish for extra moisture-resistance
- LEESON® motors exclusive IRIS® inverter-rated insulation system provides extra protection and long life, especially in inverter-driven applications
- Single-phase motors use solid state Sinpac®* switch – no mechanical switch contacts to corrode and fail
- All Wash Down Duty® motors have Class F Insulation

Standards and Approvals:

- Single and three phase motors are UL component recognized – file number E57948, guide number PRGY2
- CSA Energy Efficiency Verification Program, report number EEV 78720-1
- Construction is CSA Certified for safety report number LR33543 and listed under BISSC authorization number 769

*Sinpac is believed to be the trademark or trade name of Rexnord Industries and is not owned or controlled by Regal Beloit Corporation.

*Viton is believed to be the trademark or trade name of The Chemours Company FC and is not owned or controlled by Regal Beloit Corporation.

Washguard® Motors

Premium - All-Stainless Motors

Three Phase - TENV/TEFC - C Face With Base - 230/460 Volts

HP	SYN RPM 60 Hz	NEMA® Frame	Catalogue Number	Availability	Model Number	App. Wgt. (lbs)	Voltage	F. L. Amps @ 230 V	% F.L. Eff.	Service Factor	"C" Dim. (Inches)	♥Notes
1/2	3600	56C	**117269.00**	√	CZ6T34VK19	35	230/460	1.6	82.5	1.15	10.47	S, US, 12
1/2	1800	S56C	**103387.00**	√	CZ4T17VK2	31	230/460	1.8	76.0	1.15	11.49	S, US, 12
1/2	1800	56C	**117266.00**	√	CZ6T17VK46	35	230/460	1.6	78.5	1.15	11.22	S, US, 12
1/2	1800	56C	**117762.00**	√	CZ6T17VK52	36	230/460	1.8	78.5	1.15	13.13	S, US, 13
1/2	1200	56C	**117275.00**	√	CZ6T11VK5	35	230/460	2.3	77.0	1.15	11.47	S, US, 12
3/4	3600	56C	**117271.00**	√	CZ6T34VK20	40	230/460	2.4	84.0	1.15	10.97	S, US, 12
3/4	1800	S56C	**103388.00**	√	CZ4T17WK1	28	230/460	2.4	77.0	1.15	12.50	S, US, 13
3/4	1800	56C	**117267.00**	√	CZ6T17VK47	41	230/460	2.3	80.0	1.15	11.72	S, US, 12
3/4	1200	56C	**117276.00**	√	CZ6T11VK6	46	230/460	3.0	78.5	1.15	13.22	S, US, 12
1	3600	56C	**117273.00**	√	CZ6T34VK21	43	230/460	2.6	85.5	1.15	13.04	S, US, 12
1	1800	56HC	**119973.00**	√	CZ6T17VK74	42	230/460	2.8	85.5	1.15	13.70	S, US, 12
1	1800	56HC	**119491.00**	√	CZ6T17WK52	42	230/460	3.2	85.5	1.15	11.94	S, US, 13
1	1800	143TC	**121873.00**	√	CZ143T17WK12	50	230/460	3.2	85.5	1.15	12.00	S, US, 13
1	1200	56HC	**119492.00**	√	CZ6T11WK12	51	230/460	3.8	82.5	1.15	12.69	S, US, 13
1 1/2	3600	143TC	**121874.00**	√	CZ143T34WK7	45	230/460	4.0	84.0	1.15	11.75	S, US, 13
1 1/2	1800	56HC	**119494.00**	√	CZ6T17WK56	51	230/460	4.4	86.5	1.15	11.94	S, US, 13
1 1/2	1800	145TC	**121875.00**	√	CZ145T17WK32	49	230/460	4.8	86.5	1.15	12.75	S, US, 13
1 1/2	1200	182TC	**132565.00**	√	CZ182T11WK2	85	230/460	6.0	87.5	1.15	14.27	S, US, 13
2	3600	145TC	**121876.00**	√	CZ145T34WK18	49	230/460	4.8	85.5	1.25	12.75	S, US, 13
2	1800	56HC	**119495.00**	√	CZ6T17WK54	52	230/460	5.8	86.5	1.15	13.19	S, US, 13
2	1800	145TC	**121877.00**	√	CZ145T17WK33	50	230/460	5.8	86.5	1.25	13.25	S, US, 13
3	3600	145TC	**121878.00**	√	CZ145T34WK27	53	230/460	8.0	86.5	1.15	13.00	S, US, 13
3	3600	182TC	**132203.00**	√	CZ182T34WK2	85	230/460	7.6	86.5	1.25	14.27	S, MX, 13
3	1800	182TC	**132206.00**	√	C184T17WK14	85	230/460	7.8	89.5	1.15	14.77	S, MX, 13
5	3600	184TC	**132207.00**	√	C184T34WK11	90	230/460	12.0	88.5	1.25	15.27	S, MX, 13
5	1800	184TC	**132208.00**	√	C184T17WK16	96	230/460	12.6	89.5	1.15	15.77	S, MX, 13
7 1/2	3600	213TC	**140825.00**	√	C213T34WK4	160	230/460	17.8	90.2	1.15	18.69	S, MX, 13
7 1/2	1800	213TC	**140826.00**	√	C213T17WK10	160	230/460	21.6	91.7	1.15	18.69	S, MX, 13
10	3600	215TC	**140827.00**	√	C215T34WK11	165	230/460	23.6	90.2	1.15	18.69	S, MX, 13
10	1800	215TC	**140828.00**	√	C215T17WK10	173	230/460	26.8	91.7	1.15	18.69	S, MX, 13

Green items are premium efficient.

Note 12: TENV
Note 13: TEFC

Note: 230/460 Volt motors are suitable for use at 208 Volts 60HZ at 1.0 Service factor.

♥ Note listing on inside back flap.
Specifications are subject to change without notice.

Premium - All-Stainless Motors

Three Phase - TENV/TEFC - C Face With Base - 575 Volts

HP	SYN RPM 60 Hz	NEMA Frame	Catalogue Number	Availability	Model Number	App. Wgt. (lbs)	Voltage	F. L. Amps @ 575 V	% F.L. Eff.	Service Factor	"C" Dim. (Inches)	♥Notes
3	1800	182TC	**132266.00**	√	C182T17WK18A	85	575	3.3	89.5	1.15	14.77	S, MX, 13
5	3600	184TC	**132267.00**	√	C184T34WK15A	90	575	4.8	88.5	1.15	14.77	S, MX, 13
5	1800	184TC	**132268.00**	√	C184T17WK20A	96	575	5.2	89.5	1.15	15.27	S, MX, 13
71/2	3600	213TC	**141125.00**	√	C213T34WK7A	160	575	7.4	89.5	1.15	18.69	S, MX, 13
71/2	1800	213TC	**141126.00**	√	C213T17WK15A	160	575	8.2	91.7	1.15	18.69	S, MX, 13
10	3600	215TC	**141127.00**	√	C215T34WK13A	165	575	9.6	90.2	1.15	18.69	S, MX, 13
10	1800	215TC	**141128.00**	C/A	————	173	575	10.4	91.7	1.15	18.69	S, MX, 13

Green items are premium efficient.

Note 13: TEFC

♥ Note listing on inside back flap.
Specifications are subject to change without notice.

NEMA is a trademark of National Electrical Manufacturers Association and is not owned or controlled by Regal Beloit Corporation.

LEESON®

For a Full Selection of LEESON Washguard Motors please view the LEESON® L1050E Catalogue at www.regalbeloit.com

Washguard® Motors

Premium - All-Stainless Motors

Three Phase - TENV/TEFC - C Face Less Base - 230/460 Volts

HP	SYN RPM 60 Hz	NEMA® Frame	Catalogue Number	Availability	Model Number	App. Wgt. (lbs)	Voltage	F. L. Amps @ 230 V	% F.L. Eff.	Service Factor	"C" Dim. (Inches)	♥Notes
1/3	1800	48C	**103393.00**	C/A	CZ4T17VC7	25	230/460	1.3	70.5	1.15	9.83	S, US, 12
1/2	3600	56C	**117279.00**	√	CZ6T34VC22	35	230/460	1.6	82.5	1.15	10.47	S, US, 12
1/2	1800	48C	**103394.00**	√	CZ4T17VC3	27	230/460	1.8	76.0	1.15	11.58	S, US, 12
1/2	1800	S56C	**103389.00**	√	CZ4T17VC4	30	230/460	1.8	76.0	1.15	11.49	S, US, 12
1/2	1800	56C	**117270.00**	√	CZ6T17VC56	34	230/460	1.6	78.5	1.15	11.22	S, US, 12
3/4	3600	56C	**117280.00**	C/A	CZ6T34VC23	40	230/460	2.4	84.0	1.15	10.97	S, US, 12
3/4	1800	S56C	**103390.00**	√	CZ4T17WC1	33	230/460	2.4	77.0	1.15	12.50	S, US, 13
3/4	1800	56C	**117272.00**	√	CZ6T17VC57	40	230/460	2.3	80.0	1.15	11.72	S, US, 12
1	3600	56C	**117281.00**	√	CZ6T34VC24	43	230/460	2.6	85.5	1.15	12.22	S, US, 12
1	1800	56C	**119974.00**	√	CZ6T17VC73	51	230/460	2.8	85.5	1.15	13.22	S, US, 12
1	1800	56C	**119497.00**	√	CZ6T17WC57	47	230/460	3.2	85.5	1.15	11.94	S, US, 13
1	1800	143TC	**122202.00**	C/A	CZ143T17WC15	53	230/460	3.2	85.5	1.15	12.00	S, US, 13
1 1/2	3600	143TC	**122207.00**	√	CZ143T34WC8	55	230/460	4.0	84.0	1.15	12.00	S, US, 13
1 1/2	1800	56C	**117282.00**	D	CZ6T17WC28	49	230/460	4.4	84.0	1.15	11.94	S, US, 13
1 1/2	1800	56C	**119498.00**	√	CZ6T17WC52	52	230/460	4.8	86.5	1.15	12.94	S, US, 13
1 1/2	1800	145TC	**122203.00**	√	CZ145T17WC49	58	230/460	4.8	86.5	1.15	12.75	S, US, 13
2	3600	145TC	**122205.00**	√	CZ145T34WC24	57	230/460	4.8	85.5	1.15	13.25	S, US, 13
2	1800	56C	**119499.00**	√	CZ6T17WC58	51	230/460	5.8	86.5	1.15	13.25	S, US, 13
2	1800	145TC	**122204.00**	√	CZ145T17WC48	63	230/460	5.8	86.5	1.15	13.25	S, US, 13
3	3600	145TC	**122206.00**	√	CZ145T34WC25	58	230/460	8.0	86.5	1.15	13.00	S, US, 13
3	1800	182TC	**132447.00**	√	C182T17WC12	91	230/460	7.8	89.5	1.15	14.77	S, MX, 13
5	3600	184TC	**132449.00**	√	C184T34WC11	100	230/460	12.0	88.5	1.15	15.27	S, MX, 13
5	1800	184TC	**132448.00**	√	C184T17WC106	105	230/460	12.6	89.5	1.15	15.77	S, MX, 13

Green items are premium efficient.

D - Item to be discontinued once inventory is depleted.
C/A - Check Availability.
Note 12: TENV
Note 13: TEFC

Note: 230/460 Volt motors are suitable for use at 208 Volts 60HZ at 1.0 Service factor.

♥ Note listing on inside back flap.
Specifications are subject to change without notice.

NEMA is a trademark of National Electrical Manufacturers Association and is not owned or controlled by Regal Beloit Corporation.

Washguard® Motors

Premium - All-Stainless Motors

Single Phase - TENV/TEFC - C Face With Base

HP	SYN RPM 60 Hz	NEMA® Frame	Catalogue Number	Availability	Model Number	App. Wgt. (lbs)	Voltage	F. L. Amps @ 230 V	Service Factor	"C" Dim. (Inches)	♥Notes
1/3	1800	56HC	**116343.00**	√	NZ6C17VK1	35	115/208-230	2.7	1.15	12.20	S, US, 6, 12
1/2	3600	56HC	**116344.00**	√	NZ6C34VK2	38	115/208-230	3.8	1.15	12.20	S, US, 6, 12
1/2	1800	56HC	**116345.00**	√	NZ6C17VK2	38	115/208-230	3.3	1.15	12.70	S, US, 6, 12
3/4	1800	56HC	**116346.00**	√	CZ6K17VK2B	42	115/208-230	3.8	1.15	12.70	S, US, 6, 12
1	3600	56HC	**116347.00**	√	NZ6C34VK1	49	115/208-230	6.0	1.15	13.70	S, US, 6, 12
1	1800	56HC	**116348.00**	√	CZK17VK1B	49	115/208-230	4.5	1.15	13.70	S, US, 6, 12
1 1/2	3600	56HC	**116482.00**	C/A	CZ6K34WK1	49	115/208-230	6.8	1.15	13.81	S, US, 13
1 1/2	1800	145TC	**121622.00**	√	CZ145K17WK2	53	115/208-230	7.4	1.15	14.87	S, US, 13
2	3600	145TC	**121623.00**	C/A	CZ145K34WK1	57	115/208-230	8.8	1.15	14.87	S, US, 13
2	1800	145TC	**121632.00**	C/A	CZ145K17WK1	57	115/208-230	10.0	1.15	14.87	S, US, 13

C/A - Check Availability.
Note 12: TENV
Note 13: TEFC

♥ Note listing on inside back flap.
Specifications are subject to change without notice.

Single Phase - TENV/TEFC - C Face Less Base

HP	SYN RPM 60 Hz	NEMA Frame	Catalogue Number	Availability	Model Number	App. Wgt. (lbs)	Voltage	F. L. Amps @ 230 V	Service Factor	"C" Dim. (Inches)	♥Notes
1/3	1800	56C	**116349.00**	√	NZ6C17VC1	35	115/208-230	2.7	1.15	11.70	S, US, 12
1/2	1800	56C	**116350.00**	√	NZ6C17VC2	38	115/208-230	3.3	1.15	12.70	S, US, 12
3/4	1800	56C	**116351.00**	√	CZ6K17VC2	42	115/208-230	3.8	1.15	12.70	S, US, 12
1	1800	56C	**116352.00**	√	CZ6K17VC1	49	115/208-230	4.5	1.15	13.70	S, US, 12
1 1/2	1800	145TC	**121624.00**	C/A	CZ145K17WC2	53	115/208-230	7.4	1.15	14.87	S, US, 13
2	1800	145TC	**121633.00**	C/A	CZ145K17WC1	57	115/208-230	10.0	1.15	14.87	S, US, 13

C/A - Check Availability.
Note 12: TENV
Note 13: TEFC

♥ Note listing on inside back flap.
Specifications are subject to change without notice.

NEMA is a trademark of National Electrical Manufacturers Association and is not owned or controlled by Regal Beloit Corporation.

Washguard® Motors

NEMA® and IEC Washguard
All-Stainless DC Motors - SCR Rated
IP 55 Enclosure Protection

TEFC - SCR Rated 90 & 180 Volts - NEMA - C Face With Base

HP	Full Load RPM	NEMA® Frame	Catalogue Number	Availability	Model Number	App. Wgt. (lbs)	Arm. Volts DC	Control Volts AC Input	F. L. Amps DC	"C" Dim. (Inches)	♥Notes
1/4	1750	S56C	**109065.00**	√	C4D17VK24A	38	90	115	3.1	11.81	S, US, 12
1/3	1750	S56C	**109066.00**	√	C4D17VK25A	44	90	115	3.8	12.81	S, US, 12
1/3	1750	S56C	**109067.00**	√	C4D17VK26A	44	180	230	1.9	12.81	S, US, 12
1/2	1750	S56C	**109069.00**	√	C4D17WK9A	46	90	115	5.2	13.87	S, US, 13
1/2	1750	S56C	**109070.00**	√	C4D17WK10A	46	180	230	2.7	13.87	S, US, 13
3/4	1750	S56C	**109072.00**	√	C4D17WK13A	47	90	115	7.5	15.37	S, US, 13
3/4	1750	S56C	**109073.00**	√	C4D17WK14A	48	180	230	3.7	15.37	S, US, 13
1	1750	S56C	**109075.00**	√	C4D17WK16A	51	90	115	9.5	16.37	S, US, 13
1	1750	S56C	**109076.00**	√	C4D17WK17A	50	180	230	5.0	16.37	S, US, 13

Base is welded to frame and not removable.
Note 12: TENV
Note 13: TEFC

♥ Note listing on inside back flap.
Specifications are subject to change without notice.

TEFC - SCR Rated 90 & 180 Volts - NEMA - C Face Less Base

HP	Full Load RPM	NEMA Frame	Catalogue Number	Availability	Model Number	App. Wgt. (lbs)	Arm. Volts DC	Control Volts AC Input	F. L. Amps DC	"C" Dim. (Inches)	♥Notes
1/4	1750	S56C	**109078.00**	√	C4D17VC5A	38	90	115	3.1	11.81	S, US, 12
1/3	1750	S56C	**109079.00**	√	C4D17VC6A	44	90	115	3.8	12.81	S, US, 12
1/3	1750	S56C	**109080.00**	√	C4D17VC7A	44	180	230	1.9	12.81	S, US, 12
1/2	1750	S56C	**109082.00**	√	C4D17WC2A	46	90	115	5.2	13.87	S, US, 13
1/2	1750	S56C	**109083.00**	√	C4D17WC3A	46	180	230	2.7	13.87	S, US, 13
3/4	1750	S56C	**109085.00**	√	C4D17WC5A	47	90	115	7.5	15.37	S, US, 13
3/4	1750	S56C	**109086.00**	√	C4D17WC6A	48	180	230	3.7	15.37	S, US, 13
1	1750	S56C	**109088.00**	√	C4D17WC8A	51	90	115	9.5	16.37	S, US, 13
1	1750	S56C	**109089.00**	√	C4D17WC9A	50	180	230	5.0	16.37	S, US, 13

Base is welded to frame and not removable.
Note 12: TENV
Note 13: TEFC

♥ Note listing on inside back flap.
Specifications are subject to change without notice.

NEMA is a trademark of National Electrical Manufacturers Association and is not owned or controlled by Regal Beloit Corporation.

Washguard® Motors

Metric (IEC) Frame PMDC Motors
All-Stainless DC Motors - SCR Rated
IP55 Enclosure Protection

TEFC - SCR Rated 180 Volts - Metric (IEC) - All-Stainless Steel C Face With Base

HP/kW	Full Load RPM	IEC Frame	Catalogue Number	Availability	Model Number	App. Wgt. (lbs)	Arm. Volts DC	Control Volts AC Input	F. L. Amps DC	"C" Dim. (Inches)	♥Notes
1/3 - 0.25	1750	80D	**109068.00**	√	CI4D17VK27A	44	180	230	1.9	12.81	S, US, 12
1/2 - 0.37	1750	80D	**109071.00**	√	CI4D17WK11A	46	180	230	2.7	13.87	S, US, 13
3/4 - 0.55	1750	80D	**109074.00**	√	CI4D17WK15A	48	180	230	3.7	15.37	S, US, 13
1 - 0.75	1750	80D	**109077.00**	√	CI4D17WK18A	50	180	230	5.0	16.37	S, US, 13

Note 12: TENV
Note 13: TEFC

♥ Note listing on inside back flap.
Specifications are subject to change without notice.

TEFC - SCR Rated 180 Volts - Metric (IEC) - All-Stainless Steel - C Face Less Base

HP/kW	Full Load RPM	IEC Frame	Catalogue Number	Availability	Model Number	App. Wgt. (lbs)	Arm. Volts DC	Control Volts AC Input	F. L. Amps DC	"C" Dim. (Inches)	♥Notes
1/3 - 0.25	1750	80D	**109081.00**	√	CI4D17VC8A	44	180	230	1.9	12.81	S, US, 12
1/2 - 0.37	1750	80D	**109084.00**	√	CI4D17WC4A	46	180	230	2.7	13.87	S, US, 13
3/4 - 0.55	1750	80D	**109087.00**	√	CI4D17WC7A	48	180	230	3.7	15.37	S, US, 13
1 - 0.75	1750	80D	**109090.00**	√	CI4D17WC10A	50	180	230	5.0	16.37	S, US, 13

Note 12: TENV
Note 13: TEFC

♥ Note listing on inside back flap.
Specifications are subject to change without notice.

Flange And Face Kits For DC Metric (IEC) Frame Motors

The modular design concept of other LEESON® metric DC motors has been applied to the all-stainless metric motors. Any flange or face kit can mount on any motor. This allows the greatest flexibility from the smallest inventory of motors.

B5 Flange Kits (For Stainless DC Metric Motors)

IEC Frame	Catalogue Number	App. Wgt. (lbs)	BD Flange Dia. (mm)	AK Register (mm)	BF Hole (mm)	AJ Bolt Circle (mm)
71	**175593.00**	2	160	110	9	130
80	**175594.00**	3	200	130	12	165
90S/90L	**175594.00**	3	200	130	12	165
100L/112M	**175595.00**	5	250	180	15	215

Specifications are subject to change without notice.

B14 Flange Kits (For Stainless DC Metric Motors)

IEC Frame	Catalogue Number	App. Wgt. (lbs)	BD Flange Dia. (mm)	AK Register (mm)	BF Hole (mm)	AJ Bolt Circle (mm)
71	**175596.00**	1	105	70	6	85
80	**175597.00**	1	120	80	6	100
90S/90L	**175598.00**	1	140	95	6	115
100L/112M	**175599.00**	2	160	110	6	130

Specifications are subject to change without notice.

Extreme Duck® Ultra Washguard All-Stainless Motors
Three Phase - Standard, NEMA Premium®

ExtremeDuckUltra

300 Series stainless steel components include the frame, base, conduit box cover, endshields and bearing carrier cover. It's the perfect motor design for extreme washdown conditions.

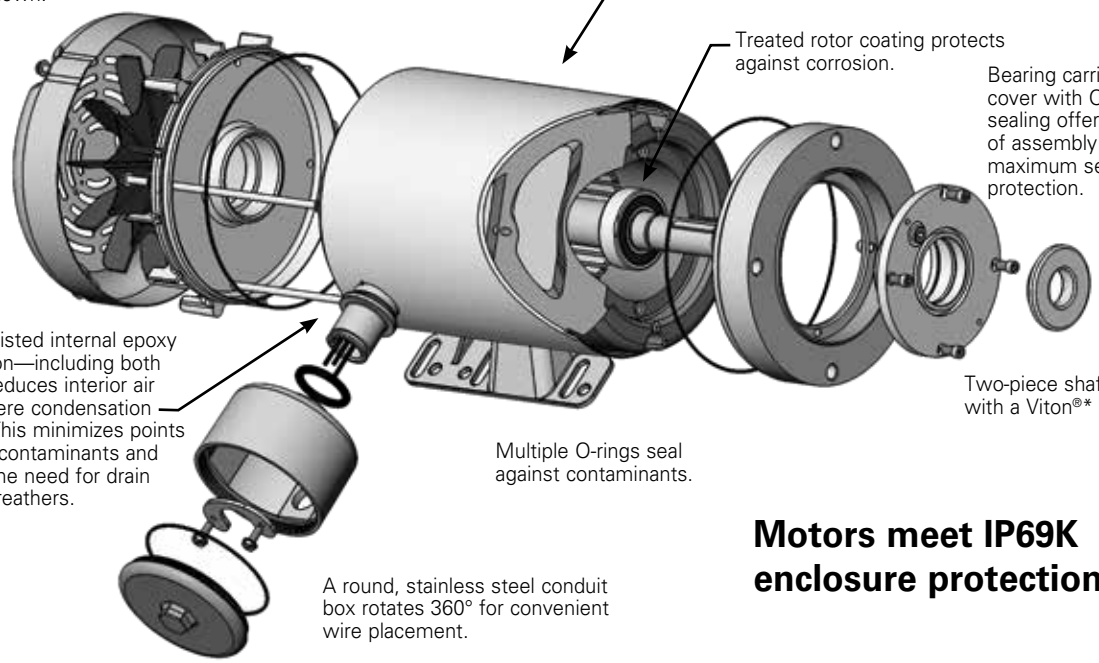

Motors meet IP69K enclosure protection.

The all new Extreme. It's not your average duck.

- **Extreme** Sealing
- **Extreme** Durability
- **Extreme** Confidence

The New Extreme DuckUltra**.**

*Viton is believed to be the trademark or trade name of The Chemours Company FC and is not owned or controlled by Regal Beloit Corporation.

NEMA Premium is a trademark of National Electrical Manufacturers Association and is not owned or controlled by Regal Beloit Corporation.

Washguard® Motors

Extreme Duck® Ultra Washguard All-Stainless Motors
Three Phase - Standard, EPAct & NEMA Premium® Ratings

General Specifications:

These revolutionary designed stainless steel motors are built using our "Voice of the customer" design criteria to withstand extreme washdown and sanitation requirements of the food processing, pharmaceutical, packaging and beverage industries. Our innovative hydro sealed system "HS2"protects from the "outside-in" by reducing entrance points of contaminants and eliminates the need for drain plugs and breathers. This proven process also minimizes exterior hardware, which may trap application elements. Our unique Q-Car™ rotor/cartridge seal system, gives quick access to the interior of the motor should the need arise. 300-series stainless steel used on all exterior surfaces gives ideal protection against severe chemical-processing applications and frequent washdown processes using salt water, nitric acids and solvents.

Mechanical Protection Features:

- Q-Car™ rotor cartridge design for quick access to the interior
- Full-fact nameplate etched in frame
- Double-sealed ball bearings with high temperature grease
- Non-wicking lead wires
- Two-piece shaft seal with flinger
- Color-coded motor leads
- Chemical and abrasion resistant lead markers
- Conduit box rotates 360 degrees on TEFC models
- Conduit box lead hole location rotatable on TEFC designs
- NEMA Premium® efficiency - 1 HP and above
- Enhanced encapsulation process
- IP69K enclosure protection

Electrical Performance and Protection Features:

- Total winding encapsulation using an epoxy resin
- LEESON® motors' exclusive IRIS® inverter-rated insulation system provides extra protection and long life, especially when used in applications driven by an inverter
- 10:1 constant torque operation

Standards and Approvals

- Motors are UL component recognized – file number E57948, guide number PRGY2
- CSA Energy Efficiency Verification Program, report number EEV 78720-1
- Construction is CSA Certified for safety, report number LR33543 and listed under BISSC authorization number 769

NEMA and NEMA Premium are trademarks of National Electrical Manufacturers Association and are not owned or controlled by Regal Beloit Corporation.

Three Phase - Totally Enclosed - C Face With Base - IP69K

HP	SYN RPM 60 Hz	NEMA® Frame	Catalogue Number	Availability	Model Number	App. Wgt. (lbs)	Voltage	F. L. Amps @ 230 V	% F.L. Eff.	Service Factor	"C" Dim. (Inches)	♥Notes
1/2	3600	56C	**117118.00**	√	CZ6T34TK1	39	230/460	1.6	82.5	1.15	10.47	S, US, 12
1/2	1800	S56C	**103411.00**	√	CZ4T17TK1	33	230/460	1.6	76.0	1.15	11.49	S, US, 12
1/2	1800	56C	**117119.00**	√	CZ6T17TK1	40	230/460	1.6	78.5	1.15	10.72	S, US, 12
1/2	1200	56C	**119266.00**	√	CZ6T11TK1	43	230/460	2.3	77.0	1.15	11.71	S, US, 12
3/4	3600	56C	**117120.00**	√	CZ6T34TK2	46	230/460	2.4	84.0	1.15	10.47	S, US, 12
3/4	1800	S56C	**103412.00**	√	CZ4T17UK1	39	230/460	2.3	77.0	1.15	12.50	S, US, 13
3/4	1800	56C	**117121.00**	√	CZ6T17TK2	47	230/460	2.3	80.0	1.15	11.47	S, US, 12
3/4	1200	56C	**119267.00**	√	CZ6T11TK2	50	230/460	3.0	78.5	1.15	12.69	S, US, 12
1	3600	56C	**117122.00**	√	CZ6T34TK3	48	230/460	2.6	85.5	1.15	11.22	S, US, 12
1	1800	56C	**119975.00**	√	CZ6T17TK5	53	230/460	2.8	85.5	1.15	13.21	S, US, 12
1	1800	56C	**119511.00**	√	CZ6T17UK1	53	230/460	3.2	85.5	1.15	11.94	S, US, 13
1	1800	143TC	**122219.00**	√	CZ143T17UK2	55	230/460	3.2	85.5	1.15	12.00	S, US, 13
1	1200	56HC	**119513.00**	√	CZ6T11UK1	55	230/460	3.8	82.5	1.15	12.69	S, US, 13
1 1/2	3600	143TC	**121879.00**	√	CZ143T34UK1	54	230/460	4.0	84.0	1.15	11.75	S, US, 13
1 1/2	1800	56C	**117296.00**	D	CZ6T17WK30	56	230/460	4.4	84.0	1.15	11.69	S, US, 13
1 1/2	1800	56C	**119522.00**	√	CZ6T17UK2	58	230/460	4.8	86.5	1.15	12.69	S, US, 13
1 1/2	1800	145TC	**121880.00**	√	CZ143T17UK1	56	230/460	4.4	86.5	1.15	12.75	S, US, 13
2	3600	145TC	**121881.00**	√	CZ145T34UK1	56	230/460	5.2	85.5	1.15	12.75	S, US, 13
2	1800	56HC	**119523.00**	√	CZ6T17UK3	61	230/460	5.8	86.5	1.15	13.19	S, US, 13
2	1800	145TC	**121882.00**	√	CZ145T17UK1	57	230/460	5.8	86.5	1.15	13.25	S, US, 13
3	3600	56C	**119526.00**	√	CZ6T34UK1	62	230/460	8.0	86.5	1.15	12.94	S, US, 13

Green items are premium efficient.

D - Item to be discontinued once inventory is depleted.
Note 12: TENV
Note 13: TEFC

Note: 230/460 Volt motors are suitable for use at 208 Volts 60HZ at 1.0 Service factor.

♥ Note listing on inside back flap.
Specifications are subject to change without notice.

Three Phase - Totally Enclosed - C - Face With Base - IP69K 575 Volts

HP	SYN RPM 60 Hz	NEMA Frame	Catalogue Number	Availability	Model Number	App. Wgt. (lbs)	Voltage	F. L. Amps @ 575 V	% F.L. Eff.	Service Factor	"C" Dim. (Inches)	♥Notes
1/2	1800	56C	**117527.00**	√	C6T17NK44A	40	575	0.64	78.5	1.15	10.72	S, US 12
3/4	1800	56C	**117525.00**	√	CZ6T17VK51A	47	575	0.92	80.0	1.15	11.46	S, US, 12
1	1800	56C	**117526.00**	D	C6T17VK50A	50	575	1.2	81.5	1.15	12.21	S, US, 12
1	1800	56C	**1110013.00**	√	CZ6T17VK71A	63	575	1.2	85.5	1.15	13.21	S, US, 12
1 1/2	1800	56C	**1110014.00**	√	CZ6T17WK77A	58	575	1.8	86.5	1.15	---	S, US, 13
1 1/2	1750	143TC	**122413.00**	√	CZ143T17WK24A	58	575	1.8	86.5	1.15	12.75	S, US, 13
2	3600	145TC	**122460.00**	√	CI45T34WK42A	65	575	1.9	85.5	1.15	12.75	S, US, 13
2	1800	145TC	**121955.00**	D	CZ145T17WK44A	57	575	5.6	84.0	1.15	13.25	S, US, 13
2	1800	145TC	**122414.00**	√	CZ145T17WK55A	66	575	2.4	86.5	1.15	13.25	S, US, 13

Green items are premium efficient.

D - Item to be discontinued once inventory is depleted.
Note 12: TENV
Note 13: TEFC

♥ Note listing on inside back flap.
Specifications are subject to change without notice.

NEMA and NEMA Premium are trademarks of National Electrical Manufacturers Association and are not owned or controlled by Regal Beloit Corporation.

Washguard® Motors

Extreme Duck® Ultra Washguard All-Stainless Motors
Three Phase - Standard, EPAct & NEMA Premium® Ratings

Three Phase - Totally Enclosed - C Face Less Base - IP69K

HP	SYN RPM 60 Hz	NEMA® Frame	Catalogue Number	Availability	Model Number	App. Wgt. (lbs)	Voltage	F. L. Amps @ 230 V	% F.L. Eff.	Service Factor	"C" Dim. (Inches)	♥Notes
1/3	1800	48C	**103417.00**	√	CZ4T17TC2	30	230/460	1.3	70.5	1.15	9.58	S, US, 12
1/2	3600	56C	**117126.00**	√	CZ6T34TC1	38	230/460	1.6	82.5	1.15	10.47	S, US, 12
1/2	1800	48C	**103418.00**	√	CZ4T17TC3	32	230/460	1.6	76.0	1.15	11.33	S, US, 12
1/2	1800	S56C	**103413.00**	√	CZ4T17TC1	32	230/460	1.6	76.0	1.15	11.49	S, US, 12
1/2	1800	56C	**117127.00**	√	CZ6T17TC1	39	230/460	1.6	78.5	1.15	10.97	S, US, 12
3/4	3600	56C	**117128.00**	√	CZ6T34TC2	45	230/460	2.4	84.0	1.15	10.97	S, US, 12
3/4	1800	S56C	**103414.00**	C/A	CZ4T17UC1	38	230/460	2.3	77.0	1.15	12.50	S, US, 13
3/4	1800	56C	**117129.00**	√	CZ6T17TC2	46	230/460	2.3	80.0	1.15	11.47	S, US, 12
1	3600	56C	**117130.00**	√	CZ6T34TC3	47	230/460	2.6	77.0	1.15	11.22	S, US, 12
1	1800	56C	**119976.00**	√	CZ6T17TC3	49	230/460	2.8	85.5	1.15	13.22	S, US, 12
1	1800	56C	**119512.00**	√	CZ6T17UC1	54	230/460	3.2	85.5	1.15	12.19	S, US, 13
1 1/2	3600	143TC	**121750.00**	D	CZ143T34WC2	53	230/460	4.0	82.5	1.15	11.00	S, US, 13
1 1/2	3600	143TC	**121908.00**	√	CZ143T34UC1	53	230/460	4.0	84.0	1.15	11.75	S, US, 13
1 1/2	1800	56C	**119520.00**	√	CZ6T17UC2	56	230/460	4.8	86.5	1.15	12.44	S, US, 13
1 1/2	1800	145TC	**121751.00**	D	CZ143T17WC5	55	230/460	4.4	84.0	1.15	11.25	S, US, 13
1 1/2	1800	145TC	**121909.00**	√	CZ143T17UC1	55	230/460	4.4	86.5	1.15	12.75	S, US, 13
2	3600	145TC	**121910.00**	√	CZ145T34UC1	55	230/460	5.2	85.5	1.15	12.75	S, US, 13
2	1800	145TC	**121911.00**	√	CZ145T17UC1	56	230/460	5.6	86.5	1.15	13.25	S, US, 13
2	1800	56C	**119524.00**	√	CZ6T17UC3	60	230/460	5.8	86.5	1.15	13.19	S, US, 13
3	3600	56C	**119525.00**	√	CZ6T34UC1	61	230/460	8.0	86.5	1.15	12.94	S, US, 13

Green items are premium efficient.

D - Item to be discontinued once inventory is depleted.
C/A - Check Availability.
Note 12: TENV
Note 13: TEFC

Note: 230/460 Volt motors are suitable for use at 208 Volts 60HZ at 1.0 Service factor.

♥ Note listing on inside back flap.
Specifications are subject to change without notice.

NEMA and NEMA Premium are trademarks of National Electrical Manufacturers Association and are not owned or controlled by Regal Beloit Corporation.

Washguard® Motors

Extreme Duck® Ultra Motors with Shaft Grounding Rings (SGRs)
SGRs help prevent bearing damage when running motors with AC Controls

Three Phase - Totally Enclosed - Rigid C Face - IP69K

HP	SYN RPM 60 Hz	NEMA® Frame	Catalogue Number	Availability	Model Number	App. Wgt. (lbs)	Voltage	F. L. Amps @ 230 V	% F.L. Eff.	Service Factor	"C" Dim. (Inches)	♥Notes
1/2	1800	56C	**117906.00**	√	CZ6T17TK3	40	230/460	1.6	78.5	1.15	10.97	S, US, 12
3/4	1800	56C	**117907.00**	√	CZ6T17TK4	47	230/460	2.3	80.0	1.15	11.47	S, US, 12
1	1800	56C	**119527.00**	√	CZ6T17UK4	55	230/460	3.2	85.5	1.15	12.22	S, US, 12
1 1/2	1800	56C	**119528.00**	√	CZ6T17UK5	58	230/460	4.8	85.5	1.15	12.44	S, US, 13
1 1/2	1800	143TC	**122221.00**	√	CZ143T17UK3	59	230/460	4.8	86.5	1.15	12.75	S, US, 13
2	1800	56C	**119529.00**	√	CZ6T17UK6	61	230/460	5.8	86.5	1.15	13.19	S, US, 13
2	1800	145TC	**122222.00**	√	CZ145T17UK2	62	230/460	5.8	86.5	1.15	13.25	S, US, 13
3	3600	56C	**119530.00**	√	CZ6T34UK2	64	230/460	8.0	86.5	1.15	13.19	S, US, 13

Green items are premium efficient.

Note 12: TENV
Note 13: TEFC

♥ Note listing on inside back flap.
Specifications are subject to change without notice.

Three Phase - Totally Enclosed - C Face Less Base - IP69K

HP	SYN RPM 60 Hz	NEMA Frame	Catalogue Number	Availability	Model Number	App. Wgt. (lbs)	Voltage	F. L. Amps @ 230 V	% F.L. Eff.	Service Factor	"C" Dim. (Inches)	♥Notes
3	3600	56C	**119531.00**	√	CZ6T34UC2	62	230/460	8.0	86.5	1.15	12.94	S, US, 13
3	1800	145TC	**122118.00**	D	CZ145T17WC42	61	230/460	8.6	82.5	1.15	13.19	S, US, 13

Green items are premium efficient.

D - Item to be discontinued once inventory is depleted.
Note 13: TEFC

Note: No Premium Eff. replacement for 122118.00.

Note: 230/460 Volt motors are suitable for use at 208 Volts 60HZ at 1.0 Service factor.

♥ Note listing on inside back flap.
Specifications are subject to change without notice.

*Aegis is believed to be a trademark or trade name of Illinois Tool Works Inc. and is not owned or controlled by Regal Beloit Corporation.

NEMA is a trademark of National Electrical Manufacturers Association and is not owned or controlled by Regal Beloit Corporation.

DE-FEATHERING

SCALDING

FEEDING

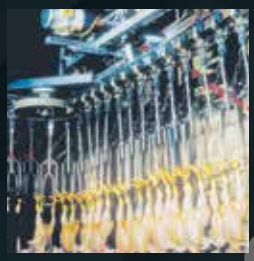
CUTTING

PROCESSING

SLICING

INSPECTION

DE-BONING

There's a LEESON® Washguard® Motor for every location in your facility.

Regal's LEESON motors offer more than 200 off-the-shelf solutions to everyday washdown needs. Also available are washdown-rated gear reducers and AC and DC controls to complement our washdown motor line. And, when you need a specially engineered custom solution to your washdown application, think LEESON washdown products. Our flexible manufacturing processes enable custom products to be manufactured in small or large quantities.

THE MOTORS THAT STAND UP TO WASHDOWN.

LEESON® WASHGUARD® MOTORS FEATURES AT A GLANCE

FEATURE	WHITE DUCK	WASHGUARD II	SST DUCK	STAINLESS DUCK	EXTREME DUCK® ULTRA
SEALING ADVANTAGES					
Complete motor encapsulation					■
Interior corrosion protection	■	■	■	■	■
Motor breather plugs/drain plugs	■	■	■	■	Not needed for total encapsulation
Shaft seals on both ends of TEFC motors	■	■	■	■	■
Two-piece shaft seal					■
Viton®* seals between endbells and frame				■	■
O-ring sealed openings				■	■
Potted lead entrance					■
INSTALLATION AND MAINTENANCE					
Color-coded leads					■
Non-wicking lead wires					■
Sealed bearings	■	■	■	■	■
Internally locked shaft-end bearing	■	■	■	■	■
Screw-on conduit box cover				■ ①	■
360° rotatable conduit box					■
Q-Car™ rotor cartridge interior access				■	■
CERTIFICATIONS					
Nameplate permanently etched in frame			■	■	■
60Hz and 50Hz data on nameplate	■	■	■	■	■
CE mark on nameplate	■	■	■	■	■
Standard motors built with inverter-rated insulation system and marked on nameplate (1 HP and higher)	■	■	■	■	■
IP Ratings	IP55	IP55	IP55	IP56	IP69K
UL, CSA listed	■	■	■	■	■
BISCC approved		■			■
SPECIAL CONSIDERATIONS					
Pump motor designs	■			■	
Brakemotor designs	■			■	
DC motors available	■			■	
Metric designs available				■	■
Local inventory support	■	■	■	■	■

① 56/143/145T frame ratings ② Premium efficient motors

EXTREME DUCK ULTRA HANDLES THE HARSHEST WASHDOWN ENVIRONMENTS.

1. Poultry processing plants. 2. Cheese processing plants. 3. Water bottling plants.
4. Conveying for bottling industry for breweries. 5. Chemical processing plants.
6. Pharmaceutical plants. 7. Brewery equipment. 8. Seafood processing plants.

*Viton is believed to be the trademark or trade name of The Chemours Company FC and is not owned or controlled by Regal Beloit Corporation.

General Purpose & Definite Purpose - Agricultural Duty Motors

- Gasketed capacitor cases and conduit box covers
- Meets or exceeds NEMA® service factors
- Single phase and three phase designs
- Double sealed ball bearings
- Double shielded ball bearings on ag fan motors
- Condensate drains on general purpose ag motors
- Low temperature manual overload protected
- High and extra high starting torque ratings
- UL recognized component listing and CSA certified
- 15HP - 1 phase, TEFC, crop dryer motor - NEW, page 126

Applications:
For use where exposure to water, dust and dirt exists. Ideally suited for use in farm / ag equipment such as feeders, conveyors, fans, grain elevators, silo unloaders, and other demanding farm duty equipment.

NEMA is a trademark of National Electrical Manufacturers Association and is not owned or controlled by Regal Beloit Corporation.

LEESON®

Agricultural Duty Motors

High Torque - General Purpose

Single Phase - TEFC - Rigid Base

HP	SYN RPM 60 Hz	NEMA® Frame	Catalogue Number	Availability	Model Number	App. Wgt. (lbs)	Voltage	Over-load Prot.	F. L. Amps @ 230 V	Service Factor	"C" Dim. (Inches)	♥Notes
1/3	1800	56	**113256.00**	√	M6C17FB66	20	115/208-230	Man.	3.2	1.15	10.98	S, US
1/2	1800	56	**110086.00**	√	M6C17FB11	22	115/208-230	Man.	4.4	1.15	10.98	S, US
3/4	1800	56	**110087.00**	√	M6C17FB9	26	115/208-230	Man.	5.4	1.15	11.48	S, US
1	1800	56	**110088.00**	√	M6C17FB10	30	115/208-230	Man.	7.0	1.15	11.98	S, US
1	1800	143T	**121569.00**	√	M143C17FB13	30	115/208-230	Man.	7.0	1.15	12.99	S, US
1 1/2	1800	56H	**110089.00**	√	M6K17FB3	41	115/208-230	Man.	8.6	1.15	12.99	S, US, 6, 53
1 1/2	1800	56HZ	**113938.00**	√	M6K17FB39	39	115/208-230	Man.	8.6	1.15	13.93	S, US, 3, 53
2	1800	56HZ	**110090.00**	√	M6K17FB4	43	230	Man.	9.2	1.15	13.93	S, US, 3, 53
2	1800	182T	**131541.00**	√	P182C17FB12	50	115/208-230	Man.	12.4	1.15	14.46	S, MX
3	1800	184T	**131542.00**	√	P184C17FB13	83	230	Man.	19.0	1.15	16.46	S, MX
5	1800	184T	**131543.00**	√	P184K17FB16	96	230	Man.	20.5	1.15	17.46	S, MX, 53
7 1/2	1800	215T	**140707.00**	√	P215K17FB15	144	230	Man.	32.0	1.15	20.21	S, MX, 53
10	1800	215T	**140706.00**	√	P215K17FB16	152	230	Man.	40.0	1.15	20.71	S, MX, 53

♥ Note listing on inside back flap.
Specifications are subject to change without notice.

ECO Ag® - Premium Efficient Farm Duty Motors

Features:

- Premium efficient designs
- Double sealed ball bearings
- Shaft flinger - output shaft
- Manual overload protected
- Weep holes provide condensation drains

Single Phase - TEFC - Rigid Base

HP	RPM 60 Hz	NEMA Frame	Catalogue Number	Availability	Model Number	App. Wgt. (lbs)	Voltage	Over-load Prot.	F. L. Amps @ 230V	% F.L. Eff	Service Factor	"C" Dim. (Inches)	♥Notes
1/3	1800	56	**117689.00**	√	M6K17FB56	27	115/208-230	Man.	1.7	76.0	1.15	10.99	S, US, 53
1/2	1800	56	**117690.00**	√	M6K17FB57	30	115/208-230	Man.	2.5	78.0	1.15	11.49	S, US, 53
3/4	1800	56	**117691.00**	√	M6K17FB60	35	115/208-230	Man.	3.2	82.0	1.15	11.99	S, US, 53
1	1800	56	**117692.00**	√	M6K17FB58	37	115/208-230	Man.	4.2	83.0	1.15	12.49	S, US, 53
1	1800	143T	**121973.00**	√	M143K17FB3	38	115/208-230	Man.	4.2	83.0	1.15	12.93	S, US, 53
1 1/2	1800	56H	**117693.00**	√	M6K17FB59	43	115/208-230	Man.	6.5	84.0	1.15	13.49	S, US, 6, 53
1 1/2	1800	145T	**121974.00**	√	M143K17FB4	44	115/208-230	Man.	6.5	84.0	1.15	13.93	S, US, 53
2	1800	145T	**121975.00**	√	M145K17FB29	49	230	Man.	8.2	85.0	1.15	14.43	S, US, 53

Green items are premium efficient.

♥ Note listing on inside back flap.
Specifications are subject to change without notice.

NEMA is a trademark of National Electrical Manufacturers Association and is not owned or controlled by Regal Beloit Corporation.

Agricultural Duty Motors

Hi-Torque and Extra Hi-Torque

Single Phase - TEFC - Rigid Base - Extra Hi-Torque - 5, 7 1/2 & 10 HP

HP	SYN RPM 60 Hz	NEMA® Frame	Catalogue Number	Availability	Model Number	App. Wgt. (lbs)	Voltage	Over-load Prot.	F. L. Amps @ 230V	Service Factor	"C" Dim. (Inches)	♥Notes
2	1800	182T	**131541.00**	√	P182C17FB12	65	115/208-230	Man.	12.4	1.15	14.46	S, MX
3	1800	184T	**131542.00**	√	P184C17FB13	96	230	Man.	19.0	1.15	16.46	S, MX
5	1800	215T	**140203.00**	√	P215K17FB3	122	230	Man.	24.0	1.15	18.71	S, MX, 53
5	1800	215T	**141433.00**	√	P215K17FB82A	120	230	Man.	22.6	1.15	18.34	S, MX, 53
5	1800	215TZ	**140223.00**	D	P215K17FB5	152	230	Man.	24.0	1.15	18.71	S, MX, 4, 53
5	1800	215TZ	**141432.00**	√	P215K17FB81A	—	230	Man.	22.6	1.15	18.34	S, MX, 53
7 1/2	1800	215T	**140130.00**	D	P215K17FB2	152	230	Man.	33.6	1.15	20.21	S, MX, 53
7 1/2	1800	215T	**141434.00**	√	P215K17FB78A	152	230	Man.	30.5	1.15	21.09	S, MX, 53
7 1/2	1800	215TZ	**140209.00**	D	P215K17FB4	159	230	Man.	33.6	1.15	20.21	S, MX, 4, 53
7 1/2	1800	215TZ	**141427.00**	√	P215K17FB79A	159	230	Man.	30.5	1.15	20.21	S, MX, 53
10	1800	215T	**140414.00**	√	P215K17FB6	156	230	Man.	40.0	1.15	20.71	S, MX, 53

♥ Note listing on inside back flap.
Specifications are subject to change without notice.

Single Phase - TEFC - High Torque - C Face Less Base

HP	SYN RPM 60 Hz	NEMA Frame	Catalogue Number	Availability	Model Number	App. Wgt. (lbs)	Voltage	Over-load Prot.	F. L. Amps @ 230V	Service Factor	"C" Dim. (Inches)	♥Notes
1/3	1800	56C	**113290.00**	√	M6C17FC59	28	115/208-230	Man.	3.2	1.15	10.98	S, US
1/2	1800	56C	**110492.00**	√	M6C17FC12	22	115/208-230	Man.	4.4	1.15	10.98	S, US
3/4	1800	56C	**110493.00**	√	M6C17FC13	29	115/208-230	Man.	5.4	1.15	11.49	S, US
1	1800	56C	**110494.00**	√	M6C17FC14	33	115/208-230	Man.	7.0	1.15	11.99	S, US
1 1/2	1800	56C	**110495.00**	√	M6K17FC3	43	115/208-230	Man.	8.6	1.15	12.99	S, US, 53
2	1800	145TC	**120855.00**	√	M145K17FC13	45	230	Man.	9.2	1.15	13.75	S, US, 53
3	1800	184TC	**131603.00**	√	P184C17FC5	104	230	Man.	19.0	1.15	16.47	S, MX
5	1800	184TC	**131602.00**	√	P184K17FC7	104	230	Man.	20.5	1.15	17.47	S, MX, 53

♥ Note listing on inside back flap.
Specifications are subject to change without notice.

Single Phase - TEFC - High Torque - C Face With Base

HP	SYN RPM 60 Hz	NEMA Frame	Catalogue Number	Availability	Model Number	App. Wgt. (lbs)	Voltage	Over-load Prot.	F. L. Amps @ 230V	Service Factor	"C" Dim. (Inches)	♥Notes
1/3	1800	56C	**116485.00**	√	M6C17FK81	29	115/208-230	Man.	3.2	1.15	10.98	S, US
1/2	1800	56C	**116486.00**	√	M6C17FK80	23	115/208-230	Man.	4.4	1.15	10.98	S, US
3/4	1800	56C	**116487.00**	√	M6C17FK79	30	115/208-230	Man.	5.4	1.15	11.48	S, US
1	1800	56C	**116488.00**	√	M6C17FK78	34	115/208-230	Man.	7.0	1.15	11.98	S, US
1 1/2	1800	56HC	**116489.00**	√	M6K17FK47	44	115/208-230	Man.	8.6	1.15	12.99	S, US, 6, 53
2	1800	145TC	**121625.00**	√	M145K17FK11	48	230	Man.	9.2	1.15	13.75	S, US, 53
3	1800	184TC	**131994.00**	√	P184C17FK10	105	230	Man.	19.0	1.15	16.47	S, MX
5	1800	184TC	**131995.00**	√	P184K17FK13	105	230	Man.	20.5	1.15	17.47	S, MX, 53

♥ Note listing on inside back flap.
Specifications are subject to change without notice.

NEMA is a trademark of National Electrical Manufacturers Association and is not owned or controlled by Regal Beloit Corporation.

LEESON®

Agricultural Duty Motors

Industry-AG - High Torque

General purpose, heavy duty for industrial and agriculture applications

Features:

- Manual overload protected
- Double sealed ball bearings
- Weather resistant reset button protection
- Capacitor start provides high starting torque

Rigid Base - 115-208/230 Volts - TEFC

HP	SYN RPM 60 Hz	NEMA® Frame	Catalogue Number	Availability	Model Number	App. Wgt. (lbs)	Voltage	Over-load Prot.	F. L. Amps @ 230V	Service Factor	"C" Dim. (Inches)	♥Notes
1/3	1800	56	**M002256.00**	D	M6C17FB142	24	115-208/230	Man.	2.9	1.15	11.00	S, CN
1/3	1800	56	**117862.00**	√	M6C17FB164	20	115-208/230	Man.	3.3	1.15	11.82	S, MX
1/2	1800	56	**117863.00**	√	M6C17FB165	26	115-208/230	Man.	4.4	1.15	11.82	S, MX
3/4	1800	56	**M009087.00**	D	M6C17FB144A	29	115-208/230	Man.	5.0	1.15	11.25	S, CN
3/4	1800	56	**117864.00**	√	M6C17FB166	33	115-208/230	Man.	5.5	1.15	12.32	S, MX
1	1800	56	**117865.00**	√	M6C17FB167	33	115-208/230	Man.	6.7	1.15	12.82	S, MX
1 1/2	1800	56H	**117866.00**	√	M6K17FB61	50	115-208/230	Man.	7.6	1.15	13.82	S, MX, 6
2	1800	56HZ	**117867.00**	√	M6K17FB62	50	115-208/230	Man.	9.4	1.15	14.87	S, MX, 3

"M00" Series motors use C Face Kit M064076.00.
D - Item to be discontinued once inventory is depleted.

♥ Note listing on inside back flap.
Specifications are subject to change without notice.

C Face for Industrial Ag Motors

Motor Catalogue Number	NEMA Frame	C-Flange Catalogue Number	Availability
M00XXX Models	56	M064076.00	D
117XXX Models	56	LM24808.00	√
117XXX Models	56HZ/140T	LM24810.00	√

D - Item to be discontinued once inventory is depleted.

C Face Less Base - 115-208/230 Volts - TEFC

HP	SYN RPM 60 Hz	NEMA Frame	Catalogue Number	Availability	Model Number	App. Wgt. (lbs)	Voltage	Over-load Prot.	F. L. Amps @ 230V	Service Factor	"C" Dim. (Inches)	♥Notes
1/3	1800	56C	**117878.00**	√	M6C17FC178	23	115-208/230	Man.	3.3	1.15	11.82	S, MX
1/2	1800	56C	**117879.00**	√	M6C17FC179	24	115-208/230	Man.	4.4	1.15	11.82	S, MX
3/4	1800	56C	**117880.00**	√	M6C17FC180	28	115-208/230	Man.	5.5	1.15	12.32	S, MX
1	1800	56C	**117881.00**	√	M6C17FC181	30	115-208/230	Man.	6.7	1.15	12.82	S, MX

♥ Note listing on inside back flap.
Specifications are subject to change without notice.

NEMA is a trademark of National Electrical Manufacturers Association
and is not owned or controlled by Regal Beloit Corporation.

Agricultural Duty Motors

Fan Duty - Single and Three Phase
Two-Winding Variable Torque PSC Type For Shaft Mounted Fan Application

Features:

- Variable torque
- PSC type for shaft mounted fan applications
- Listed speed or two speed operation using the proper auxiliary switch - reference drawing 005210.01
- UL and CSA recognized reset protector
- Extended through-bolts
- Epoxy painted

Single Phase - TEAO - PSC Type

HP	SYN RPM 60 Hz	NEMA® Frame	Catalogue Number	Availability	Model Number	App. Wgt. (lbs)	Voltage	Over-load Prot.	F. L. Amps @ 230V	Service Factor	Mounting	Shaft Length x Width (IN.)	♥Notes
1/4	1725	48YZ	**101252.00**	√	A4P17NB27	19	115/230	Auto.	1.6	1.0	R,E	2-1/2 x 1/2	S, MX, 50
1/4	1625	48YZ	**100699.00**	√	A4P17NB7	19	115/230	Auto.	1.4	1.0	R,E	2-1/2 x 1/2	S, MX
1/4	1625	48YZ	**100803.00**	√	A4P17NR1	19	115/230	Auto.	1.4	1.0	R-B,E	2-1/4 x 1/2	S, MX, 16, 34
1/4	1075	48YZ	**100824.00**	√	A4P11NR2	20	115/230	Auto.	1.4	1.0	R-B,E	2-1/4 x 1/2	S, MX, 16, 34
1/4	1075	S56YZ	**100805.00**	√	A4P11NJ1	22	115/230	Auto.	1.4	1.0	R-B,E	2-5/8 x 5/8	S, MX, 17, 34
1/4	1070	48YZ	**A099260.00**	C/A	A4P11NB52	21	115/230	Auto.	1.5	1.0	R,E	2-1/2 x 1/2	S, MX
1/3	1725	48YZ	**101253.00**	√	A4P17NB28	22	115/230	Auto.	1.9	1.0	R,E	2-1/2 x 1/2	S, MX,50
1/3	1625	48YZ	**100700.00**	√	A4P17NB8	22	115/230	Auto.	1.6	1.0	R,E	2-1/2 x 1/2	S, MX
1/3	1625	48YZ	**100804.00**	√	A4P17NR2	22	115/230	Auto.	1.6	1.0	R-B,E	2-1/4 x 1/2	S, MX, 16, 34
1/3	1625	S56Y	**100767.00**	√	A4P17NJ1	23	115/230	Auto.	1.6	1.0	R-B,E	1-7/8 x 5/8	S, MX, 34
1/3	1625	56YZ	**111202.00**	C/A	A6P17NZ1	24	115/230	Auto.	1.7	1.0	P,B,E	3 x 1/2	S, US, 58
1/3	1625	56HYZ	**111348.00**	√	A6P17NZ6	24	115/230	Auto.	1.7	1.0	B,P,E,R-B,F	3 x 1/2	S, US, 59
1/3	1125	S56Z	**100604.00**	√	A4P11NH1	23	115/230	Auto.	1.8	1.0	R,E	3 x 5/8	S, MX
1/3	1075	48YZ	**100825.00**	√	A4P11NR3	24	115/230	Auto.	1.8	1.0	R-B,E	2-1/4 x 1/2	S, MX, 16, 34
1/3	1075	S56Z	**100806.00**	√	A4P11NJ2	27	115/230	Auto.	1.8	1.0	R-B,E	2-5/8 x 5/8	S, MX, 17, 34
1/3	1075	48YZ	**A099261.00**	√	A4P11NB53	28	115/230	Auto.	1.8	1.0	R,E	2-1/2 x 1/2	S, MX
1/2	1725	S56YZ	**101176.00***	√	A4K17NH2	26	115/230	Auto.	3.5	1.0	R,E	2-1/2 x 5/8	S, MX, 50, 54
1/2	1625	48YZ	**100701.00**	√	A4P17NB9	29	115/230	Auto.	2.5	1.0	R,E	2-1/2 x 1/2	S, MX
1/2	1625	S56	**100768.00**	√	A4P17NJ2	36	115/230	Auto.	2.2	1.0	R-B,E	1-7/8 x 5/8	S, MX, 34
1/2	1075	56HZ	**111321.00***	√	A6P11NR1	36	115/230	Auto.	3.0	1.0	R-B,E	2-5/8 x 5/8	S, US, 17, 34
1/2	1075	48YZ	**A099262.00**	√	A4P11NZ239	32	115/230	Auto.	2.5	1.0	R,E	2-1/2 x 1/2	S, MX
1/2	825	56HZ	**111919.00***	√	A6P8NR2	40	115/230	Auto.	3.2	1.0	R-B,E	2-5/8 x 5/8	S, US, 17, 34, 50
1/2	850	48YZ	**A099836.00**	√	A4P8NR2A	24	115/230	Auto.	3.0	1.0	R-B,E	2 x 5/8	S, MX, 19, 34, 50
3/4	1625	56HZ	**111324.00**	√	A6P17NR4	34	115/230	Auto.	3.5	1.0	R-B,E	2-5/8 x 5/8	S, US, 17
3/4	1625	56H	**111266.00**	√	A6P17NR1	36	115/230	Auto.	3.5	1.0	R-B,E	1-7/8 x 5/8	S, US
3/4	1075	56HZ	**A099847.00**	√	A6P11NB5	35	115/230	Auto.	3.7	1.0	R,E	2-5/8 x 5/8	S, MX
3/4	1075	56HZ	**111322.00***	√	A6P11NR2	44	115/230	Auto.	4.0	1.0	R-B,E	2-5/8 x 5/8	S, US, 17, 50
1	1625	56H	**111267.00**	√	A6P17NR2	39	115/230	Auto.	4.4	1.0	R-B,E	1-7/8 x 5/8	S,US
1	825	56CZ	**A009644.00**	C/A	A6P8NC7B	47	230	Auto.	5.2	1.10	C	3-1/2 x 3/4	S, US

C/A - Check Availability.
*Single speed only - not suitable for variable speed operation.

♥ Note listing on inside back flap.
Specifications are subject to change without notice.

Mounting Legend.
R = Rigid Base
E = Extended Thru-bolts (10-32 gauge extends 1" beyond the nut)
R-B = Resilient Base
C = C Flange
B = BellyBand
P = Pedestal (holes tapped - 2)
F = Four bolt (holes tapped - 4)

NEMA is a trademark of National Electrical Manufacturers Association and is not owned or controlled by Regal Beloit Corporation.

LEESON®

Agricultural Duty Motors
Aeration Fan Motors

Features:

- Belt driven fans or fan on shaft applications
- Capacitor start designs
- Must be mounted in airstream for proper cooling
- Epoxy paint to resist corrosion
- Single-phase models have built-in terminal boards

Single Phase - Capacitor Start - TEAO - Rigid Base

HP	SYN RPM 60 Hz	NEMA® Frame	Catalogue Number	Availability	Model Number	App. Wgt. (lbs)	Voltage	F. L. Amps @ 230V	Service Factor	"C" Dim. (Inches)	♥Notes
3/4	3450	56Z	**111332.00**	√	C6C34NB15	27	115/230	5.0	1.0	10.9	S, US, 22
1	3450	56Z	**111333.00**	√	C6C34NB16	29	115/230	6.0	1.0	10.9	S, US, 22
1 1/2	3450	56Z	**111949.00**	√	C6C34NB19	32	115/230	8.5	1.0	11.4	S, US, 22
1 1/2	3450	143TZ	**120374.00**	√	C143C34NB1	31	115/230	8.5	1.0	11.84	S, US, 23
2	3450	145TZ	**120375.00**	√	C145C34NB1	41	230	10.0	1.0	12.84	S, US, 23
3	3450	145T	**120376.00**	√	C145K34NB1	45	230	12.8	1.0	13.84	S, US, 53

♥ Note listing on inside back flap.
Specifications are subject to change without notice.

Agricultural Duty Motors
Crop Dryer Motors

Used on crop dryers with air over/fan on shaft designs

Features:

- Class "F" insulation system
- Overload protected
- Keyed shaft with 1/4-20 UNC tapped hole on end
- 34" long leads
- Capacitors shipped loose on 1-phase 215TZ designs
- Motor venting protected against insects and rodents
- Double sealed ball bearings

Single Phase - Drip-Proof Air Over - Rigid Base

HP	SYN RPM 60 Hz	NEMA Frame	Catalogue Number	Availability	Model Number	App. Wgt. (lbs)	Voltage	Over-load Prot.	F. L. Amps @ 230V	Service Factor	"C" Dim. (Inches)	♥Notes
5 - 7	3600	182TZ	**131847.00**	√	C182C34DB2	94	230	T-Stat	26.8-35	1.00	16.44	S, MX
7.5-10	3600	182TZ	**131848.00**	√	C182K34DB4	98	230	T-Stat	31-42	1.00	16.44	S, MX, 53
10 - 15	3600	215TZ	**140640.00**	√	C215K34DB2	162	230	T-Stat	39.5-61.5	1.00	20.42	S, MX, 53
10 - 15	3600	215TZ	**141084.00**	√	C215K34DB3	159	230	T-Stat	40-59	1.00	20.08	S, MX, 53

♥ Note listing on inside back flap.
Specifications are subject to change without notice.

NEMA is a trademark of National Electrical Manufacturers Association and is not owned or controlled by Regal Beloit Corporation.

Agricultural Duty Motors

Grain Dryer / Centrifugal Fan Motor

Single Phase - Drip-Proof - 230 Volts - Rigid Base

HP	SYN RPM 60 Hz	NEMA® Frame	Catalogue Number	Availability	Model Number	App. Wgt. (lbs)	Voltage	F. L. Amps @ 230V	Service Factor	"C" Dim. (Inches)	♥Notes
16	1800	256TZ	**851034.00**	√	C256K17DB1A	308	208-230	61.0	1.15	25.52	S, MX, 53

Grain Dryer / Centrifugal Fan Motor

Features:

- 335% starting torque & 89% efficient
- Oversized sealed bearings
- Epoxy paint
- Rolled steel with cast iron endbells
- Colored leads

NEW!

Single Phase - TEFC - 230 Volts - Rigid Base

HP	SYN RPM 60 Hz	NEMA Frame	Catalogue Number	Availability	Model Number	App. Wgt. (lbs)	Voltage	F. L. Amps @ 230V	Service Factor	"C" Dim. (Inches)	♥Notes
15	1800	256TZ	**851150.00**	√	C256K17FB1	309	208-230	58	1.0	28.65	S, MX, 53

Three Phase - Drip-Proof Air Over - Rigid Base

HP	SYN RPM 60 Hz	NEMA Frame	Catalogue Number	Availability	Model Number	App. Wgt. (lbs)	Voltage	Over-load Prot.	F. L. Amps @ 230V	Service Factor	"C" Dim. (Inches)	♥Notes
5-7.5	3600	184TZ	**131849.00**	√	C184T34DB8	70	230/460	T-Stat	12.5 - 19.0	1.00	13.94	S, MX
7.5-10	3600	184TZ	**131850.00**	√	C184T34DB9	85	230/460	T-Stat	17.5 - 23.4	1.00	15.44	S, MX
10 - 15	3600	215TZ	**140641.00**	√	C215T34DB3	95	220/440	T-Stat	26.0 - 40.0	1.50	17.41	S, MX

Note: 230/460 Volt motors are suitable for use at 208 Volts 60HZ at 1.0 Service factor.

Single Phase - TEFC - Rigid Base

HP	SYN RPM 60 Hz	NEMA Frame	Catalogue Number	Availability	Model Number	App. Wgt. (lbs)	Voltage	Over-load Prot.	F. L. Amps @ 230V	Service Factor	"C" Dim. (Inches)	♥Notes
7 1/2	1800	215TZ	**141348.00**	D	C215K17FZ76A	157	230	Man.	30.5	1.15	21.72	S, MX, 53
7 1/2	1800	215TZ	**141437.00**	√	C215K17FZ15A	160	230	Man.	30.5	1.15	22.0	S, MX, 53
10	1800	215TZ	**141311.00**	√	C215K17FB73	192	230	Man.	40.0	1.15	21.72	S, MX, 53

D - Item to be discontinued once inventory is depleted.

Specially designed for crop dryer applications having vibration dampening centrifugal switch.

♥ Note listing on inside back flap.
Specifications are subject to change without notice.

NEMA is a trademark of National Electrical Manufacturers Association and is not owned or controlled by Regal Beloit Corporation.

LEESON®

Agricultural Duty Motors
Grain Dryer / Centrifugal Fan Motor

NEW!

Three Phase - TEAO - Rigid Base

HP	SYN RPM 60 Hz	NEMA® Frame	Catalogue Number	Availability	Model Number	App. Wgt. (lbs)	Voltage	Over-load Prot.	F. L. Amps @ 230V	Service Factor	"C" Dim. (Inches)	♥Notes
5 - 7	3600	184TZ	**132393.00**	√	C184T34NB3	100	230/460	T-Stat	16.5	1.00	15.38	S, MX
7.5 - 10.5	3600	184TZ	**132394.00**	√	C184T34NB4	107	230/460	T-Stat	24.8	1.00	17.38	S, MX

Note: 230/460 Volt motors are suitable for use at 208 Volts 60HZ at 1.0 Service factor.

NEW!

Single Phase - 230 Volts - TEAO - Rigid Base

HP	SYN RPM 60 Hz	NEMA Frame	Catalogue Number	Availability	Model Number	App. Wgt. (lbs)	Voltage	Over-load Prot.	F. L. Amps @ 230V	Service Factor	"C" Dim. (Inches)	♥Notes
3-4.5	3600	145TZ	**122122.00**	√	C145K34NB6	50	230	T-Stat	18.3 ♠	1.00	14.46	S, US, 53
5-7	3600	182TZ	**132391.00**	√	C182K34NB106	102	230	T-Stat	28.6 ♠	1.00	17.44	S, MX, 53
7.5-10	3600	182TZ	**132392.00**	√	C182K34NB107	108	230	T-Stat	38.0 ♠	1.00	17.44	S, MX, 53
10-15	3600	215TZ	**141220.00**	√	C215K34NB73	136	230	T-Stat	68.5 ♠	1.50	18.17	S, MX

♠ amp listing is at higher HP.

♥ Note listing on inside back flap.
Specifications are subject to change without notice.

Agricultural Duty Motors
Tobacco Barn Motors

Used in tobacco barns and other applications that require a fan motor in a high ambient condition.

Features:

- Drip-proof airover designs
- Class H insulation for high ambient conditions
- 80° C ambient rated
- 120 inch leads
- Oversized double sealed bearings
- 1/4-20 tapped hole at end of shaft

Single Phase - DPAO - Rigid Base

HP	SYN RPM 60 Hz	NEMA Frame	Catalogue Number	Availability	Model Number	App. Wgt. (lbs)	Voltage	F. L. Amps @ 230V	Service Factor	"C" Dim. (Inches)	♥Notes
7 1/2	1800	215TVZ	**140830.00**	√	215TBDW17041	125	230	34.5	1.15	18.04	S, MX, 53
10	1800	215TVZ	**140816.00**	√	C215K17DB13	150	230	44.0	1.15	20.65	S, US, 53

♥ Note listing on inside back flap.
Specifications are subject to change without notice.

NEMA is a trademark of National Electrical Manufacturers Association and is not owned or controlled by Regal Beloit Corporation.

Agricultural Duty Motors

Milk Transfer Pump Motor

Features:

- Replacements for SURGE™* milk pumps
- Washguard® motor features for high pressure washdown applications
- Epoxy painted and stainless ratings available for corrosion protection
- Capacitor supplied loose with motor 113939.00
- Motors 119227.00 & 119231.00 are capacitor start -induction run motors
- Solid state encapsulated starting switch on capacitor start motors
- Three phase motor is inverter rated

Single Phase - C Face With Base - TENV / TEFC

HP	SYN RPM 60 Hz	NEMA® Frame	Catalogue Number	Availability	Model Number	App. Wgt. (lbs)	Voltage	F. L. Amps @ 230V	Service Factor	"C" Dim. (Inches)	♥Notes
1/2	3600	56CZ	**113939.00**	√	C6P34NK5	42	230	4.5	SPEC	13.48	S, US, 12
1	3600	56CZ	**119227.00**	√	C6C34NK28B	33	115/230	6.0	1.15	14.48	S, US, 12
1	3600	56CZ	**119448.00**	√	C6C34WK29	33	115/230	6.0	1.15	13.04	S, US, 13

Note 12: TENV
Note 13: TEFC

♥ Note listing on inside back flap.
Specifications are subject to change without notice.

Stainless - Milk Transfer Pump Motor

Single Phase - TENV - 230 Volts - C Face With Base

HP	SYN RPM 60 Hz	NEMA Frame	Catalogue Number	Availability	Model Number	App. Wgt. (lbs)	Voltage	F. L. Amps @ 230V	Service Factor	"C" Dim. (Inches)	♥Notes
1	3600	56HCZ	**119231.00**	√	CZ6C34VK4	49	115/208-230	6.0	1.15	14.86	S, US

♥ Note listing on inside back flap.
Specifications are subject to change without notice.

Three Phase Milk Transfer Pump Motor

Three Phase - TENV - C Face With Base

HP	SYN RPM 60 Hz	NEMA Frame	Catalogue Number	Availability	Model Number	App. Wgt. (lbs)	Voltage	F. L. Amps @ 230V	Service Factor	"C" Dim. (Inches)	♥Notes
1	3600	56CZ	**119232.00**	√	C6T34VK23	26	230/460	2.6	1.15	12.73	S, US

Green items are premium efficient.

♥ Note listing on inside back flap.
Specifications are subject to change without notice.

*SURGE is believed to be the trademark or trade name of GEA Farm Technologies, Inc. and is not owned or controlled by Regal Beloit Corporation.

NEMA is a trademark of National Electrical Manufacturers Association and is not owned or controlled by Regal Beloit Corporation.

Agricultural Duty Motors

Feed-Auger Drive Motors - Dust Tight

Replacement motors for poultry feed auger drive systems

Features:

- Mechanical switch has over-speed protection - Note 51
- Manual overload protected

Single Phase - TEFC - 60 Hertz

HP	SYN RPM 60 Hz	NEMA® Frame	Catalogue Number	Availability	Model Number	App. Wgt. (lbs)	Voltage	Over-load Prot.	F. L. Amps @ 230V	Service Factor	"C" Dim. (Inches)	♥Notes
1/3	1800	56YZ	**117887.00**	√	117887.00	21	115/208-230	Man.	2.9	1.00	12.00	S, MX, 26, 51, 64
1/2	1800	56YZ	**117888.00**	√	117888.00	22	115/208-230	Man.	4.2	1.25	12.00	S, MX, 26, 51, 64
3/4	1800	56YZ	**117889.00**	√	117889.00	31	115/208-230	Man.	4.2	1.25	13.13	S, MX, 26, 51, 64
1	1800	56YZ	**117883.00**	√	117883.00	40	115/208-230	Man.	5.4	1.00	14.51	S, MX, 27, 51, 64
1 1/2	1800	56YZ	**117884.00**	√	117884.00	44	115/208-230	Man.	7.3	1.15	14.51	S, MX, 27, 51,53, 64

Note 64: Stub shaft on ODE for manual jogging.

♥ Note listing on inside back flap.
Specifications are subject to change without notice.

NEMA is a trademark of National Electrical Manufacturers Association and is not owned or controlled by Regal Beloit Corporation.

Agricultural Duty Motors

Pedestal Fan Motors

Features:

- Totally enclosed airover fan motors for air circulators where motor is mounted directly to fan column
- Energy efficient, permanent split capacitor type design eliminates the centrifugal switch for "three phase" reliability
- Totally enclosed ball bearing design for commercial and industrial environments
- Automatic thermal overload protection, reversible
- Heavy gauge steel yoke is welded to the motor frame
- Four mounting studs are extended 1/2" on 5.14" bolt circle for mounting of fan shroud

Single Phase - Rigid Base - TEAO

HP	SYN RPM 60 Hz	NEMA® Frame	Catalogue Number	Availability	Model Number	App. Wgt. (lbs)	Voltage	Over-load Prot.	F. L. Amps @ 230V	Service Factor	"C" Dim. (Inches)	♥Notes
1/4	1625	48YZ	**A099731.00**	C/A	A4P17NZ104A	23	115-208/230	Auto.	1.35	1.0	10.65	S, MX
1/3	1625	48YZ	**A099732.00**	C/A	A4P17NZ105A	17	115-208/230	Auto.	1.6	1.0	10.90	S, MX
1/3	1625	48YZ	**A099729.00***	√	A4P17NZ103A	26	115	Auto.	3.15	1.0	12.04	S, MX
1/2	1625	48YZ	**A099733.00**	√	A4P17NZ98A	26	115-208/230	Auto.	2.7	1.0	11.15	S, MX
1/2	1625	48YZ	**A099730.00***	√	A4P17NZ137A	27	115	Auto.	4.3	1.0	12.54	S, MX

C/A - Check Availability.
* With switch, cord, plug and F.L. AMPS @ 115V.

♥ Note listing on inside back flap.
Specifications are subject to change without notice.

Stainless Steel Pedestal Fan Motors
Extended Thru-bolts
Auto Reset Protectors
TEAO designs

Single-Phase - PSC Type - TEAO - 115/230 Volts - Yoke Mount

HP	SYN RPM 60 Hz	NEMA Frame	Catalogue Number	Availability	Model Number	App. Wgt. (lbs)	Voltage	F. L. Amps @ 230V	Service Factor	"C" Dim. (Inches)	Shaft Dia.	♥Notes
1/4	1725	48YZ	**191543.00**	√	A4P17VZ1A	20	115/230	1.3	1.0	11.58	.50	S, CN
1/4	1140	48YZ	**191544.00**	√	A6P11VZ1A	20	115/230	1.5	1.0	11.58	.50	S, CN
1/3	1725	48YZ	**191545.00**	√	A4P17VZ2A	21	115/230	1.5	1.0	11.58	.50	S, CN
1/3	1140	48YZ	**191546.00**	√	A6P11VZ2A	22	115/230	2.0	1.0	11.58	.50	S, CN
1/2	1725	48YZ	**191547.00**	√	A4P17VZ3A	24	115/230	2.6	1.0	11.58	.50	S, CN
1/2	1140	48YZ	**191548.00**	√	A6P11VZ3A	28	115/230	2.7	1.0	12.56	.50	S, CN

♥ Note listing on inside back flap.
Specifications are subject to change without notice.

NEMA is a trademark of National Electrical Manufacturers Association and is not owned or controlled by Regal Beloit Corporation.

LEESON®

PERFORMA+PRO™

Single Phase - TEAO - Rigid Base - Extended Thru-Bolts

HP	SYN RPM 60 Hz	NEMA® Frame	Catalogue Number	Availability	Model Number	App. Wgt. (lbs)	Voltage	Over-load Prot.	F. L. Amps @ 230V	Service Factor	Shaft Length	♥Notes
1/4	1625	48YZ	**P099899.00**	√	L4P17NB80A	18	115/208-230	Auto.	1.3	1.0	2.5	S, MX
1/4	1060	48YZ	**P099460.00**	√	L4P11NZ96A	21	115/208-230	Auto.	1.5	1.0	2.5	S, MX
1/4	1625	48YZ	**P099909.00^**	√	L4P17NZ158A	18	115/208-230	Auto	1.3	1.0	2.5	S, MX
1/3	1625	48YZ	**P099900.00**	√	L4P17NZ153A	19	115/208-230	Auto.	1.6	1.0	2.5	S, MX
1/3	1060	48YZ	**P099461.00**	√	L4P11NZ95A	22	115/208-230	Auto.	1.8	1.0	2.5	S, MX
1/3	1625	48YZ	**P099910.00^**	√	A4P17NZ152A	19	115/208-230	Auto	1.6	1.0	2.5	S, MX
1/2	1625	48YZ	**P099901.00**	√	L4P17NZ154A	22	115/208-230	Auto.	2.6	1.0	2.5	S, MX
1/2	1060	48YZ	**P099462.00**	√	L4P11NZ94A	25	115/208-230	Auto.	2.8	1.0	2.5	S, MX
1/2	1625	48YZ	**P099911.00^**	√	L4P17NZ155A	22	115/208-230	Auto	2.6	1.0	2.5	S, MX

^ Requires Mounting bracket ARM12FP.

♥ Note listing on inside back flap.
Specifications are subject to change without notice.

Description	Catalogue Number
^ Mounting bracket kit/with hardware ARM12FP	**ARM12FP**

Features:

- **THREE-ARM REPLACEMENT MOTORS** These Performa+Pro motors are designed for easy and economical replacement of other popular three-arm fan motors. The ARM12FP has three arms and mounting hardware. By simply cutting the arms to length you can cover many different fan and housing sizes.

Agricultural Duty Motors

Agricultural Fan Motors - Belt Drive - TEAO

High-Efficiency - Single-Phase

HP	SYN RPM 60 Hz	NEMA Frame	Catalogue Number	Availability	Model Number	App. Wgt. (lbs)	Voltage	Over-load Prot.	F. L. Amps @ 230V	Service Factor	"C" Dim. (Inches)	♥Notes
1/2	1725	56Z	**A009580.00**	√	A6K17NB30	27	115/208-230	Auto.	2.3	1.00	11.44	S, MX, 53
3/4	1725	56	**A009581.00**	√	A6K17NB29	30	115/208-230	Auto.	3.3	1.00	11.44	S, MX, 53
1	1725	56H	**A009782.00**	√	A6K17NB33	37	115/208-230	Auto.	4.0	1.25	12.44	S, MX, 53
1 1/2	1725	56H	**A009594.00**	√	A6K17NB32	39	115/208-230	Auto.	5.8	1.00	11.94	S, MX, 53
2	1725	145T	**A009595.00**	√	A145K17NB2	47	230	Auto.	9.2	1.00	13.49	S, MX, 53 *

* Side mounted conduit box.

♥ Note listing on inside back flap.
Specifications are subject to change without notice.

NEMA is a trademark of National Electrical Manufacturers Association and is not owned or controlled by Regal Beloit Corporation.

HVAC – Fan Motors

- Various voltages and mounting types available
- Single and three phase fan duty motors
- Rigid base, resilient base, pedestal base, belly band mount and extended thru-bolt mount types
- Drip-proof, TEFC, TEAO and DPAO designs
- General purpose duty
- Agricultural duty
- UL recognized and CSA certified

Applications:
Ideally suited for a variety of fan applications requiring the motor to either be mounted in or out of the air stream for proper ventilation. Some motors have an epoxy finish for harsh applications and other motors have a baked on enamel finish. Industrial, commercial and agricultural fan motors available.

HVAC - Fan Motors

Resilient Base Motors - Single Phase

Fan & Blower Service - Moderate Starting Torque

General Specifications:

- Drip-proof and totally enclosed designs
- Industrial quality, resilient (cradle) mounted
- Capacitor start-type
- Ball bearing designs
- Moderate starting torque to reduce machinery stresses
- Suitable for belt-driven fans or fan-on-shaft applications

Drip-Proof – Single Phase – Resilient Base

HP	SYN RPM 60 Hz	NEMA® Frame	Catalogue Number	Availability	Model Number	App. Wgt. (lbs)	Voltage	Over-load Prot.	F. L. Amps @ 230V	Service Factor	"C" Dim. (Inches)	♥Notes
1/4	3600	48	**101434.00**	√	A4C34DR8	19	115/208-230	Auto.	2.0	1.00	9.39	S, MX
1/4	3600	48	**E101434.00**	√	A4K34DR4	19	115/208-230	Auto.	1.2	1.00	10.39	S, MX, 53
1/4	1800	48	**100109.00**	√	A4C17DR1	17	115/208-230	Auto.	2.7	1.35	9.89	S, MX
1/4	1800	48	**E100109.00**	√	A4K17DR18	16	115/208-230	Auto.	1.2	1.35	11.14	S, MX, 53
1/4	1800	48	**100111.00**	√	A4C17DR3	17	115/208-230	Auto.	2.7	1.00	9.89	S, MX
1/4	1800	48	**E100111.00**	√	A4K17DR17	15	115/208-230	Auto.	1.2	1.00	11.14	S, MX, 53
1/4	1800	48	**102963.00**	√	A4C17DR47	17	277	Auto.	2.2*	1.35	9.89	S, MX
1/3	3600	48	**101431.00**	√	A4C34DR11	20	115/208-230	Auto.	2.3	1.00	9.39	S, MX
1/3	3600	48	**E101431.00**	√	A4K34DR1	20	115/208-230	Auto.	1.5	1.00	11.14	S, MX, 53
1/3	1800	48	**100110.00**	√	A4C17DR2	21	115/208-230	Auto.	3.3	1.35	9.89	S, MX
1/3	1800	48	**E100110.00**	√	A4K17DR19	21	115/208-230	Auto.	1.9	1.35	10.34	S, MX, 53
1/3	1800	48	**101015.00**	√	A4C17DR31	18	115/208-230	Auto.	3.3	1.00	9.89	S, MX
1/3	1800	48	**E101015.00**	√	A4K17DR20	21	115/208-230	Auto.	1.9	1.00	11.31	S, MX, 53
1/3	1800	S56	**E100014.00**	√	C4K17DJ9	20	115/208-230	None	1.9	1.35	11.81	S, MX, 53
1/3	1800	S56	**100010.00**	√	A4C17DJ2	18	115/208-230	Auto.	3.3	1.35	10.31	S, MX
1/3	1800	S56	**E100010.00**	√	A4K17DJ11	18	115/208-230	Auto.	1.9	1.35	11.81	S, MX, 53
1/3	1800	S56	**100063.00**	√	A4C17DJ9	22	115/208-230	Auto.	3.3	1.00	10.31	S, MX
1/3	1800	S56	**E100063.00**	√	A4K17DJ12	22	115/208-230	Auto.	1.9	1.00	11.81	S, MX, 53
1/3	1800	S56	**102964.00**	√	A4C17DJ72	18	277	Auto.	2.8*	1.35	10.31	S, MX
1/2	3600	48	**101432.00**	√	A4C34DR10	23	115/208-230	Auto.	3.4	1.00	9.89	S, MX
1/2	3600	48	**E101432.00**	√	A4K34DR2	23	115/208-230	Auto.	2.2	1.00	11.39	S, MX, 53
1/2	1800	S56	**100015.00**	√	C4C17DJ6	24	115/208-230	None	4.4	1.25	10.81	S, MX
1/2	1800	S56	**E100015.00**	√	C4K17DJ10	25	115/208-230	None	2.3	1.25	12.31	S, MX, 53
1/2	1800	S56	**100045.00**	√	M4C17DJ17	20	115/208-230	Man.	4.4	1.00	10.81	S, MX
1/2	1800	S56	**E100045.00**	√	M4K17DJ13	24	115/208-230	Man.	2.3	1.00	12.31	S, MX, 53
1/2	1800	S56	**101611.00**	√	A4C17DJ57	25	115/208-230	Auto.	4.4	1.25	10.81	S, MX, 32
1/2	1800	S56	**E101611.00**	√	A4K17DJ14	25	115/208-230	Auto.	2.3	1.25	12.31	S, MX, 32, 53
1/2	1800	S56	**100011.00**	√	A4C17DJ3	25	115/208-230	Auto.	4.4	1.25	10.81	S, MX
1/2	1800	S56	**E100011.00**	√	A4K17DJ13	25	115/208-230	Auto.	2.3	1.25	12.31	S, MX, 53
1/2	1800	S56	**100064.00**	√	A4C17DJ10	24	115/208-230	Auto.	4.4	1.00	10.81	S, MX
1/2	1800	S56	**E100064.00**	√	A4K17DJ79	24	115/208-230	Auto.	2.3	1.00	12.31	S, MX, 53
1/2	1800	S56	**102965.00**	√	A4C17DJ74	22	277	Auto.	3.7*	1.25	10.81	S, MX

Green items are premium efficient.

* F.L. Amps at 277V.

♥ Note listing on inside back flap.
Specifications are subject to change without notice.

NEMA is a trademark of National Electrical Manufacturers Association and is not owned or controlled by Regal Beloit Corporation.

HVAC - Fan Motors

Resilient Base Motors - Single Phase

Fan & Blower Service - Moderate Starting Torque

Drip-Proof – Single Phase – Resilient Base

HP	SYN RPM 60 Hz	NEMA® Frame	Catalogue Number	Availability	Model Number	App. Wgt. (lbs)	Voltage	Over-load Prot.	F. L. Amps @ 230V	Service Factor	"C" Dim. (Inches)	♥Notes
3/4	3600	48	**101433.00**	√	A4C34DR9	25	115/208-230	Auto.	4.8	1.00	10.39	S, MX
3/4	3600	48	**E101433.00**	√	A4K34DR3	25	115/208-230	Auto.	3.6	1.00	11.89	S, MX, 53
3/4	3600	S56	**100603.00**	√	A4C34DJ7	28	115/208-230	Auto.	4.9	1.25	11.31	S, MX
3/4	3600	S56	**E100603.00**	√	A4K34DJ1	28	115/208-230	Auto.	3.6	1.25	12.31	S, MX, 53
3/4	1800	56	**E119362.00**	√	C6K17DR44	40	115/208-230	None	3.3	1.25	13.21	S, MX, 53
3/4	1800	S56	**100046.00**	√	M4C17DJ18	29	115/208-230	Man.	5.4	1.25	11.81	S, MX
3/4	1800	56	**E119858.00**	√	M56B17DRS70C0TA3A	29	115/208-230	Man.	3.2	1.25	12.54	S, MX, 53
3/4	1800	S56	**100047.00**	√	M4C17DJ19	27	115/208-230	Man.	5.5	1.00	11.81	S, MX
3/4	1800	56	**E119859.00**	√	M56B17DRS70006A3A	27	115/208-230	Man.	3.2	1.25	12.54	S, MX, 53
3/4	1800	S56	**101839.00**	√	A4C17DJ67	25	115/208-230	Auto.	5.4	1.25	11.81	S, MX, 32
3/4	1800	56	**E119864.00**	√	A56B17DRS70003A3A	25	115/208-230	Auto.	3.2	1.25	12.54	S, MX, 53
3/4	1800	S56	**100012.00**	√	A4C17DJ4	29	115/208-230	Auto.	5.4	1.25	11.81	S, MX
3/4	1800	56	**E119856.00**	√	A56B17DRS70004A3A	39	115/208-230	Auto.	3.2	1.25	12.54	S, MX, 53
3/4	1800	S56	**100065.00**	√	A4C17DJ11	25	115/208-230	Auto.	5.5	1.00	11.81	S, MX
3/4	1800	56	**E119860.00**	√	A56B17DRS70005A3A	38	115/208-230	Auto.	3.2	1.25	12.54	S, MX, 53
3/4	1800	S56	**102966.00**	√	A4C17DJ73	26	277	Auto.	4.5*	1.25	11.81	S, MX
1	3600	56H	**110478.00**	√	A6C34DR6	31	115/208-230	Auto.	6.0	1.25	11.85	S, US, 6
1	3600	56H	**E110478.00**	√	A6K34DR6	36	115/208-230	Auto.	3.9	1.25	12.82	S, US, 6, 53
1	1800	56H	**E113027.00**	√	C6K17DR43	31	115/208-230	None	4.2	1.15	12.88	S, US, 6, 53
1	1800	56H	**110007.00**	√	A6C17DR1	32	115/208-230	Auto.	6.4	1.15	11.81	S, US, 6
1	1800	56	**E110007.00**	√	A6K17DR50	35	115/208-230	Auto.	4.2	1.15	12.82	S, US, 6, 53
1	1800	56H	**110054.00**	√	A6C17DR2	35	115/208-230	Auto.	6.4	1.00	11.81	S, US, 6
1	1800	56H	**E110054.00**	√	A6K17DR49	35	115/208-230	Auto.	4.2	1.00	12.82	S, US, 6, 53
1	1800	56H	**116599.00**	√	A6C17DR54	32	277	Auto.	5.4*	1.20	11.82	S, US, 6
1 1/2	3600	56H	**110479.00**	√	A6C34DR7	33	115/208-230	Auto.	8.2	1.15	11.82	S, US, 6
1 1/2	3600	56H	**E110479.00**	√	A6K34DR7	33	115/208-230	Auto.	6.1	1.15	13.32	S, US, 6, 53
1 1/2	1800	56H	**110579.00**	√	A6K17DR6	41	115/208-230	Auto.	7.2	1.15	12.82	S, US, 6, 53
1 1/2	1800	56H	**E110579.00**	√	U6K17DR48	41	115/208-230	Auto.	6.5	1.15	13.82	S, US, 6, 53
1 1/2	1800	56H	**116600.00**	√	A6K17DR41	41	277	Auto	6.0*	1.15	12.82	S, US, 6, 53
2	3600	56H	**113633.00**	√	U6C34DR21	41	115/208-230	Auto.	10.0	1.15	12.82	S, US, 6, 53
2	3600	56H	**E113633.00**	√	U6K34DR8	41	115/208-230	Auto.	8.0	1.15	12.82	S, US, 6, 53
2	1800	56H	**113608.00**	√	A6K17DR28	45	115/208-230	Auto.	9.2	1.15	13.81	S, US, 6, 53
2	1800	56H	**E113608.00**	√	U56B17DRS70010A3A	45	115/208-230	Auto.	8.0	1.15	14.43	S, US, 6, 53
2	1800	56H	**116601.00**	√	A6K17DR42	48	277	Auto.	8.7*	1.15	13.82	S, US, 6, 53

Green items are premium efficient.

* F.L. Amps at 277V.

♥ Note listing on inside back flap.
Specifications are subject to change without notice.

NEMA is a trademark of National Electrical Manufacturers Association and is not owned or controlled by Regal Beloit Corporation.

HVAC – Fan Motors

Single Phase - TEFC - Resilient Base

Features:

- Industrial quality, resilient (cradle) mounted
- High starting torque
- Automatic overload protected
- Suitable for belt-driven fans or fan-on-shaft applications

Single Phase - TEFC - Resilient Base

HP	RPM 60 Hz	NEMA® Frame	Catalogue Number	Availability	Model Number	App. Wgt. (lbs)	Voltage	Over-load Prot.	F. L. Amps @ 230 V	Service Factor	"C" Dim. (Inches)	♥Notes
1/2	1725	56H	**110025.00**	√	A6C17FR1	29	115/208-230	Auto.	4.4	1.15	11.96	S, US, 6
3/4	1725	56H	**110026.00**	√	A6C17FR2	31	115/208-230	Auto.	5.4	1.15	12.46	S, US, 6
1	1725	56H	**111915.00**	√	A6C17FR10	34	115/208-230	Auto.	6.4	1.15	12.96	S, US, 6

♥ Note listing on inside back flap.
Specifications are subject to change without notice.

Wattsaver® Premium Efficiency Fan Motors

Features:

- Premium efficient
- Class F insulation
- Terminal boards
- Automatic overload protected

Single Phase - Drip-Proof - Resilient Base

HP	RPM 60 Hz	NEMA Frame	Catalogue Number	Availability	Model Number	App. Wgt. (lbs)	Voltage	Over-load Prot.	F. L. Amps @ 115 V	Service Factor	% F.L. Eff.	"C" Dim. (Inches)	♥Notes
1/4	1800	48	**101602.00**	√	A4K17DR7	22	115	Auto.	2.5	1.35	71.0	10.39	S, MX, 32, 55
1/4	1800	48	**A090602.00**	√	A4K17DR14A	18	115	Auto.	2.35	1.35	71.1	10.39	S, MX, 32,55
1/3	1800	48	**101405.00**	√	A4K17DR5	22	115	Auto.	3.2	1.35	75.0	10.39	S, MX, 32
1/3	1800	48	**A090405.00**	√	A4K17DR15A	19	115	Auto.	3.2	1.35	74.5	10.39	S, MX, 32,55
1/2	1800	48	**101585.00**	√	A4K17DR6	25	115	Auto.	4.6	1.35	76.0	11.39	S, MX, 32
1/2	1800	48	**A090585.00**	√	A4K17DR13A	24	115	Auto.	5	1.35	75.5	12.14	S, MX, 32,53

Green items are premium efficient.

♥ Note listing on inside back flap.
Specifications are subject to change without notice.

NEMA is a trademark of National Electrical Manufacturers Association and is not owned or controlled by Regal Beloit Corporation.

HVAC - Fan Motors

Resilient Base Motors - Three Phase
Fan & Blower Service

General Specifications:

- Industrial quality, resilient (cradle) mounted
- Ball bearing design
- Moderate starting torque to reduce fan stresses
- Suitable for belt-driven fans or fan-on-shaft applications

Three Phase - TEFC/TENV - Resilient Base 230/460 Volts

HP	RPM 60 Hz	NEMA® Frame	Catalogue Number	Availability	Model Number	App. Wgt. (lbs)	Voltage	Over-load Prot.	F. L. Amps @ 230V	Service Factor	% F.L. EFF.	"C" Dim. (Inches)	♥Notes
1/2	1725	56H	**111917.00**	√	C6T17NR1	28	230/460	None	1.8	1.15	78.5	11.31	S, US, 6, 12
1	1725	56H	**119419.00**	√	C6T17FR3	38	230/460	None	3.2	1.15	85.5	13.84	S, US, 6, 13

Note 12: TENV Note 13: TEFC

Drip-Proof - Three Phase - Resilient Base 230/460 Volts

HP	SYN RPM 60 Hz	NEMA Frame	Catalogue Number	Availability	Model Number	App. Wgt. (lbs)	Voltage	Over-load Prot.	F. L. Amps @ 230V	Service Factor	% F.L. EFF.	"C" Dim. (Inches)	♥Notes
1/3	3450	S56	**101639.00**	√	A4T34DJ4D	17	230/460	Auto.	1.4	1.35	61	10.31	S, US, 33
1/3	3450	S56	**E101639.00**	√	A4T34DJ4DA	20	230/460	Auto.	1.4	1.35	69.5	11.25	S, MX, 33
1/3	1725	S56H	**E100210.00**	√	C4T17DJ25	19	230/460	None	1.2	1.35	73.4	12.31	S, MX, 6
1/3	1725	S56	**101520.00**	√	A4T17DJ18	19	230/460	Auto.	1.6	1.35	64.3	10.81	S, MX, 33
1/3	1725	S56H	**E101520.00**	√	A4T17DJ26	17	230/460	Auto.	1.2	1.35	73.4	12.31	S, MX, 33, 6
1/2	3450	S56	**101640.00**	√	A4T34DJ3	18	230/460	Auto.	1.8	1.25	69.0	10.31	S, US, 33
1/2	3450	S56	**E101640.00**	C/A	————	—	230/460	Auto.	—	—	73.4	—	S, US, 33
1/2	1725	56	**E119360.00**	√	C6T17DR40	23	230/460	T-Stats	2.0	1.25	78.2	10.82	S, US
1/2	1725	S56	**100796.00**	√	A4T17DJ10	22	230/460	Auto.	2.0	1.25	68.0	11.31	S, MX
1/2	1725	56	**E119879.00**	√	56T17DRS70001A3A	25	230/460	Auto.	1.8	1.25	78.2	11.54	S, MX, 33
3/4	3450	S56	**E101773.00**	√	C4T34DJ8	20	230/460	T-Stats	2.4	1.25	76.8	10.81	S, US
3/4	3450	S56	**101641.00**	√	A4T34DJ5	20	230/460	Auto.	2.4	1.25	79.0	10.81	S, US, 33
3/4	3450	S56	**E101641.00**	√	A4T34DJ5	20	230/460	Auto.	2.4	1.25	79.0	10.81	S, US, 33
3/4	1725	56	**E119361.00**	√	C6T17DR41	26	230/460	T-Stats	2.4	1.25	81.1	11.82	S, US
3/4	1725	S56	**100908.00**	√	A4T17DJ13	26	230/460	Auto.	2.8	1.25	75.0	11.81	S, MX, 33
3/4	1725	56	**E119880.00**	√	56T17DRS70002A3A	29	230/460	Auto.	2.6	1.25	81.1	12.04	S, MX, 33
1	3450	56	**E114192.00**	√	C6T34DR41A	24	230/460	T-Stats	3.2	1.25	77.0	10.82	S, US
1	3450	56	**113895.00**	√	A6T34DR30	25	230/460	Auto.	3.2	1.25	77.0	10.82	S, US, 33
1	3450	56	**E113895.00**	C/A	A6T34DR44	25	230/460	Auto.	3.2	1.25	77.0	10.82	S, US, 33
1	1725	56H	**E110052.00**	√	C6T17DR37	24	230/460	T-Stats	3.2	1.15	83.5	13.32	S, US, 6
1	1725	56H	**111311.00**	√	A6T17DR11	27	230/460	Auto.	4.2	1.15	78.5	11.31	S, US, 6, 33
1	1725	56H	**E111311.00**	√	A6T17DR63	30	230/460	Auto.	3.2	1.15	83.5	13.82	S, US, 6, 33
1 1/2	3450	56H	**E114194.00**	C/A	C6T34DR40A	31	230/460	T-Stats	4.0	1.15	84.0	12.82	S, US, 6
1 1/2	3450	56H	**113896.00**	√	A6T34DR31	29	230/460	Auto.	4.2	1.15	81.5	11.82	S, US, 6, 33
1 1/2	3450	56H	**E113896.00**	√	U6T34DR43	32	230/460	Auto.	4.0	1.15	84.0	12.32	S, US, 6, 33
1 1/2	1725	56H	**E110433.00**	√	C6T17DR38	33	230/460	T-Stats	4.8	1.15	86.5	13.82	S, US, 6
1 1/2	1725	56H	**113846.00**	√	A6T17DR25	29	230/460	Auto.	5.6	1.15	78.5	11.81	S, US, 6, 33
1 1/2	1725	56H	**E113846.00**	√	A6T17DR47	32	230/460	Auto.	4.8	1.15	86.5	14.32	S, US, 6, 33
2	3450	56H	**E114196.00**	√	C6T34DR38	37	230/460	T-Stats	4.8	1.15	85.5	13.82	S, US, 6
2	3450	56H	**113897.00**	√	A6T34DR32	39	230/460	Auto.	5.6	1.15	82.9	12.32	S, US, 6, 33
2	3450	56H	**E113897.00**	√	U6T34DR42A	42	230/460	Auto.	4.8	1.15	85.5	14.32	S, US, 6, 33
2	1725	56H	**E114197.00**	√	C6T17DR39	38	230/460	T-Stats	5.8	1.15	86.5	14.32	S, US, 6
2	1725	56H	**113847.00**	√	A6T17DR26	34	230/460	Auto.	6.2	1.15	78.5	12.31	S, US, 6, 33
2	1725	56H	**E113847.00**	√	A6T17DR48	36	230/460	Auto.	5.8	1.15	86.5	15.32	S, US, 6, 33
3	3450	56HZ	**113926.00**	√	U6T34DR33	40	230/460	Auto.	7.6	1.00	84.0	13.19	S, US, 6, 33
3	1725	56HZ	**116593.00**	√	A6T17DR33	47	230/460	Auto.	8.6	1.15	82.5	14.19	S, US, 33,6 5

Green items are premium efficient.

C/A - Check Availability.

Note: 230/460 Volt motors are suitable for use at 208 Volts 60HZ at 1.0 Service factor.

♥ Note listing on inside back flap.
Specifications are subject to change without notice.

NEMA is a trademark of National Electrical Manufacturers Association and is not owned or controlled by Regal Beloit Corporation.

Drip-Proof - Three Phase - Resilient Base - 575 Volts

HP	RPM 60 Hz	NEMA® Frame	Catalogue Number	Availability	Model Number	App. Wgt. (lbs)	Voltage	Over-load Prot.	F. L. Amps @ 575 V	Service Factor	% F.L. Eff.	"C" Dim. (Inches)	♥Notes
1/2	1800	S56	**100828.00**	√	C4T17DJ11C	25	575	None	0.9	1.25	68	10.81	S, MX
1/2	1800	56	**E100828.00**	√	56T17DRS70006A3A	30	575	None	0.8	1.25	78.2	11.45	S, MX
3/4	1800	S56	**100829.00**	√	C4T17DJ12C	26	575	None	1.2	1.25	75	11.31	S, MX
3/4	1800	56	**E100829.00**	√	56T17DRS70005A3A	33	575	None	1.1	1.25	78.2	11.95	S, MX
1	1800	56	**111393.00**	√	C6T17DR13D	28	575	None	1.7	1.15	78.5	11.31	S, US
1	1800	56H	**E111393.00**	√	C6T17DR49A	37	575	None	1.2	1.15	84	12.82	S, US, 6

Green items are premium efficient.

♥ Note listing on inside back flap.
Specifications are subject to change without notice.

NEMA is a trademark of National Electrical Manufacturers Association and is not owned or controlled by Regal Beloit Corporation.

HVAC – Fan Motors

Fan & Blower Motors

Multi-Speed - Single & Three Phase

Features:

- Variable torque
- PSC Type for shaft mounted fan applications
- Overload protected with a UL and CSA recognized automatic reset protector
- Listed speed or two speed operation using the proper auxiliary switch - reference drawing 005210.01
- Variable speed by using a variable voltage control
- Must be mounted in airstream for proper motor cooling
- Extended through-bolts
- Epoxy painted motors

Single Phase - TEAO - PSC Type - Resilient Base

HP	RPM 60 Hz	NEMA® Frame	Catalogue Number	Availability	Model Number	App. Wgt. (lbs)	Voltage	Over-load Prot.	F. L. Amps @ 230 V	Service Factor	"C" Dim. (Inches)	♥Notes
1/4	1625	48YZ	**100803.00**	√	A4P17NR1	23	115/208-230	Auto.	1.4	1.00	10.66	S, MX, 16, 34
1/4	1075	48YZ	**100824.00**	√	A4P11NR2	23	115/208-230	Auto.	1.4	1.00	10.66	S, MX, 16, 34
1/4	1075	S56YZ	**100805.00**	√	A4P11NJ1	25	115/208-230	Auto.	1.4	1.00	11.06	S, MX, 17, 34
1/3	1625	48YZ	**100804.00**	√	A4P17NR2	21	115/208-230	Auto.	1.6	1.00	10.66	S, MX, 16, 34
1/3	1625	S56Y	**100767.00**	√	A4P17NJ1	25	115/208-230	Auto.	1.6	1.00	10.31	S, MX, 34
1/3	1625	56HYZ	**111348.00**	√	A6P17NZ6	28	115/208-230	Auto.	1.7	1.00	12.94	S, US, 59
1/3	1075	48YZ	**100825.00**	√	A4P11NR3	32	115/208-230	Auto.	1.8	1.00	11.16	S, MX, 16, 34
1/3	1075	56HYZ	**100806.00**	√	A4P11NJ2	30	115/208-230	Auto.	1.8	1.00	11.56	S, MX, 17, 34
1/2	1625	56HZ	**111323.00**	√	A6P17NR3	33	115/208-230	Auto.	2.6	1.00	12.56	S, US, 17, 34
1/2	1625	S56Y	**100768.00**	√	A4P17NJ2	39	115/208-230	Auto.	2.2	1.00	10.81	S, MX, 34
1/2	1075	48YZ	**101645.00**	√	A4P11NR6	33	115/208-230	Auto.	2.8	1.00	11.16	S, MX, 16, 34
1/2	1075	56HYZ	**111321.00**	√	A6P11NR1	37	115/208-230	Auto.	3.0	1.00	13.56	S, US, 17, 34
1/2	825	56HYZ	**111919.00**	√	A6P8NR2	43	115/208-230	Auto.	3.2	1.00	13.56	S, US, 17, 34, 50
3/4	1625	56HYZ	**111324.00**	√	A6P17NR4	37	115/208-230	Auto.	3.5	1.00	13.06	S, US, 17, 34
3/4	1625	56H	**111266.00**	√	A6P17NR1	39	115/208-230	Auto.	3.5	1.00	12.31	S, US, 34
3/4	1075	56HYZ	**111322.00**	√	A6P11NR2	47	115/208-230	Auto.	4.0	1.00	14.10	S, US, 17, 34, 50
1	1625	56H	**111267.00**	√	A6P17NR2	39	115/208-230	Auto.	4.4	1.00	12.81	S, US, 34

♥ Note listing on inside back flap.
Specifications are subject to change without notice.

Single Phase - TEAO - PSC Type - Rigid Base

HP	RPM 60 Hz	NEMA Frame	Catalogue Number	Availability	Model Number	App. Wgt. (lbs)	Voltage	Over-load Prot.	F. L. Amps @ 230 V	Service Factor	"C" Dim. (Inches)	♥Notes
1/4	1625	48YZ	**100699.00**	√	A4P17NB7	19	115/208-230	Auto.	1.4	1.00	10.65	S, MX, 34
1/4	1750	48YZ	**101252.00**	√	A4P17NB27	14	115/208-230	Auto.	1.5	1.00	10.40	S, MX, 34, 50
1/3	1625	48YZ	**100700.00**	√	A4P17NB8	24	115/208-230	Auto.	1.6	1.00	10.65	S, MX, 34
1/3	1625	56YZ	**111202.00**	C/A	A6P17NZ1	30	115/208-230	Auto.	1.7	1.00	12.00	S, US, 34, 62
1/3	1750	48YZ	**101253.00**	√	A4P17NB28	25	115/208-230	Auto.	1.9	1.00	10.65	S, MX, 34, 50
1/3	1140	S56Z	**100604.00**	√	A4P11NH1	26	115/208-230	Auto.	1.8	1.00	11.40	S, MX, 34
1/2	1625	48YZ	**100701.00**	√	A4P17NB9	25	115/208-230	Auto.	2.5	1.00	12.15	S, MX, 34
1/2	1750	S56YZ	**101176.00***	√	A4K17NH2	18	115/208-230	Auto.	3.5	1.00	10.40	S, MX, 34, 50, 54

*Motor 101176 must be mounted within the airflow of the fan.
C/A - Check Availability.

♥ Note listing on inside back flap.
Specifications are subject to change without notice.

NEMA is a trademark of National Electrical Manufacturers Association and is not owned or controlled by Regal Beloit Corporation.

LEESON®

HVAC - Fan Motors

Two-Speed - Two-Winding - Variable Torque

Features:

- Belted or fan-on-shaft applications
- Can be mounted within or outside the fan's airstream
- Resilient mounted for quiet operation
- 3/4 HP and larger single phase are capacitor start motors; smaller single phase are split phase start
- Ball bearings

Single Phase - Drip-Proof - Resilient Base

HP	RPM 60 Hz	NEMA® Frame	Catalogue Number	Availability	Model Number	App. Wgt. (lbs)	Voltage	F. L. Amps High/Low	Service Factor	"C" Dim. (Inches)	♥Notes
1/4-1/10	1800/1200	48YZ	**101020.00**	√	C4S46DR1	23	115	4.6-3.4	1.00	11.18	S, US, 16, 34
1/3-0.15	1800/1200	S56H	**101021.00**	√	C4S46DJ1	29	115	5.0-4.6	1.00	12.27	S, MX, 6
1/2-1/4	1800/1200	56H	**111953.00**	√	C6S46DR1	36	115	7.8-4.6	1.00	12.31	S, US, 6
1/2-1/4	1800/1200	56H	**113643.00**	√	C6S46DR2	36	230	3.9-2.3	1.00	12.31	S, US, 6
3/4-1/3	1800/1200	56H	**111954.00**	√	C6C46DR2	41	115	11.6-7.4	1.00	12.81	S, US, 6
3/4-1/3	1800/1200	56H	**113672.00**	√	C6C46DR5	42	230	5.8-3.7	1.15	12.81	S, US, 6, 53
1-0.44	1800/1200	56H	**111955.00**	√	C6K46DR1	44	115	13.2-9.5	1.00	12.81	S, US, 6, 53
1-0.44	1800/1200	56H	**113373.00**	√	C6K46DR3	42	230	6.5-4.6	1.00	12.81	S, US, 6, 53

♥ Note listing on inside back flap.
Specifications are subject to change without notice.

Three Phase - Drip-Proof - Resilient Base

HP	RPM 60 Hz	NEMA Frame	Catalogue Number	Availability	Model Number	App. Wgt. (lbs)	Voltage	F. L. Amps High/Low	Service Factor	"C" Dim. (Inches)	♥Notes
1/2-.22	1800/1200	56H	**111956.00**	√	C6T46DR1	32	230	1.8-1.1	1.00	12.31	S, US
1/2-.22	1800/1200	56H	**111957.00**	C/A	C6T46DR2	32	460	0.9-0.5	1.00	12.31	S, US
3/4-1/3	1800/1200	56H	**111958.00**	√	C6T46DR3	36	230	2.8-1.6	1.00	13.82	S, US, 6
3/4-1/3	1800/1200	56H	**111959.00**	C/A	C6T46DR4	36	460	1.4-0.8	1.00	12.81	S, US, 6
1-0.44	1800/1200	56H	**111960.00**	√	C6T46DR5	40	230	4.0-2.4	1.00	12.81	S, US, 6
1-0.44	1800/1200	56H	**111961.00**	√	C6T46DR6	40	460	1.8-1.0	1.00	12.81	S, US, 6
11/2-.67	1800/1200	56H	**111962.00**	√	C6T46DR7	40	230	5.0-2.6	1.00	12.81	S, US, 6
11/2-.67	1800/1200	56H	**111963.00**	√	C6T46DR8	40	460	2.5-1.3	1.00	12.81	S, US, 6

C/A - Check Availability.
Note: 230/460 Volt motors are suitable for use at 208 Volts 60HZ at 1.0 Service factor.

♥ Note listing on inside back flap.
Specifications are subject to change without notice.

NEMA is a trademark of National Electrical Manufacturers Association and is not owned or controlled by Regal Beloit Corporation.

HVAC – Fan Motors

Aeration Fan Motors

Totally Enclosed Air Over Motors (TEAO)

Features:

- Suitable for shaft mounted fans
- Capacitor start designs
- Designed to run in the airflow of the driven fan
- Epoxy enamel finish to resist corrosion
- Ball bearing designs

Single Phase - Capacitor Start - TEAO - Rigid Base

HP	RPM 60 Hz	NEMA® Frame	Catalogue Number	Availability	Model Number	App. Wgt. (lbs)	Voltage	F. L. Amps @ 230 V	Service Factor	"C" Dim. (Inches)	♥Notes
3/4	3450	56Z	**111332.00**	√	C6C34NB15	30	115/208-230	5.0	1.00	10.90	S, US, 22
1	3450	56Z	**111333.00**	√	C6C34NB16	32	115/208-230	6.0	1.00	10.90	S, US, 22
1 1/2	3450	56Z	**111949.00**	√	C6C34NB19	35	115/208-230	8.5	1.00	11.40	S, US, 22
1 1/2	3450	143TZ	**120374.00**	√	C143C34NB1	34	115/208-230	8.5	1.00	11.84	S, US, 23
2	3450	145TZ	**120375.00**	√	C145C34NB1	44	230	10.0	1.00	12.84	S, US, 23
3	3450	145T	**120376.00**	√	C145K34NB1	48	230	12.8	1.00	13.84	S, US, 53

♥ Note listing on inside back flap.
Specifications are subject to change without notice.

Three Phase - TEAO - Rigid Base

HP	RPM 60 Hz	NEMA Frame	Catalogue Number	Availability	Model Number	App. Wgt. (lbs)	Voltage	F. L. Amps @ 230 V	F.L. EFF.	Service Factor	"C" Dim. (Inches)	♥Notes
3/4	3450	56Z	**111334.00**	√	C6T34NB18	24	230/460	2.4	75.5	1.00	9.90	S, US, 22
1	3450	56Z	**111335.00**	√	C6T34NB19	28	230/460	3.2	77.0	1.00	9.90	S, US, 22
1 1/2	3450	143TZ	**120377.00**	√	C143T34NB2	34	230/460	4.2	82.5	1.00	11.34	S, US, 23
2	3450	145TZ	**120378.00**	√	C145T34NB1	34	230/460	5.6	82.5	1.00	11.84	S, US, 23
3	3450	145T	**120379.00**	√	C145T34NB2	41	230/460	7.6	84.0	1.00	12.34	S, US, 23

Note: 230/460 Volt motors are suitable for use at 208 Volts 60HZ at 1.0 Service factor.

♥ Note listing on inside back flap.
Specifications are subject to change without notice.

NEMA is a trademark of National Electrical Manufacturers Association and is not owned or controlled by Regal Beloit Corporation.

LEESON®

HVAC – Fan Motors

Ventilation Fan Motor - Dust-Tight - Shaft Mounted

Features:

- Permanent split capacitor motors
- Direct drive exhaust ventilation fans
- Extended thru-bolt designs
- Built in terminal panel for quick connections
- Motors must be mounted in the mounted fans airstream

Single Phase - PSC Type - TEAO - Thru-Bolt Mount

HP	RPM 60 Hz	NEMA® Frame	Catalogue Number	Availability	Model Number	App. Wgt. (lbs)	Voltage	Over-load Prot.	F. L. Amps @ 230 V	Service Factor	"C" Dim. (Inches)	♥Notes
1/3	1625	48YZ	**103783.00**	√	A4P17NZ132	22	115/208-230	Auto	1.7	1.00	10.93	S, MX, 34
1/2	1625	48YZ	**103782.00**	√	A4P17NZ131	22	115/208-230	Auto	2.7	1.00	11.18	S, MX, 34
1/2	825	56YZ	**114620.00**	√	A6P8NZ2	38	115/208-230	Auto	3.2	1.00	12.63	S, US, 34, 50
1/2	825	48YZ	**A099250.00**	√	A4P8NZ17	24	115/208-230	Auto	3.0	1.15	10.80	S, MX, 20, 34, 50

♥ Note listing on inside back flap.
Specifications are subject to change without notice.

Single Phase - PSC Type - TEAO - C Face Less Base

HP	RPM 60 Hz	NEMA Frame	Catalogue Number	Availability	Model Number	App. Wgt. (lbs)	Voltage	Over-load Prot.	F. L. Amps @ 230 V	Service Factor	"C" Dim. (Inches)	♥Notes
1/2	850	S56C	**M099251.00**	D	A4P8NC2	24	115/208-230	Auto	3.0	1.00	10.40	S, CN, 25
1/2	825	S56C	**A099251.00**	√	A4P8NC3	24	115/208-230	Auto	3.0	1.15	10.05	S, MX
1	850	56CZ	**A009644.00**	√	A6P8NC7	47	230	Auto	5.2	1.15	13.44	S, MX, 21, 50

D - Item to be discontinued once inventory is depleted.

♥ Note listing on inside back flap.
Specifications are subject to change without notice.

Three Phase - TEAO - C Face Less Base

HP	RPM 60 Hz	NEMA Frame	Catalogue Number	Availability	Model Number	App. Wgt. (lbs)	Voltage	Over-load Prot.	F. L. Amps @ 230 V	Service Factor	"C" Dim. (Inches)	♥Notes
1/2	850	56C	**116201.00**	√	C6T8NC37	29	230/460	None	3.0	1.00	10.90	S, US
1	850	56C	**116202.00**	√	C6T8NC38	45	230/460	None	5.0	1.00	12.90	S, US

Note: 230/460 Volt motors are suitable for use at 208 Volts 60HZ at 1.0 Service factor.

♥ Note listing on inside back flap.
Specifications are subject to change without notice.

NEMA is a trademark of National Electrical Manufacturers Association and is not owned or controlled by Regal Beloit Corporation.

HVAC – Fan Motors

Fan & Blower Motors

Single Phase - Commercial Duty

Designed for continuous duty use in ventilation fans, blowers and other belt driven or fan-on-shaft applications.

Features:

- Split phase design motors
- Belt driven or fan-on-shaft applications
- Resilient base for quiet operation
- Automatic overload protection
- Built-in terminal panel for easy connection

Single Phase - Drip-Proof - Resilient Base

HP	RPM 60 Hz	NEMA® Frame	Catalogue Number	Availability	Model Number	App. Wgt. (lbs)	Voltage	Over-load Prot.	F.L. Amps @ 230V	Service Factor	"C" Dim. (Inches)	♥Notes
1/4	1725	48Z	**103797.00**	√	A4S17DR71	9	115/208-230	Auto.	2.6	1.35	9.93	S, MX, 32
1/3	1725	48Z	**103795.00**	√	A4S17DR69	17	115/208-230	Auto.	2.8	1.35	10.18	S, MX, 32
1/2	1725	48Z	**103796.00**	√	A4S17DR70	17	115/208-230	Auto.	3.5	1.25	10.43	S, MX, 32

♥ Note listing on inside back flap.

Residential / Industrial - Split Phase - Belted Fan Motors

Designed for use in air conditioners, roof ventilators and exhaust fans.

Features:

- Low starting torque
- Ball bearings
- Resilient "cradle" style base
- Automatic overload protection

Single Phase - Split Phase - Drip-Proof - Resilient Base

HP	RPM 60 Hz	NEMA Frame	Catalogue Number	Availability	Model Number	App. Wgt. (lbs)	Voltage	Over-load Prot.	F.L. Amps @ 115 V	Service Factor	"C" Dim. (Inches)	♥Notes
1/4	1725	48Z	**M900195.00**	√	48S17D1301	13	115	Auto.	5.0	1.35	9.72	S, MX, 7
1/3-1/9	1725/1140	56H	**M900277.00**	√	56S17D7208	15	115	Auto.	5.3/2.9	1.35	10.78	S, MX
1/3	1725	48Z	**M900196.00**	√	48S17D1303	15	115	Auto.	6.1	1.35	9.72	S, MX, 7
1/2-1/6	1725/1140	56H	**M900599.00**	C/A	56S17D5710	30	115	Auto.	8.4/4.5	1.25	11.85	S, US
1/2	1725	48Z	**M900197.00**	√	48S17D1302	20	115	Auto.	7.2	1.25	10.72	S, MX, 7

Note 7: Includes sleeve to convert shaft to 5/8 inch.
C/A - Check Availability.

♥ Note listing on inside back flap.

Premium Efficiency - Industrial / Residential - Belted Fan Motors

Designed for use in residential or industrial belted fan applications.

Features:

- High efficiency designs
- Ball bearings
- Special balanced rotors
- Spade connectors on terminal board
- Automatic overload protection
- Drop-in replacement for most standard belted-fan motors
- Extremely quiet running compared to standard fan motors
- Consumes approximately half the power of a standard fan motor

Single Phase - Drip-Proof - Resilient Base

HP	RPM 60 Hz	NEMA Frame	Catalogue Number	Availability	Model Number	App. Wgt. (lbs)	Voltage	Over-load Prot.	F.L. Amps @ 115 V	Service Factor	"C" Dim. (Inches)	♥Notes
1/4	1725	48	**A090602.00**	√	A4K17DR14	18	115	Auto.	2.4	1.35	10.39	S, MX, 32, 55
1/3	1725	48	**A090405.00**	√	A4K17DR15	19	115	Auto.	3.2	1.35	10.39	S, MX, 32, 55
1/2	1725	48	**A090585.00**	√	A4K17DR13	24	115	Auto.	5.0	1.35	12.14	S, MX, 32, 53

♥ Note listing on inside back flap.
Specifications are subject to change without notice.

NEMA is a trademark of National Electrical Manufacturers Association and is not owned or controlled by Regal Beloit Corporation.

HVAC - Fan Motors

Two-Speed Motors

Three Phase - Variable and Constant Torque

Variable torque motors are typically used on applications such as fans, blowers and centrifugal pumps.

Constant torque motors are typically used on mixers, compressors, conveyors, extractors, feeders and laundry machinery.

Constant horsepower motors are typically used on machine tools such as drills, lathes, punch presses and milling machines.

Features:

- Two-speed, single winding designs
- Totally enclosed fan cooled designs
- Ball bearing designs
- Single voltage designs

Variable Torque - 460 Volts - Three Phase - One Winding - TEFC - Rigid Base

HP	RPM 60 Hz	NEMA® Frame	Catalogue Number	Availability	Model Number	App. Wgt. (lbs)	Voltage	F.L. Amps @ 460V	Service Factor	"C" Dim. (Inches)	♥Notes
1/.25	1800/900	143T	**120945.00**	C/A	C143T48FB7	39	460	1.6–0.7	1.00	12.43	S, US
1.5/.37	1800/900	145T	**120941.00**	√	C145T48FB60	39	460	2.4–1.0	1.00	12.43	S, US
2/.5	1800/900	145T	**120940.00**	C/A	C145T48FB48	39	460	3.2–1.3	1.00	12.43	S, US
3/.75	1800/900	184T	**131474.00**	C/A	C184T48FB67	80	460	4.0–1.8	1.00	14.46	S, MX
5/1.2	1800/900	184T	**131475.00**	√	C184T48FB68	98	460	6.5–2.5	1.00	15.96	S, MX
7.5/1.9	1800/900	215T	**140447.00**	√	C215T48FB46	158	460	9.7–3.3	1.00	17.71	S, MX
10/2.5	1800/900	215T	**140448.00**	√	C215T48FB48	171	460	12.7–4.2	1.00	18.71	S, MX

C/A - Check Availability.

♥ Note listing on inside back flap.
Specifications are subject to change without notice.

Variable Torque - 208-230 Volts - Three Phase - One Winding - TEFC - Rigid Base

HP	RPM 60 Hz	NEMA Frame	Catalogue Number	Availability	Model Number	App. Wgt. (lbs)	Voltage	F.L. Amps @ 230V	Service Factor	"C" Dim. (Inches)	♥Notes
1/.25	1800/900	143T	**120944.00**	C/A	C143T48FB6	39	208-230	3.2–1.4	1.00	12.43	S, US
1.5/.37	1800/900	145T	**120947.00**	C/A	C145T48FB61	39	208-230	4.8–2.0	1.00	12.43	S, US
2/.5	1800/900	145T	**120946.00**	√	C145T48FB59	39	208-230	6.3–2.6	1.00	12.43	S, US
3/.75	1800/900	184T	**131468.00**	√	C184T48FB61	81	208-230	8.0–3.6	1.00	14.46	S, MX
5/1.2	1800/900	184T	**131469.00**	√	C184T48FB62	97	208-230	13.0–5.0	1.00	15.96	S, MX
7.5/1.9	1800/900	215T	**140443.00**	C/A	C215T48FB45	157	208-230	19.4–6.6	1.00	17.71	S, MX
10/2.5	1800/900	215T	**140444.00**	C/A	C215T48FB47	169	208-230	25.4–8.4	1.00	18.71	S, MX

C/A - Check Availability.

♥ Note listing on inside back flap.
Specifications are subject to change without notice.

Variable Torque - 575 Volts - Three Phase - One Winding - TEFC - Rigid Base

HP	RPM 60 Hz	NEMA Frame	Catalogue Number	Availability	Model Number	App. Wgt. (lbs)	Voltage	F.L. Amps @ 575 V	Service Factor	"C" Dim. (Inches)	♥Notes
2/.5	1800/900	145T	**121312.00**	√	C145T48FB62C	39	575	2.6–1.1	1.00	12.75	S, US
3/.75	1800/900	184T	**131667.00**	√	C184T48FB70C	75	575	3.2–1.5	1.00	14.88	S, MX
5/1.2	1800/900	184T	**131668.00**	√	C184T48FB69C	92	575	5.2–2.0	1.00	15.96	S, MX

♥ Note listing on inside back flap.
Specifications are subject to change without notice.

NEMA is a trademark of National Electrical Manufacturers Association and is not owned or controlled by Regal Beloit Corporation.

HVAC – Fan Motors

Fan & Blower Motors - Multi-Speed - Three Phase

Constant Torque - 460 Volts - Three Phase - One Winding - TEFC - Rigid Base

HP	RPM 60 Hz	NEMA® Frame	Catalogue Number	Availability	Model Number	App. Wgt. (lbs)	Voltage	F.L. Amps @ 460V	Service Factor	"C" Dim. (Inches)	♥Notes
1/.5	1800/900	143T	**120943.00**	C/A	C143T48FB9	39	460	1.4–1.6	1.00	12.93	S, US
2/1	1800/900	184T	**131471.00**	√	C184T48FB64	71	460	2.9–2.9	1.00	13.96	S, MX
3/1.5	1800/900	184T	**131470.00**	√	C184T48FB63	83	460	3.8–3.5	1.00	14.96	S, MX
5/2.5	1800/900	215T	**140445.00**	C/A	C215T48FB43	148	460	6.7–7.0	1.00	17.71	S, MX

C/A - Check Availability.

♥ Note listing on inside back flap.
Specifications are subject to change without notice.

Constant Torque - 208-230 Volts - Three Phase - One Winding - TEFC - Rigid Base

HP	RPM 60 Hz	NEMA Frame	Catalogue Number	Availability	Model Number	App. Wgt. (lbs)	Voltage	F.L. Amps @ 230V	Service Factor	"C" Dim. (Inches)	♥Notes
1/.5	1800/900	143T	**120942.00**	C/A	C143T48FB8	40	208-230	3.2–4.2	1.00	12.93	S, US
2/1	1800/900	184T	**131473.00**	C/A	C184T48FB66	72	208-230	5.8–5.7	1.00	13.96	S, MX
3/1.5	1800/900	184T	**131472.00**	√	C184T48FB65	83	208-230	7.6–6.9	1.00	14.96	S, MX
5/2.5	1800/900	215T	**140446.00**	C/A	C215T48FB44	140	208-230	13.4–14.0	1.00	17.71	S, MX

C/A - Check Availability.

♥ Note listing on inside back flap.
Specifications are subject to change without notice.

TORQUE

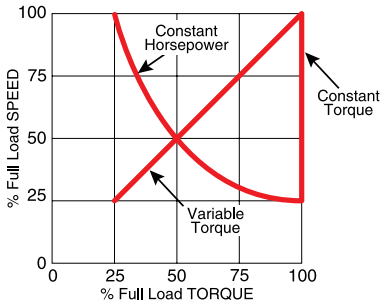

HORSEPOWER

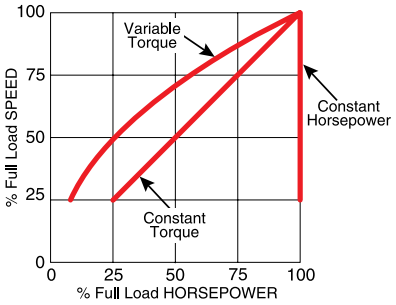

NEMA is a trademark of National Electrical Manufacturers Association and is not owned or controlled by Regal Beloit Corporation.

Custom *PDQ*

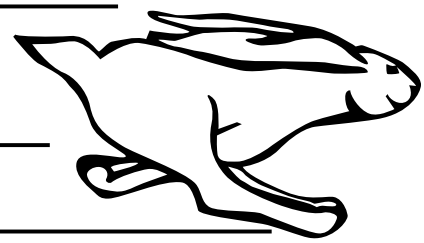

PDQ Modular Production Program

Custom Multi-Speed, Low Speed and Modified Motors, one or several at a time, on a quick turnaround basis.

The LEESON® brand "Modular Production" utilizes specially designed and standard components to make almost any imaginable NEMA® frame multi-speed or low-speed motor available when you need it.

Quick Turnaround-LEESON brand Custom PDQ can provide quick answers to inquiries and fast turnaround for orders of highly customized motors.

Comprehensive Catalog - Features the Industry's most extensive two-speed and low speed motor selection as well as a listing of commonly requested modifications. Call for your copy of the LEESON brand Catalog 1057 - Multi-Speed, Low-Speed and Modified Motors.

Full Fact Acknowledgement - With Custom PDQ all custom motors are promptly and fully acknowledged upon receipt of order. The acknowledgement includes the complete motor specification pricing and shipping date.

Motors of 254T frame and larger are of cast iron construction with all the rugged features of the LEESON brand stock single-speed motors described on pages 30 & 31 of this catalog. All two-speed designs are class F insulated and have a 1.15 S.F.

Whether for the everyday or not-so-everyday needs, Custom PDQ gives you the ability to say "Yes" to requests for customized motors.

Multi-speed
Two, three and four-speed motors
Low Speed
900, 720, 600, 450 and 300 rpm

Modified as per Catalog 1057 - Some examples are:

- Anti-condensation heaters
- Brakemotors, custom
- Cooling tower specifications
- Downsized frames
- Epoxy and fungus proofing
- 50 Hz
- Premium-efficiency, North American manufacture
- Insulation, special
- Marine duty (below deck)
- Part winding (low and high voltages)
- Shafts, modified
- Thermostats
- Thermistors
- Washdown service
- IEEE841 conversion of WATTSAVER® motors
- Voltages (non-standard)

…and many more

NEMA is a trademark of National Electrical Manufacturers Association and is not owned or controlled by Regal Beloit Corporation.

50 HZ Motors

General Purpose - Totally Enclosed & Drip Proof
Rolled Steel Frame

- Class B insulation systems – 42, 48 and 56 frames
- Class F insulation system – 140 frame and higher
- Shielded ball bearings for direct coupled applications. Contact your local sales office for belted load applications
- Rolled steel frame material designs
- Continuous duty
- Torques exceed NEMA® performance standards
- UL recognized and CSA certified

Applications:
For use where special frequency is required. Ideally suited for use on pumps, compressors, fans, blowers, conveyors, machine tools and other industrial applications.

NEMA is a trademark of National Electrical Manufacturers Association and is not owned or controlled by Regal Beloit Corporation.

Special Voltage Motors

50 Hertz Motors - Single Phase - Rigid Base

General Specifications:

50 Hz single phase designs produce full rated HP on 50 Hz power supply. Designed for general purpose applications.

Features:

- High efficiency energy saving designs
- Centrifugal switch designed for 50 Hz service
- High torque

Single Phase - Drip-Proof - Rigid Base - IP22

HP	RPM 50 Hz	NEMA® Frame	Catalogue Number	Availability	Model Number	App. Wgt. (lbs)	Voltage	Over-Load Prot.	F.L. Amps @ 220V	Service Factor	"C" Dim. (Inches)	♥Notes
1/3	1500	56	**110394.00**	√	C6C14DB5	22	110/220	None	3.2	1.35	9.88	S, US
1/2	3000	56	**113901.00**	√	C6C28DB24	25	110/220	None	3.8	1.25	10.34	S, US
1/2	1500	56	**110395.00**	√	C6C14DB6	25	110/220	None	4.1	1.25	10.38	S, US
3/4	3000	56	**113902.00**	C/A	C6C28DB25	27	110/220	None	5.6	1.25	10.34	S, US
3/4	1500	56	**110396.00**	√	C6C14DB7	30	110/220	None	5.9	1.25	10.88	S, US
1	3000	56	**113903.00**	√	C6C28DB26	31	110/220	None	6.6	1.25	10.84	S, US
1	1500	56H	**110397.00**	√	C6C14DB8	35	110/220	None	6.4	1.15	11.88	S, US, 6
1 1/2	3000	56H	**113904.00**	√	C6C28DB27	37	110/220	None	8.6	1.15	11.84	S, US
1 1/2	1500	56H	**110398.00**	√	C6K14DB1	43	110/220	None	8.4	1.15	12.35	S, US, 6, 53
2	3000	56H	**113905.00**	√	C6C28DB28	42	110/220	None	10.7	1.15	12.34	S, US
2	1500	182T	**131553.00**	C/A	C182C14DB3	70	220	None	11.8	1.15	13.69	S, US
3	3000	56H	**113937.00**	√	C6K28DB5	47	220	None	12.4	1.15	12.84	S, US
3	1500	184T	**131554.00**	√	C184C14DB2	80	220	None	16.8	1.15	14.69	S, MX
5	1500	184T	**131555.00**	√	C184K14DB9	95	220	None	23.2	1.15	15.69	S, MX, 53

C/A - Check Availability.

♥ Note listing on inside back flap.
Specifications are subject to change without notice.

NEMA is a trademark of National Electrical Manufacturers Association and is not owned or controlled by Regal Beloit Corporation.

Special Voltage Motors

50 Hertz Motors - Single Phase - Rigid Base

Single Phase - TEFC - Rigid Base - IP54

HP	RPM 50 Hz	NEMA® Frame	Catalogue Number	Availability	Model Number	App. Wgt. (lbs)	Voltage	Over-load Prot.	F.L. Amps @ 220V	Service Factor	"C" Dim. (Inches)	♥Notes
1/3	3000	56	**113916.00**	√	C6C28FB25	25	110/220	None	3.2	1.00	10.81	S, US
1/3	1500	56	**110423.00**	√	C6C14FB6	24	110/220	None	3.2	1.00	10.81	S, US
1/3	1500	56	**113908.00**	√	M6C14FB22	26	110/220	Man.	3.2	1.00	10.81	S, US
1/2	3000	56	**113917.00**	√	C6C28FB26	27	110/220	None	3.8	1.00	11.31	S, US
1/2	1500	56	**110064.00**	√	C6C14FB1	25	110/220	None	4.1	1.00	11.31	S, US
1/2	1500	56	**113909.00**	√	M6C14FB23	29	110/220	Man.	4.1	1.15	11.31	S, US
3/4	3000	56	**113918.00**	√	C6C28FB27	29	110/220	None	5.6	1.00	11.31	S, US
3/4	1500	56	**110065.00**	√	C6C14FB2	32	110/220	None	5.9	1.00	11.81	S, US
3/4	1500	56	**113910.00**	√	M6C14FB24	32	110/220	Man.	5.9	1.00	11.81	S, US
1	3000	56	**113919.00**	√	C6C28FB28	32	110/220	None	6.6	1.00	11.81	S, US
1	1500	56H	**110066.00**	√	C6C14FB3	38	110/220	None	6.4	1.00	12.81	S, US, 6, 53
1	1500	56	**113911.00**	√	M6C14FB25	34	110/220	Man.	6.4	1.00	12.31	S, US
1 1/2	3000	56H	**113920.00**	√	C6C28FB29	44	110/220	None	8.0	1.00	13.31	S, US
1 1/2	1500	56H	**110424.00**	√	C6K14FB1	47	110/220	None	8.6	1.00	13.31	S, US, 6, 53
1 1/2	1500	56H	**113929.00**	√	P6K14FB9	49	110/220	Man.	8.6	1.00	13.31	S, US, 6, 53
2	3000	56HZ	**113928.00**	√	C6C28FB24	44	110/220	None	10.7	1.00	13.76	S, US, 3
2	1500	182T	**131556.00**	√	C182C14FB6	95	220	None	11.2	1.00	15.96	S, MX
2	1500	182T	**131600.00**	C/A	P182C14FB5	71	220	Man.	12.0	1.00	14.96	S, MX
3	3000	145T	**121070.00**	√	C145K28FB6	50	220	None	12.4	1.00	12.84	S, US, 53
3	3000	56H	**113936.00**	√	C6K28FB2	48	220	None	12.4	1.00	13.81	S, US, 53
3	1500	184T	**131557.00**	√	C184C14FB6	98	220	None	15.9	1.00	16.96	S, MX
3	1500	184T	**131601.00**	√	P184C14FB7	98	220	Man.	15.9	1.00	16.96	S, MX
5	3000	184T	**131638.00**	√	C184K28FB2	98	220	None	20.5	1.00	17.46	S, MX, 53
5	1500	184T	**131578.00**	√	C184K14FB5	103	220	None	21.0	1.00	17.46	S, MX, 53
5	1500	213T	**140475.00**	C/A	P213K14FB1	163	220	Man.	24.5	1.00	18.71	S, MX, 53

C/A - Check Availability.

♥ Note listing on inside back flap.
Specifications are subject to change without notice.

50 Hertz Motors - Single Phase

Single Phase - Drip-Proof - Resilient Base - IP22

HP	RPM 50 Hz	NEMA Frame	Catalogue Number	Availability	Model Number	App. Wgt. (lbs)	Voltage	Over-load Prot.	F.L. Amps @ 220V	Service Factor	"C" Dim. (Inches)	♥Notes
1/3	3000	56	**114222.00**	√	C6C28DR1	24	110/220	None	3.2	1.35	10.82	S, US
1/3	1500	56	**114223.00**	C/A	C6C14DR18	24	110/220	None	3.2	1.35	10.81	S, US
1/2	3000	56	**114224.00**	C/A	C6C28DR2	26	110/220	None	3.8	1.25	11.32	S, US
1/2	1500	56	**114225.00**	√	C6C14DR19	27	110/220	None	4.1	1.25	11.31	S, US
3/4	3000	56	**114226.00**	√	C6C28DR3	28	110/220	None	5.6	1.25	11.32	S, US
3/4	1500	56	**114227.00**	√	C6C14DR16	31	110/220	None	5.9	1.25	11.81	S, US
1	3000	56	**114228.00**	C/A	C6C28DR4	31	110/220	None	6.6	1.25	11.82	S, US
1	1500	56	**114229.00**	C/A	C6C14DR17	35	110/220	None	6.4	1.15	12.31	S, US
1 1/2	1500	56H	**114231.00**	√	C6K14DR12	42	110/220	None	8.4	1.15	13.32	S, US, 53
2	1500	56H	**114233.00**	√	C6K14DR13	49	220	None	9.6	1.15	13.82	S, US

C/A - Check Availability.

♥ Note listing on inside back flap.
Specifications are subject to change without notice.

NEMA is a trademark of National Electrical Manufacturers Association and is not owned or controlled by Regal Beloit Corporation.

LEESON®

Single Phase - TEFC - C Face Less Base - IP54

HP	RPM 50 Hz	NEMA® Frame	Catalogue Number	Availability	Model Number	App. Wgt. (lbs)	Voltage	Over-load Prot.	F.L. Amps @ 220V	Service Factor	"C" Dim. (Inches)	♥Notes
1/3	1500	56C	**113921.00**	√	M6C14FC5	22	110/220	Man.	3.2	1.00	10.81	S, US
1/2	3000	56C	**113912.00**	√	C6C28FC3	25	110/220	None	3.8	1.00	11.31	S, US
1/2	1500	56C	**113922.00**	√	M6C14FC6	29	110/220	Man.	4.1	1.15	11.31	S, US
3/4	3000	56C	**113913.00**	√	C6C28FC4	28	110/220	None	5.6	1.00	11.31	S, US
3/4	1500	56C	**113923.00**	√	M6C14FC7	31	110/220	Man.	5.9	1.00	11.81	S, US
1	3000	56C	**113914.00**	√	C6C28FC5	32	110/220	None	6.6	1.00	11.81	S, US
1	1500	56C	**113924.00**	√	M6C14FC8	34	110/220	Man.	6.4	1.00	12.31	S, US
1 1/2	3000	56C	**113915.00**	√	C6C28FC6	43	110/220	None	8.0	1.00	13.31	S, US
1 1/2	1500	56C	**113925.00**	√	P6K14FC4	42	110/220	Man.	8.6	1.00	13.31	S, US, 53
2	3000	145TC	**120990.00**	√	C145K28FC2	47	110/220	None	8.6	1.15	13.75	S, US, 53
2	1500	182TC	**131599.00**	C/A	P182C14FC2	70	220	Man.	12.0	1.00	14.97	S, MX

C/A - Check Availability.

♥ Note listing on inside back flap.
Specifications are subject to change without notice.

50 Hertz Motors - Three Phase

General Specifications:

Totally enclosed fan cooled 12-lead motors designed specifically for 50 Hz service. These motors are intended for equipment built in North America and destined for use in 50 Hz service areas of the world.

Features:

- Suitable for 220/380 volt, 50 Hz, or 440 volt, 50 Hz, three phase power
- Torques exceed NEMA® performance for Design B motors
- Construction meets IP 54 protection standards
- Class F insulation

Three Phase - TEFC - Rigid Base - IP54

KW/HP	RPM 50 Hz	NEMA Frame	Catalogue Number	Availability	Model Number	App. Wgt. (lbs)	Voltage	F.L. Amps @ 380V	% F.L. Eff.	Service Factor	"C" Dim. (Inches)	♥Notes
0.18/1/4	1500	48	**102685.00**	√	C4T14FB4	19	220/380/440	1.0	56.0	1.15	9.06	S, MX
0.25/1/3	3000	48	**102686.00**	√	C4T28FB2	19	220/380/440	0.8	60.0	1.15	9.93	S, US
0.25/1/3	1500	48	**102688.00**	√	C4T14FB5	19	220/380/440	1.1	65.0	1.15	9.31	S, MX
0.25/1/3	1500	S56	**102183.00**	√	C4T14FH1	19	220/380/440	1.1	65.0	1.15	9.69	S, MX
0.37/1/2	3000	48	**102690.00**	C/A	C4T28FB1	20	220/380/440	1.0	69.0	1.15	10.43	S, US
0.37/1/2	1500	48	**102692.00**	√	C4T14FB3	20	220/380/440	1.4	72.0	1.15	9.81	S, MX
0.37/1/2	1500	S56	**102693.00**	√	C4T14FH2	20	220/380/440	1.4	72.0	1.15	10.19	S, MX
0.37/1/2	1500	56	**114304.00**	√	C6T14NB1	25	220/380/440	1.0	78.0	1.15	10.38	S, US, 12
0.55/3/4	3000	56	**114306.00**	C/A	C6T28FB4	24	220/380/440	1.8	72.0	1.15	10.81	S, US
0.55/3/4	1500	56	**114307.00**	√	C6T14FB7	27	220/380/440	1.9	74.0	1.15	11.31	S, US

C/A - Check Availability.
Note 12: TENV

♥ Note listing on inside back flap.
Specifications are subject to change without notice.

NEMA is a trademark of National Electrical Manufacturers Association and is not owned or controlled by Regal Beloit Corporation.

Special Voltage Motors

50 Hertz Motors - Three Phase

Three Phase - TEFC - C Face Less Base - IP54 Enclosure Protection

KW/HP	RPM 50 Hz	NEMA® Frame	Catalogue Number	Availability	Model Number	App. Wgt. (lbs)	Voltage	F.L. Amps @ 380V	% F.L. Eff.	Service Factor	"C" Dim. (Inches)	♥Notes
0.18/1/4	1500	S56C	**102184.00**	√	C4T14FC2	18	220/380/440	1.0	56.0	1.15	9.44	S, MX
0.25/1/3	3000	S56C	**102687.00**	√	C4T28FC2	19	220/380/440	0.8	60.0	1.15	10.31	S, US
0.25/1/3	1500	S56C	**102689.00**	√	C4T14FC4	19	220/380/440	1.1	65.0	1.15	9.69	S, MX
0.25/1/3	1500	56C	**114889.00**	√	C6T14FC5	18	220/380/440	1.1	68.0	1.15	10.31	S, US
0.37/1/2	3000	S56C	**102691.00**	√	C4T28FC1	20	220/380/440	1.0	69.0	1.15	10.81	S, US
0.37/1/2	1500	S56C	**102694.00**	√	C4T14FC3	20	220/380/440	1.4	72.0	1.15	10.19	S, MX
0.37/1/2	1500	56C	**114891.00**	√	C6T14FC4	20	220/380/440	1.2	73.0	1.15	10.81	S, US
0.37/1/2	1200	56C	**114892.00**	√	C6T9FC1	28	220/380/440	1.5	68.0	1.15	11.31	S, US
0.55/3/4	3000	56C	**114893.00**	√	C6T28FC1	24	220/380/440	1.8	72.0	1.15	10.81	S, US
0.55/3/4	1500	56C	**114894.00**	√	C6T14FC6	27	220/380/440	1.9	74.0	1.15	11.31	S, US

♥ Note listing on inside back flap.
Specifications are subject to change without notice.

NEMA is a trademark of National Electrical Manufacturers Association and is not owned or controlled by Regal Beloit Corporation.

LEESON®

Special Voltage Motors

Medium Voltage Motors

2300/4000 Volts - Three Phase - Foot Mount

Applications:

Ideally suited for applications requiring heavy duty, large horsepower electric motors. Typical uses include pulp and paper mills, mineral processing, waste management facilities, lumber and wood processing mills, automobile manufacturing plants and other severe duty environments where medium voltage power is available.

Features Frames 447T - 449T:

- Full cast iron construction
- Double shielded radial ball bearings
- Designed for direct coupled loads (contact your local sales office about belted loads)
- Grease fittings with extended grease tubes
- Internal and external epoxy finish
- Premium Class H insulation system
- Front and rear cast iron bearing caps

Features Frames 5011 - 5013

- Full cast iron construction
- Double shielded radial ball bearings
- Designed for direct coupled loads (contact your local sales office about belted loads)
- Grease fittings with extended grease tubes
- Corrosion resistant breather/drains
- Oversized cast iron terminal box
- Internal and external epoxy finish
- Premium Class H insulation system
- Inpro/Seal™* bearing isolators on each end
- Front and rear cast iron bearing caps
- Provision for jacking bolts in all four feet
- Provision for dowel pins in drive end feet
- Grounding points located in terminal box and feet
- 100 ohm platinum winding RTDs as standard on sizes 400 HP and larger

Design ranges include 150 through 350 HP in 4, 6 and 8-pole designs
400 - 500 HP in 4 and 6-pole designs
600 and 700 HP ratings in 4-pole designs

Contact your local sales office for a quote

*Inpro/Seal is believed to be the trademark or trade name of INPRO/SEAL LLC and is not controlled by Regal Beloit Corporation.

NEMA is a trademark of National Electrical Manufacturers Association and is not owned or controlled by Regal Beloit Corporation.

Definite Purpose Motors

NEW!
Elevator Duty

Product Families Include:

- Compressor Duty Motors – page 153
- Pressure Washer Duty Motors – page 155
- Woodworking Motors – page 157
- Instant Reversing Motors – page 159
- Elevator Duty Motors – page 160

For a Full Selection of LEESON® Definite Purpose Motors please view the LEESON L1050E Catalogue at www.regalbeloit.com/Brands/LEESON

Definite Purpose Motors

Compressor Duty Motors

Compressor, Pump and Fan & Blower Duty

General Specifications:

Motors designed for air compressor, pump, and fan and blower duty applications which require high breakdown torque and rugged mechanical construction.

Mechanical Features:

- Double shielded ball bearings
- Designed for belted loads

Electrical Features:

- High efficient copper windings
- High starting and breakdown torque
- Dual rotation

Single Phase - Drip-Proof - Rigid Base

HP	RPM 60 Hz	NEMA® Frame	Catalogue Number	Availability	Model Number	App. Wgt. (lbs)	Voltage	Over-load Prot.	F. L. Amps @ 230 V	Service Factor	"C" Dim. (Inches)	♥Notes
1	3600	56Y	**110160.00**	√	M6C34DB6	30	115/230	Man.	6.7	SPEC	11.38	S, US
1	1800	143T	**120044.00**	√	C143C17DB3	41	115/208-230	None	6.4	1.15	11.28	S, US, 36
1	1800	143T	**120003.00**	√	M143C17DB2	36	115/208-230	Man.	6.4	1.15	11.31	S, US
1 1/2	3600	56	**110161.00**	√	P6C34DB7	36	115/230	Man.	10.0	SPEC	11.88	S, US
1 1/2	1800	145T	**120042.00**	√	C145K17DB5	38	115/208-230	None	8.6	1.15	12.28	S, US, 53
1 1/2	1800	145T	**120004.00**	√	P145K17DB3	36	115/208-230	Man.	8.6	1.15	12.28	S, US, 53
2	3600	56	**110232.00**	√	M6C34DB11	33	115/230	Man.	11.0	SPEC	11.88	S, US
2	1800	182T	**131515.00**	√	C182C17DB8	59	115/208-230	None	12.4	1.15	13.19	S, MX
2	1800	182T	**131536.00**	√	P182C17DB10	66	115/208-230	Man.	12.4	1.15	13.19	S, MX
3	3600	56Y	**110222.00**	√	M6C34DB13	41	230	Man.	15.0	1.15	12.38	S, US, 36
3	1800	184T	**131534.00**	√	C184C17DB19	78	115/230	None	16.9	1.15	14.19	S, MX
5SPL	3600	56	**116523.00**	√	P6K34DB22	30	208-230	Man.	15.0	1.00	11.44	S, MX, 53
5	3600	56Y	**111275.00**	√	P6K34DB5	47	230	Man.	20.8	1.00	13.34	S, US, 36, 53
5	3600	56Y	**116789.00**	√	P6K34DB27	52	230	Man.	20.8	1.00	12.38	S, US, 10, 53
5	3600	145T	**120554.00**	√	P145K34DB1	49	230	Man.	20.8	1.00	13.12	S, US, 53
5	1800	184T	**131537.00**	√	C184K17DB31	86	230	None	21.0	1.15	14.69	S, MX, 53
5	1800	184T	**131622.00**	√	P184K17DB33	85	230	Man.	21.0	1.15	14.69	S, MX, 53
7 1/2	3600	184T	**132044.00**	√	C184K34DB8	110	208-230	Tstat	31.0	1.15	16.69	S, MX, 53
7 1/2	3600	213T	**140680.00**	√	C213K34DB1	115	208-230	None	29.5	1.15	18.04	S, MX, 53
7 1/2	1800	215T	**140155.00**	√	C215K17DB2	116	230	None	36.0	1.15	17.26	S, MX, 53
10	3600	215T	**140681.00**	√	C215K34DB1	126	208-230	None	37.0	1.15	19.29	S, MX, 53
10	1800	215TZ	**140311.00**	D	C215K17DB4	159	230	None	43.0	1.25	19.76	S, MX, 53
10	1800	215TZ	**141430.00**	√	C215K17DB18A	159	230	None	39.0	1.25	21.09	S, MX, 53

5SPL - Breakdown torque of 5 HP, continuous duty as 3 HP motor.
D - Item to be discontinued once inventory is depleted.

♥ Note listing on inside back flap.
Specifications are subject to change without notice.

NEMA is a trademark of National Electrical Manufacturers Association. All Rights Reserved.

Definite Purpose Motors

Compressor Duty Motors

Three Phase - Drip-Proof - Rigid Base - 230/460 Volts

HP	RPM 60 Hz	NEMA® Frame	Catalogue Number	Availability	Model Number	App. Wgt. (lbs)	Voltage	F. L. Amps @ 230 V	% F.L. Eff.	Service Factor	"C" Dim. (Inches)	♥Notes
1	1800	143T	**121003.00**	√	C143T17DB10	40	230/460	3.2	85.5	1.25	12.10	S, US
1 1/2	1800	145T	**121004.00**	√	C145T17DB32	44	230/460	4.8	86.5	1.25	12.60	S, US
2	1800	145T	**121005.00**	√	C145T17DB33	48	230/460	5.8	86.5	1.25	13.60	S, US
3	1800	182T	**131519.00**	√	C182T17DB37	75	230/460	8.0	89.5	1.25	13.70	S, MX
5	1800	184T	**131520.00**	√	C184T17DB44	95	230/460	12.8	89.5	1.25	14.70	S, MX
7 1/2	1800	213T	**140470.00**	√	C213T17DB2	133	230/460	20.6	91.0	1.25	16.30	S, MX
10	1800	215T	**140472.00**	√	C215T17DB15	144	230/460	26.8	91.7	1.25	17.30	S, MX
20	1800	256T	**170006.00**	√	C256T17DB5	334	230/460	51.0	93.0	1.25	22.60	C, CN

Shaded frame indicates cast iron construction.

Green items are premium efficient.

♥ Note listing on inside back flap.
Specifications are subject to change without notice.

Three Phase - TEFC - Rigid Base - 230/460 Volts

HP	RPM 60 Hz	NEMA Frame	Catalogue Number	Availability	Model Number	App. Wgt. (lbs)	Voltage	F. L. Amps @ 230 V	% F.L. Eff.	Service Factor	"C" Dim. (Inches)	♥Notes
3	1800	182T	**131463.00**	√	C182T17FB32	83	230/460	7.8	89.5	1.15	13.96	S, MX
5	1800	184T	**131464.00**	√	C184T17FB42	87	230/460	12.8	89.5	1.15	14.96	S, MX
7 1/2	1800	213T	**140450.00**	√	C213T17FB6	144	230/460	21.4	91.7	1.25	18.70	S, MX
10	1800	215T	**140451.00**	√	C215T17FB18	153	230/460	26.6	91.7	1.25	19.70	S, MX
15	1800	254T	**170066.00**	√	C254T17FB10	261	230/460	37.0	92.4	1.15	23.19	C, CN
20	1800	256T	**170007.00**	√	C256T17FB4	382	230/460	50.0	93.0	1.15	24.92	C, CN

Shaded frame indicates cast iron construction.

Green items are premium efficient.

Note: 230/460 Volt motors are suitable for use at 208 Volts 60HZ at 1.0 Service factor.

♥ Note listing on inside back flap.
Specifications are subject to change without notice.

Three Phase - Drip-Proof - Rigid Base - 575 Volts

HP	RPM 60 Hz	NEMA Frame	Catalogue Number	Availability	Model Number	App. Wgt. (lbs)	Voltage	F. L. Amps @ 575 V	% F.L. Eff.	Service Factor	"C" Dim. (Inches)	♥Notes
1	1800	143T	**121945.00**	√	C143T17DB22A	41	575	1.3	85.5	1.25	12.12	S, US
1 1/2	1800	145T	**121946.00**	√	C145T17DB75A	43	575	1.9	86.0	1.15	12.62	S, US
2	1800	145T	**121948.00**	√	C145T17DB76A	52	575	2.3	86.5	1.25	13.62	S, US
3	1800	182T	**132261.00**	√	C182T17DB58A	71	575	3.1	89.5	1.25	13.19	S, MX
5	1800	184T	**132262.00**	√	C184T17DB80A	81	575	5.1	89.5	1.15	14.19	S, MX
7 1/2	1800	213T	**170209.00**	√	C213T17DB45	133	575	8.0	91.0	1.15	16.38	C, CN
10	1800	215T	**170211.00**	√	C215T17DB50	144	575	10.5	91.7	1.15	17.87	C, CN
15	1800	254T	**170216.00**	√	C254T17DB10	283	575	14.5	93.0	1.15	20.94	C, CN
20	1800	256T	**170046.00**	√	C256T17DB6	330	575	19.5	93.0	1.15	22.60	C, CN

Shaded frame indicates cast iron construction.

Green items are premium efficient.

♥ Note listing on inside back flap.
Specifications are subject to change without notice.

NEMA is a trademark of National Electrical Manufacturers Association. All Rights Reserved.

Definite Purpose Motors

Pressure Washer Motors

Motors specially suited for hot or cold pressure washer applications and other single phase installations requiring minimum starting and running amperages.

Mechanical Features:

- Double shielded ball bearings
- Dynamically balanced rotors

Electrical Features:

- Windings dipped in heavy duty varnish system
- Capacitor start / capacitor run designs to reduce amp draw
- Manual reset overload protection
- High service factor

Single Phase - Drip-Proof - Rigid Base

HP	RPM 60 Hz	NEMA® Frame	Catalogue Number	Availability	Model Number	App. Wgt. (lbs)	Voltage	Over-load Prot.	F. L. Amps @ 230 V	Service Factor	"C" Dim. (Inches)	♥Notes
3/4	3600	S56	**100053.00**	√	M4C34DH3	28	115/208-230	Man.	4.9	1.25	10.49	S, MX
3/4	1800	S56	**101544.00**	C/A	M4K17DH2	31	115/208-230	Man.	4.0	1.25	11.24	S, MX, 53
1	3600	56	**110097.00**	√	M6C34DB3	30	115/208-230	Man.	6.0	1.25	10.84	S, US
1	1800	56	**113630.00**	√	M6K17DB33	34	115/208-230	Man.	5.3	1.15	10.84	S, US, 53
1 1/2	3600	56	**113631.00**	√	M6K34DB15	39	115/208-230	Man.	6.2	1.15	11.34	S, US, 53
1 1/2	1800	56H	**113266.00**	√	M6K17DB30	45	115/208-230	Man.	6.7	1.15	12.38	S, US, 6, 53
1 1/2	1800	145T	**120004.00**	√	P145K17DB3	43	115/208-230	Man.	8.6	1.15	12.28	S, US, 53
2	3600	56	**113632.00**	√	P6K34DB16	39	115/208-230	Man.	8.6	1.15	11.34	S, US, 53
2	1800	56H	**116704.00**	√	P6K17DB47	45	115/208-230	Man.	8.6	1.15	12.88	S, US, 6, 53
2	1800	145T	**120879.00**	√	P145K17DB38	53	115/208-230	Man.	8.6	1.15	14.25	S, US, 53
3	3600	56H	**116706.00**	√	M6C34DB75	39	230	Man.	15.0	1.00	12.38	S, US, 6
3	1800	184T	**131851.00**	C/A	C184K17DB40	75	208-230	Man.	12.8	1.15	13.69	S, MX
5	3600	56H	**116708.00**	√	P6K34DB26	45	230	Man.	20.8	1.00	13.34	S, US, 6, 53
5	1800	184T	**131622.00**	√	P184K17DB33	85	208-230	Man.	21.0	1.15	14.69	S, MX, 53

C/A - Check Availability.

♥ Note listing on inside back flap.
Specifications are subject to change without notice.

Single Phase - TEFC - Rigid Base

HP	RPM 60 Hz	NEMA Frame	Catalogue Number	Availability	Model Number	App. Wgt. (lbs)	Voltage	Over-load Prot.	F. L. Amps @ 230 V	Service Factor	"C" Dim. (Inches)	♥Notes
3/4	3600	56	**110108.00**	√	M6C34FB7	29	115/208-230	Man.	5.0	1.15	11.48	S, US
3/4	1800	56	**110022.00**	√	M6C17FB7	32	115/208-230	Man.	5.4	1.15	11.48	S, US
1	3600	56	**110142.00**	√	M6C34FB2	31	115/208-230	Man.	6.0	1.15	11.98	S, US
1	1800	56	**110023.00**	√	M6C17FB8	31	115/208-230	Man.	6.4	1.15	11.98	S, US
1	1800	143T	**120008.00**	√	M143C17FB2	32	115/208-230	Man.	6.4	1.15	12.93	S, US
1 1/2	3600	56	**110109.00**	√	M6C34FB8	34	115/208-230	Man.	8.5	1.00	12.48	S, US
1 1/2	1800	56H	**113333.00**	√	M6K17FB32	41	115/208-230	Man.	8.6	1.00	12.81	S, US, 6, 53
1 1/2	1800	145T	**120009.00**	√	M145K17FB2	45	115/208-230	Man.	8.6	1.00	13.25	S, US, 53
2	3600	56H	**110402.00**	√	P6C34FB23	44	115/208-230	Man.	10.0	1.00	13.31	S, US, 6
2	3600	145T	**120395.00**	√	P145C34FB5	47	115/208-230	Man.	10.0	1.00	13.75	S, US
2	1800	145T	**120867.00**	√	P145K17FB22	48	115/208-230	Man.	9.2	1.00	13.75	S, US, 53
3	3600	56H	**116705.00**	√	P6K34FB31	53	230	Man.	13.0	1.00	13.99	S, US, 6, 53
3	1800	184T	**131855.00**	√	P184K17FB26	88	230	Man.	13.7	1.15	14.96	S, MX, 53
5	3600	184T	**132042.00**	√	P184K34FB9	103	230	Man.	19.8	1.15	16.97	S, MX, 53
5	1800	184T	**131856.00**	√	P184K17FB25	85	230	Man.	21.0	1.00	15.96	S, MX, 53

♥ Note listing on inside back flap.
Specifications are subject to change without notice.

NEMA is a trademark of National Electrical Manufacturers Association. All Rights Reserved.

Definite Purpose Motors

Pressure Washer Motors

Single Phase - Drip-Proof - C Face With Base

HP	RPM 60 Hz	NEMA® Frame	Catalogue Number	Availability	Model Number	App. Wgt. (lbs)	Voltage	Over-load Prot.	F. L. Amps @ 230 V	Service Factor	"C" Dim. (Inches)	♥Notes
1 1/2	3600	56C	**114214.00**	√	M6K34DK8	35	115/208-230	Man.	6.2	1.15	11.34	S, US
1 1/2	1800	56HC	**113700.00**	√	M6K17DK15	38	115/208-230	Man.	7.2	1.15	11.84	S, US, 6, 53
2	3600	56C	**114215.00**	√	P6K34DK9	45	115/208-230	Man.	8.6	1.15	11.34	S, US, 53
2	1800	56HC	**113281.00**	√	P6K17DK12	45	115/208-230	Man.	8.6	1.15	12.88	S, US, 6, 53
3	3600	56HC	**116707.00**	√	M6C34DK5	41	230	Man.	15.0	1.00	12.38	S, US, 6
3	1800	184TC	**131853.00**	√	C184K17DK18	87	208-230	Man.	13.8	1.15	13.20	S, MX, 53
5	3600	56HC	**116709.00**	√	P6K34DK18	46	230	Man.	20.8	1.00	13.84	S, US, 6, 53
5	1800	184TC	**131630.00**	√	M184K17DK13	77	208-230	Man.	21.0	1.15	14.69	S, MX, 53

♥ Note listing on inside back flap.
Specifications are subject to change without notice.

Single Phase - TEFC - C Face With Base

HP	RPM 60 Hz	NEMA Frame	Catalogue Number	Availability	Model Number	App. Wgt. (lbs)	Voltage	Over-load Prot.	F. L. Amps @ 230 V	Service Factor	"C" Dim. (Inches)	♥Notes
1/3	1800	56C	**116485.00**	C/A	M6C17FK81	29	115/208-230	Man.	3.2	1.15	10.99	S, US, 57
1/2	1800	56C	**116486.00**	√	M6C17FK80	23	115/208-230	Man.	4.4	1.15	10.99	S, US, 57
3/4	1800	56C	**116487.00**	√	M6C17FK79	30	115/208-230	Man.	5.4	1.15	11.31	S, US, 57
1	3600	56C	**115877.00**	√	M6C34FK78	30	115/208-230	Man.	6.0	1.15	11.81	S, US
1	1800	56C	**115879.00**	√	M6C17FK80	32	115/208-230	Man.	6.4	1.15	11.81	S, US
1 1/2	3600	56C	**115024.00**	√	M6K34FK16	38	115/208-230	Man.	6.2	1.15	12.31	S, US, 53
1 1/2	1800	56HC	**116703.00**	√	M6K17FK50	39	115/208-230	Man.	8.6	1.15	12.81	S, US, 6, 53
2	3600	56HC	**114995.00**	√	P6K34FK15	45	115/208-230	Man.	8.5	1.15	13.31	S, US, 6, 53
2	1800	145TC	**121465.00**	√	P145K17FK10	46	115/208-230	Man.	9.2	1.00	13.75	S, US, 53
3	3600	56HC	**115048.00**	√	P6K34FK17	49	208-230	Man.	13.0	1.00	13.98	S, US, 53
3	1800	184TC	**131857.00**	√	P14K17FK14	107	230	Man.	12.8	1.15	14.97	S, MX, 53
5	3600	184TC	**131632.00**	√	P184K34FK2	106	230	Man.	19.8	1.15	16.97	S, MX, 53
5	1800	184TC	**131633.00**	√	P184K17FK11	107	230	Man.	23.0	1.00	17.47	S, MX, 53

C/A - Check Availability.

♥ Note listing on inside back flap.
Specifications are subject to change without notice.

NEMA is a trademark of National Electrical Manufacturers Association. All Rights Reserved.

General Specifications:

- Motors designed for woodworking equipment, such as table saws, planers, etc.
- Totally enclosed
- Fully gasketed to prevent dust entry

Single Phase - TEFC - Rigid Base

HP	RPM 60 Hz	NEMA® Frame	Catalogue Number	Availability	Model Number	App. Wgt. (lbs)	Voltage	Over-load Prot.	F. L. Amps @ 230 V	Service Factor	"C" Dim. (Inches)	♥Notes
3/4	3600	56	**110108.00**	√	M6C34FB7	29	115/208-230	Man.	5.0	1.15	11.48	S, US
1	3600	56	**110142.00**	√	M6C34FB2	31	115/208-230	Man.	6.0	1.15	11.98	S, US
1 1/2	3600	56	**110109.00**	√	M6C34FB8	34	115/208-230	Man.	8.5	1.00	12.48	S, US
2	3600	56H	**110402.00**	√	P6C34FB23	44	115/208-230	Man.	10.0	1.00	13.48	S, US, 6
2	3600	145T	**120395.00**	√	P145C34FB5	47	115/208-230	Man.	10.0	1.00	13.93	S, US
3	3600	145T	**120341.00**	√	C145K34FB3	49	230	None	13.0	1.00	14.43	S, US, 53

♥ Note listing on inside back flap.
Specifications are subject to change without notice.

Single Phase - TEFC - C Face Less Base

HP	RPM 60 Hz	NEMA Frame	Catalogue Number	Availability	Model Number	App. Wgt. (lbs)	Voltage	Over-load Prot.	F. L. Amps @ 230 V	Service Factor	"C" Dim. (Inches)	♥Notes
3	3600	145TC	**120824.00**	√	P145K34FC6	56Y	230	Man.	13.0	1.00	14.43	S, US, 53

♥ Note listing on inside back flap.
Specifications are subject to change without notice.

Table Saw Motor

General Specifications:

- Extra high breakdown torque
- 8 ft. cord with 115V plug
- On/off toggle switch
- Replaces Delta®* motor 62-042

Single Phase - TEFC - Rigid Base

HP	RPM 60 Hz	NEMA Frame	Catalogue Number	Availability	Model Number	App. Wgt. (lbs)	Voltage	Over-load Prot.	F. L. Amps @ 230 V	Service Factor	"C" Dim. (Inches)	♥Notes
1 1/2	3600	56Y	**113627.00**	√	M6C34FB63	39	115/230	Man.	7.5	1.00	12.31	S, US

♥ Note listing on inside back flap.
Specifications are subject to change without notice.

*Delta is believed to be the trademark or trade name of Chang Type Industrial Co. and is not owned or controlled by Regal Beloit Corporation.

NEMA is a trademark of National Electrical Manufacturers Association. All Rights Reserved.

Definite Purpose Motors

Contractors' Saw Motors

General Specifications:

- Motor pivots on rod for belt tensioning
- Extra high breakdown torques for maximum cutting power
- 3/4 inch diameter shaft, 1-3/4 inch long with keyway
- Includes 54 inch cord
- Motors 120925.00 and 120997.00 replaces Delta®* UNISAW®* motor 83-621 (1-1/2 HP)
- Motors 120728.00 and 120998.00 replaces Delta UNISAW motors 83-651 (3 HP)

Single Phase - TEFC - Delta®* UNISAW® Mounting

HP	RPM 60 Hz	NEMA® Frame	Catalogue Number	Availability	Model Number	App. Wgt. (lbs)	Voltage	F. L. Amps @ 230 V	Service Factor	"C" Dim. (Inches)	♥Notes
1 1/2	3600	143YZ	**120925.00**	√	C143C34FB5	47	115/230	10.0	1.00	12.86	S, US
2	3600	143YZ	**120997.00**	√	C143C34FB6	44	115/230	11.0	1.00	12.86	S, US
3	3600	145YZ	**120728.00**	√	C145K34FB12	55	230	13.0	1.00	12.86	S, US, 53
4	3600	145YZ	**120998.00**	√	C145K34FB16	51	230	17.6	1.00	12.86	S, US, 53

♥ Note listing on inside back flap.
Specifications are subject to change without notice.

Contractors' Power Tool Motors

General Specifications:

- Designed for woodworking applications
- Electronic starting switch
- High starting and breakdown torques
- 48 frame model has 1-1/2 inch long shaft by 1/2 inch diameter
- 56 frame models have a 1-7/8 inch long shaft by 5/8 inch diameter
- Shaft extensions, each end, include keyway and flat, 90° apart

Single Phase - Drip Proof - Rigid Base - Double-Shaft

HP	RPM 60 Hz	NEMA Frame	Catalogue Number	Availability	Model Number	App. Wgt. (lbs)	Voltage	F. L. Amps @ 230 V	Service Factor	"C" Dim. (Inches)	♥Notes
1/2	1800	S56Z	**101781.00**	√	C4C17DH106	21	115/208-230	4.4	1.25	12.43	S, US, MX
3/4	3600	48Z	**101782.00**	C/A	C4C34DB15	27	115/208-230	4.9	1.25	12.18	S, US, MX
1	3600	56Z	**114216.00**	√	C6C34DB71	30	115/208-230	6.0	1.25	12.81	S, US

C/A - Check Availability.

♥ Note listing on inside back flap.
Specifications are subject to change without notice.

*Delta and UNISAW are believed to be the trademarks or trade names of Chang Type Industrial Company and are not owned or controlled by Regal Beloit Corporation.

NEMA is a trademark of National Electrical Manufacturers Association. All Rights Reserved.

Parking Gates, Door Operators & Slide Gates

General Specifications:

Specially designed motors for use on "instant-reversing" parking gates, doors, slide gates, or other moderate starting torque instant reversing applications. Capable of frequent reversing service.

Features:

- Instant "plug-reversing" with simple three-wire connection
- Manual overload protected
- Approx. 150% starting torque - not suitable for hard start applications

Single Phase - Drip-Proof - Resilient Base*

HP	RPM 60 Hz	NEMA® Frame	Catalogue Number	Availability	Model Number	App. Wgt. (lbs)	Voltage	Over-load Prot.	F. L. Amps @ 115 V	Service Factor	"C" Dim. (Inches)	♥Notes
1/3	1625	S56	**A099231.00**	√	M4P17DJ31A	18	115	Man.	3.8	1.00	10.31	S, MX
1/2	1625	56	**111080.00**	√	M6P17DR1G	24	115	Man.	6.0	1.00	10.82	S, US
1/2	1625	S56	**A099234.00**1	√	M4P17DJ30A	18	115	Man.	5.2	1.00	10.56	S, MX
1/2	1625	S56	**A099241.00**	√	M4P17DJ32A	17	115	Man.	4.2	1.00	10.81	S, MX
3/4	1625	56H	**113642.00**	√	M6P17DR4F	35	115	Man.	7.2	1.00	13.06	S, US, 6
3/4	1625	56	**111080MD.00**1	√	M6P17DR1G	24	115	Man.	6.0	1.00	11.31	S, US

* Catalogue number ending with "1" suffix are 15 minute duty.
♥ Note listing on inside back flap.
Specifications are subject to change without notice.

Single Phase - Drip-Proof - C Face Less Base

HP	RPM 60 Hz	NEMA Frame	Catalogue Number	Availability	Model Number	App. Wgt. (lbs)	Voltage	Over-load Prot.	F. L. Amps @ 115 V	Service Factor	"C" Dim. (Inches)	♥Notes
1/3	1625	S56C	**102017.00**	√	M4P17DC29	21	115	Man.	4.2	1.00	9.99	S, MX
1/2	1625	S56C	**102021.00**	D	M4P17DC30	22	115	Man.	6.1	1.00	10.49	S, MX
1/2	1625	S56C	**102021.00B**	√	M4P17DC53	22	115	Man.	6.0	1.00	10.49	S, US
1/2	1625	S56C	**100704.00**	√	M4P17DC7	16	115	Man.	5.1	1.00	10.24	S, MX *

Note * - Motor has same electrical design as 102017, but is rated for 60 minute duty.
D - Item to be discontinued once inventory is depleted.

♥ Note listing on inside back flap.
Specifications are subject to change without notice.

Features (Rigid Base):

- Capacitor start, induction run motors with solid state, instant reversing switch
- Manual overload protected

Single Phase - TEFC - Rigid Base

HP	RPM 60 Hz	NEMA Frame	Catalogue Number	Availability	Model Number	App. Wgt. (lbs)	Voltage	Over-load Prot.	F. L. Amps @ 230 V	Service Factor	"C" Dim. (Inches)	♥Notes
3/4	1800	56	**114932.00**	√	P6C17FB113	33	115/208-230	Man.	5.4	1.15	11.31	S, US
1	1800	56	**114933.00**	√	P6C17FB112	36	115/208-230	Man.	6.4	1.15	11.81	S, US

♥ Note listing on inside back flap.
Specifications are subject to change without notice.

NEMA is a trademark of National Electrical Manufacturers Association. All Rights Reserved.

Definite Purpose Motors

Lincoln Hydraulic Elevator Duty Motors

Applications:

Hydraulic pump, passenger, service, freight, and dumbwaiter low rise elevators. Typically, hydraulic elevators travel up to 6 floors at speeds up to 200 fpm.

Features:

- Dual rated nameplates for 80 & 120 starts/hour
- Designed for belt driven pumps
- Wye start/delta run
- Class F insulated
- 40° C ambient
- F-1 mounting
- Ball bearings with grease fittings and automatic relief
- NEMA® dimensions
- UL recognized component listing and CSA approved
- Constructed for low noise and low vibration

Three Phase - Drip-Proof - Rigid Base - 80 Starts Per Hour

HP	RPM 60 Hz	NEMA® Frame	▼ Catalogue Number	Availability	Model Number	App. Wgt. (lbs)	Voltage	% F.L. Nom. EFF.	80 Starts F.L. Amps	Locked Rotor Amps	♥Notes
15	3600	213T	**LM30092**	C/A	SSD2P10/15T61YEH2	149	230/460	85.5	35.5/17.4	162/81	S, US
15	1800	215T	**LM28867**	√	SSD4S10/15T6006YEH2	128	200	84	45	170	S, US
15	1800	215T	**LM28868**	√	SSD4S10/15T61YEH2	124	230/460	84	39.2/19.6	148/74	S, US
20	3600	215T	**LM30093**	√	SSD2P15/20T6006YEH2	135	200	88.5	53	267	S, US
20	3600	215T	**LM30094**	√	SSD2P15/20T61YEH2	138	230/460	88.5	46/23	232/116	S, US
20	1800	254T	**LM28873**	√	SSD4P15/20T6006YEH2	203	200	88.5	59	267	S, US
20	1800	254T	**LM28874**	√	SSD4P15/20T61YEH2	205	230/460	88.5	51.4/25.7	232/116	S, US
25	3600	254T	**LM30095**	√	SSD2P20/25T6006YEH2	175	200	90.2	68	331	S, MX
25	3600	254T	**LM30096**	√	SSD2P20/25T61YEH2	158	230/460	90.2	59/29.5	288/144	S, MX
25	1800	256T	**LM28879**	√	SSD4P20/25T6006YEH2	233	200	90.2	74	368	S, US
25	1800	256T	**LM28880**	√	SSD4P20/25T61YEH2	233	230/460	90.2	64/32	320/160	S, US
30	3600	256T	**LM30097**	√	SSD2P25/30T6006YEH2	235	200	90.2	80	419	S, US
30	3600	256T	**LM30098**	√	SSD2P25/30T61YEH2	235	230/460	90.2	69/34.5	364/182	S, US
30	1800	284T	**LM29850**	√	CCD4S25/30T6006YEH2	300	200	90.2	84	391	C, US
30	1800	284T	**LM29851**	√	CCD4S25/30T61YEH2	318	230/460	90.2	73/36.5	340/170	C, US
30	1800	284T	**LM33046**	√	CCD4B25/30T61YEH2	316	230/460	92.4	73/36.5	360/180	C, US

Shaded frame indicates cast iron construction.

▼ LM Numbers are Lincoln Motors™ models.
C/A - Check Availability.

♥ Note listing on inside back flap.
Specifications are subject to change without notice.

NEMA is a trademark of National Electrical Manufacturers Association. All Rights Reserved.

Three Phase - Drip-Proof - Rigid Base - 80 Starts Per Hour

HP	RPM 60 Hz	NEMA® Frame	▼ Catalogue Number	Availability	Model Number	App. Wgt. (lbs)	Voltage	% F.L. Nom. EFF.	80 Starts F.L. Amps	Locked Rotor Amps	♥Notes
40	3600	284T	**LM30099**	√	CCD2P30/40T6006YEH2	320	200	88.5	112	460	S, US
40	3600	284T	**LM30100**	√	CCD2P30/40T61YEH2	279	230/460	88.5	97/48.5	400/200	S, US
40	1800	286T	**LM29852**	√	CCD4P30/40T6006YEH2	450	200	91.7	112	495	S, US
40	1800	286T	**LM29853**	√	CCD4P30/40T61YEH2	600	230/460	91.7	97/48.5	430/215	S, US
40	1800	286T	**LM33048**	C/A	CCD4B30/40T61YEH2	411	230/460	93.0	96/48	416/208	S, US
50	3600	286T	**LM30102**	C/A	CCD2P40/50T61YEH2	277	230/460	90.2	118/159	580/290	S, US
50	1800	324T	**LM28897**	√	SD4S40/50T6006YEH2	550	200	92.4	150	667	S, US
50	1800	324T	**LM28898**	√	SD4S40/50T61YEH2	466	230/460	92.4	130/65	580/290	S, US
50	1800	324T	**LM32651**	√	SD4B40/50T61YEH2	466	230/460	94.0	125/62.5	530/265	S, US
60	1800	326T	**LM28903**	√	SD4S50/60T6006YEH2	519	200	92.4	176	787	S, US
60	1800	326T	**LM28904**	C/A	SD4S50/60T61YEH2	530	230/460	92.4	153/76.5	684/342	S, US
60	1800	326T	**LM32663**	√	SF4B50/60T61YEH2	530	230/460	94.5	151/75.5	650/325	S, US
75	1800	364T	**LM28909**	C/A	SD4P60/75T6006YEH2	693	200	93.6	206	1000	S, US
75	1800	364T	**LM28910**	√	SD4S60/75T61YEH2	709	230/460	93.6	179/89.5	870/435	S, US
100	1800	365T	**LM28914**	C/A	SD4P75/100T61YEH2	754	230/460	92.4	250/125	1084/542	S, US

Shaded frame indicates cast iron construction.

Green items are premium efficient.

▼ LM Numbers are Lincoln Motors™ models.
C/A - Check Availability.

♥ Note listing on inside back flap.
Specifications are subject to change without notice.

NEMA is a trademark of National Electrical Manufacturers Association. All Rights Reserved.

Definite Purpose Motors

Lincoln Hydraulic Elevator Duty Motors

Three Phase - Drip-Proof - Rigid Base - 120 Starts Per Hour

HP	RPM 60 Hz	NEMA® Frame	▼ Catalogue Number	Availability	Model Number	App. Wgt. (lbs)	Voltage	% F.L. Nom. EFF.	120 Starts F.L. Amps	Locked Rotor Amps	♥Notes
10	3600	213T	**LM30092**	C/A	SSD2P10/15T61YEH2	149	230/460	88.5	23.4/11.7	162/81	S, US
10	1800	215T	**LM28867**	√	SSD4S10/15T6006YEH2	128	200	89.5	28.8	170	S, US
10	1800	215T	**LM28868**	√	SSD4S10/15T61YEH2	124	230/460	89.5	25/12.5	148/74	S, US
15	3600	215T	**LM30093**	√	SSD2P15/20T6006YEH2	135	200	90.2	39	267	S, US
15	3600	215T	**LM30094**	√	SSD2P15/20T61YEH2	138	230/460	90.2	34/17	232/116	S, US
15	1800	254T	**LM28873**	√	SSD4P15/20T6006YEH2	203	200	91.0	44	267	S, US
15	1800	254T	**LM28874**	√	SSD4P15/20T61YEH2	205	230/460	91.0	38.5/19.2	232/116	S, US
20	3600	254T	**LM30095**	√	SSD2P20/25T6006YEH2	128	200	91.0	53	331	S, MX
20	3600	254T	**LM30096**	√	SSD2P20/25T61YEH2	134	230/460	91.0	46/23.1	288/144	S, MX
20	1800	256T	**LM28879**	√	SSD4P20/25T6006YEH2	233	200	91.0	60	368	S, US
20	1800	256T	**LM28880**	√	SSD4P20/25T61YEH2	233	230/460	91.0	52/26	320/160	S, US
25	3600	256T	**LM30097**	√	SSD2P25/30T6006YEH2	235	200	91.0	66.5	419	S, US
25	3600	256T	**LM30098**	√	SSD2P25/30T61YEH2	235	230/460	91.0	58/29	364/182	S, US
25	1800	284T	**LM29850**	√	CCD4S25/30T6006YEH2	300	200	91.7	70	391	C, US
25	1800	284T	**LM29851**	√	CCD4S25/30T61YEH2	318	230/460	91.7	61/30.5	340/170	C, US
25	1800	284T	**LM33046**	√	CCD4B25/30T61YEH2	320	230/460	93.6	62/31	360/180	C, US
30	3600	284T	**LM30099**	√	CCD2P30/40T6006YEH2	320	200	91.0	83	460	C, US
30	3600	284T	**LM30100**	√	CCD2P30/40T61YEH2	322	230/460	91.0	72/36	400/200	C, US
30	1800	286T	**LM29852**	√	CCD4P30/40T6006YEH2	450	200	92.4	83	495	C, US
30	1800	286T	**LM29853**	√	CCD4P30/40T61YEH2	600	230/460	92.4	72/36	430/215	C, US
30	1800	286T	**LM33048**	C/A	CCD4B30/40T61YEH2	610	230/460	94.1	74/37	416/208	C, US
40	3600	286T	**LM30102**	C/A	CCD2P40/50T61YEH2	462	230/460	91.7	94/47	580/290	C, US
40	1800	324T	**LM28897**	√	SD4S40/50T6006YEH2	550	200	93.0	122	667	S, US
40	1800	324T	**LM28898**	√	SD4S40/50T61YEH2	552	230/460	93.0	106/53	580/290	S, US
40	1800	324T	**LM32651**	√	SD4B40/50T61YEH2	554	230/460	94.1	103/51.5	530/265	S, US
50	1800	326T	**LM28903**	√	SD4G50/60T6006YEH2	519	200	93.0	150	787	S, US
50	1800	326T	**LM28904**	√	SD4G50/60T61YEH2	530	230/460	93.0	130/65	684/332	S, US
50	1800	326T	**LM32663**	√	SF4B50/60T61YEH2	535	230/460	94.5	131/65.5	650/325	S, US
60	1800	364T	**LM28909**	C/A	SD4P60/75T6006YEH2	693	200	93.6	167	1000	S, US
60	1800	364T	**LM28910**	√	SD4S60/75T61YEH2	709	230/460	93.6	145/72.5	870/435	S, US
75	1800	365T	**LM28914**	C/A	SD4P75/100T61YEH2	754	230/460	94.1	187/93.5	1084/542	S, US

Shaded frame indicates cast iron construction.

Green items are premium efficient.

▼ LM Numbers are Lincoln Motors™ models.
C/A - Check Availability.

♥ Note listing on inside back flap.
Specifications are subject to change without notice.

NEMA is a trademark of National Electrical Manufacturers Association. All Rights Reserved.

Features:

- Fail-safe positive stop and holding brakes
- Load stops automatically when power is turned off
- Manual brake release designs
- Dual voltage brake coils
- Single and three phase models
- Wash Down Duty® models
- Brake kits available
- Coupler brake kits available
- High cycle models available
- IEC Brakemotors - see page 169

Applications:
For use where quick response stopping and holding is required in the application, which may include conveyors, hoists, packaging equipment etc…

Brakemotors

Single Phase & Three Phase

Single Phase - TENV/TEFC - C Face With Base

HP	SYN RPM 60 Hz	NEMA® Frame	Brake Rating (ft-lbs)	Catalogue Number	Availability	Model Number	App. Wgt. (lbs)	Voltage	F. L. Amps @ 230V	Service Factor	"C" Dim. (Inches)	♥Notes
1/3	1800	56C	3	**114165.00**	√	C6C17NK19	31	115/208-230	2.9	1.15	14.06	S, US, 12
1/2	1800	56C	3	**111950.00**	√	C6C17FK20	32	115/208-230	4.4	1.00	15.73	S, US, 13
3/4	1800	56C	6	**114167.00**	√	C6C17FK50	40	115/208-230	5.4	1.15	16.23	S, US, 13
1	1800	56C	6	**111951.00**	√	C6K17FK21	38	115/208-230	5.3	1.00	16.73	S, US, 13, 53
1 1/2	1800	145TC	10	**121815.00**	√	C145K17FK17	40	115/208-230	8.8	1.00	18.23	S, US, 13, 53
2	1800	145TC	10	**121816.00**	√	C145K17FK16	55	115/208-230	8.6	1.00	19.23	S, US, 13, 53

Note 12: TENV
Note 13: TEFC

♥ Note listing on inside back flap.
Specifications are subject to change without notice.

Three Phase - TEFC/TENV - C Face With Base - 230/460 Volts

HP	SYN RPM 60 Hz	NEMA Frame	Brake Rating (ft-lbs)	Catalogue Number	Availability	Model Number	App. Wgt. (lbs)	Voltage	F. L. Amps @ 230V	% F.L. EFF.	Service Factor	"C" Dim. (Inches)	♥Notes
1/3	1800	56C	3	**110669.00**	√	C6T17NK1	32	230/460	1.3	72.0	1.15	13.56	S, US, 12
1/2	1800	56C	3	**110670.00**	√	C6T17NK2	42	230/460	1.8	78.5	1.15	14.06	S, US, 12
3/4	1800	56C	6	**110671.00**	√	C6T17NK3	45	230/460	2.5	80.0	1.15	14.56	S, US, 12
1	1800	56HC	6	**119563.00**	√	C6T17FK105	45	230/460	3.2	85.5	1.15	17.31	S, US, 13
1	1800	143TC	6	**122248.00**	√	C143T17FK30	45	230/460	3.2	85.5	1.15	17.66	S, US, 13
1 1/2	1800	145TC	10	**122249.00**	√	C145T17FK76	53	230/460	4.8	86.5	1.15	18.16	S, US, 13
2	1800	145TC	10	**122250.00**	√	C145T17FK75	54	230/460	5.8	86.5	1.15	18.66	S, US, 13
3	1800	182TC*	15	**171320BRK**	√	————	120	230/460	8.0	89.5	1.15	23.00	C,CN, 13
5	1800	184TC*	25	**171322BRK**	√	————	129	230/460	12.8	89.5	1.15	23.00	C,CN, 13
7 1/2	1800	213TC	35	**170157BRK**	√	————	180	230/460	18.6	91.7	1.15	27.50	C,CN, 13
10	1800	215TC	50	**170140BRK**	√	————	210	230/460	25.0	91.7	1.15	29.00	C,CN, 13

Shaded frame indicates cast iron construction.

Green items are premium efficient.
Note 12: TENV
Note 13: TEFC
Note: 230/460 Volt motors are suitable for use at 208 Volts 60HZ at 1.0 Service factor.

♥ Note listing on inside back flap.
Specifications are subject to change without notice.

Brakes are sized to have a 1.15 service factor
*180 frame brakes have a manual release under the fan cowl.

Three Phase - TEFC/TENV - C Face With Base - 575 Volts

HP	SYN RPM 60 Hz	NEMA Frame	Brake Rating (ft-lbs)	Catalogue Number	Availability	Model Number	App. Wgt. (lbs)	Voltage	F. L. Amps @ 575V	% F.L. EFF.	Service Factor	"C" Dim. (Inches)	♥Notes
1/3	1800	56C	3	**110708.00**	√	C6T17NK4H	33	575	.52	72.0	1.15	13.57	S, US, 12
1/2	1800	56C	3	**110709.00**	√	C6T17NK5G	34	575	.68	80.0	1.15	14.06	S, US, 12
3/4	1800	56C	6	**110710.00**	√	C6T17NK6G	45	575	1.0	80.0	1.15	14.56	S, US, 12
1	1800	56C	6	**119604.00**	√	C6T17FK110A	54	575	1.3	85.5	1.15	17.31	S, US, 13
1 1/2	1800	145TC	10	**122279.00**	√	C145T17FK77A	54	575	1.9	86.5	1.15	18.16	S, US, 13
2	1800	145TC	10	**122269.00**	√	C145T17FK78A	54	575	2.3	86.5	1.15	18.66	S, US, 13
3	1800	182TC*	15	**171321BRK**	√	————	120	575	3.1	90.2	1.15	23.00	C,CN, 13
5	1800	184TC*	25	**171323BRK**	√	————	129	575	5.1	89.5	1.15	23.00	C,CN, 13
71/2	1800	213TC	35	**170207BRK**	√	————	180	575	7.5	91.7	1.15	27.51	C,CN, 13
10	1800	215TC	50	**170212BRK**	√	————	210	575	10.1	91.7	1.15	29.01	C,CN, 13

Shaded frame indicates cast iron construction.

Green items are premium efficient.
Note 12: TENV Note 13: TEFC

♥ Note listing on inside back flap.
Specifications are subject to change without notice.

Brakes are sized to have a 1.15 service factor
*180 frame brakes have a manual release under the fan cowl.

NEMA is a trademark of National Electrical Manufacturers Association and is not owned or controlled by Regal Beloit Corporation.

Applications:

For use in applications that require frequent starting and stopping such as conveyors and unit and baggage handling equipment.

Features:

- All cast iron construction
- Stearns®* high cycle brakes
- Manual release lever on brakes
- UL and CSA recognized construction

Three Phase - TENV - C Face Less Base - 230 Volts

HP	SYN RPM 60 Hz	NEMA® Frame	Brake Rating (ft-lbs)	Catalogue Number	Availability	Model Number	App. Wgt. (lbs)	Voltage	F. L. Amps @ 230V	% F.L. EFF.	Service Factor	"C" Dim. (Inches)	♥Notes
1/2	1800	56C	6	**117698.00**	√	C6T17NC332	60	230	1.6	82.5	1.00	15.10	C, US
3/4	1800	56C	6	**117699.00**	√	C6T17NC333	65	230	2.2	85.5	1.00	16.10	C, US
1	1800	56C	6	**119566.00**	√	C6T17NC343	82	230	3.0	85.5	1.15	16.10	C, US
1.5	1800	143TC	12	**122254.00**	√	C145T17NC33	93	230	4.6	86.5	1.25	16.16	C, US
2	1800	145TC	12	**122255.00**	√	C145T17NC31	98	230	6.0	86.5	1.15	16.16	C, US

Green items are premium efficient.

♥ Note listing on inside back flap.
Specifications are subject to change without notice.

Stainless Steel Brakemotors

Three Phase - TENV - C Face With Base - 230/460 Volts

HP	SYN RPM 60 Hz	NEMA Frame	Brake Rating (ft-lbs)	Catalogue Number	Availability	Model Number	App. Wgt. (lbs)	Voltage	F. L. Amps @ 230V	% F.L. EFF.	Service Factor	"C" Dim. (Inches)	♥Notes
1/2	1800	56HC	3	**116483.00**	C/A	CZ6T17VK31	59	230/460	1.6	78.5	1.15	16.51	S, US, 12
1	1800	56HC	6	**119785.00**	√	CZ6T17VK61	73	230/460	2.8	85.5	1.15	18.01	S, US, 12

Green items are premium efficient.
C/A - Check Availability.

♥ Note listing on inside back flap.
Specifications are subject to change without notice.

*Stearns is believed to be the trademark or trade name of Rexnord Industries and is not owned or controlled by Regal Beloit Corporation.

NEMA is a trademark of National Electrical Manufacturers Association and is not owned or controlled by Regal Beloit Corporation.

Brakemotors

Brakekits™ Kits

- Kit of components to convert 56 through 256T frame stock TEFC motors to fail-safe brakemotors.
- Kit mounts on fan end of motor. Kits for 56-184T steel frame motors include totally enclosed Stearns®* AC brake, replacement cast fan cover, shaft extension, fan and hardware. Kits for 213T-256T cast iron frame motors do not include brake, but are designed for Stearns 87,000 series brake.
- Two 1/2" NPT holes with 18" leads are provided for connections. The Regal® kit adds 5-1/8" to the overall length of 56 and 143-5T frame, and 5-7/8" to the overall length of 182-184T frame.

Kits

Brake Rating (ft-lbs)	Mounts to NEMA® Frame	Max. HP @1725 RPM	Catalogue No. 115/230 V Brake Coil Voltage	Catalogue No. 208-230/460V Brake Coil Voltage	Catalogue No. 575V Brake Coil Voltage	App. Wt. (lbs.)
3	48/S56	1	——	**175615.00♠**	——	10
3	56/143-5T	1	**175762.00◊**	**175765.00◊**	**175768.00◊**	10
6	56/143-5T	2	**175763.00◊**	**175766.00◊**	**175769.00◊**	10
10	56/143-5T	3	**175764.00◊**	**175767.00◊**	**175770.00◊**	10
15	182-4T	3	——	**175696.00**	**175698.00**	12
25	182-4T	5	——	**175697.00**	**175699.00**	12

56/143-5T frame kits cannot be used on S56 frame motors.
All brake coils are single phase. You can use a 230/460 V coil on a single phase motor by using the 230 volt motor connection and the 230 V brake connection.
♠ For motors having a "P" or "K" for the suffix letter on the date code and having a face mount fan guard.
◊ For 56/145 frame motors having a "B" for the suffix letter for the date code and having a face mount fan guard.
Note: TC frame, JM & JP pump motors having a B or M suffix letter on date code can also use brake kits.

Brake Selection

In this table, brake torque ratings are no less than 140% of the motor full load torque. Match HP & frame size of motor with appropriately rated brake kit.

HP	Brakemotor RPM Torque Rating		
	3450	1725	1140
1/3	3	3	3
1/2	3	3	3
3/4	3	6	6
1	3	6	6
1 1/2	6	10	10
2	6	10	15
3	10	15	25
5	15	25	35
7 1/2	25	35	50
10	25	50	75
15	35	75	105
20	50	105	–

Brake Adapter Kits

Brake Rating (ft-lbs)	Mounts to NEMA Frame	Max. HP @ 1725 RPM	Catalogue Number	App. Wt. (lbs.)
6-105	213-5T	10	**175710.00**	30
6-105	254-6T	20	**175711.00**	40

- Brake Adapter Kits include adapter casting/fan guard, brake fan, adapter shaft and hardware needed to mount a Stearns®* 87,000 series brake (sold separately).
- Shaded frame sizes are for use with cast iron motors.
- For use with Wattsaver® and "G" Prefix cast iron motors

Old Design

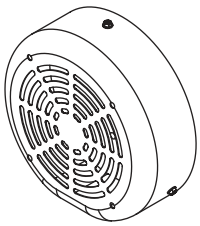

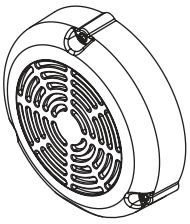

New Design - Face Mount

*Stearns is believed to be the trademark or trade name of Rexnord Industries and is not owned or controlled by Regal Beloit Corporation.

NEMA is a trademark of National Electrical Manufacturers Association and is not owned or controlled by Regal Beloit Corporation.

Kits include a Stearns®* NEMA® 4X brake to convert 56 thru 145T frame stock TEFC only motors to fail-safe brakemotors. Food safe white epoxy finish. BISSC Certified. Adds 5-1/8" to the overall length of 56 thru 145T Washguard® TEFC motors.

For 230/460V, 575V Three Phase and 230V Single Phase Motors

Brake Rating (ft-lbs)	Mounts to NEMA® Frame	Max. HP @ 1725 RPM	230/460V Catalogue Number	575V Catalogue Number	App. Wt. (lbs.)
3	56/143-5T	1	**175771.00***	**175771-5***	24
6	56/143-5T	2	**175772.00***	**175772-5***	36
10	56/143-5T	3	**175773.00***	**175773-5***	43

* For 56/145 frame motors having a "B" for the suffix letter for the date code and having a face mount fan guard.
Specifications are subject to change without notice

Coupler Brakes

Double C Face Coupler Brakes

- A new and expanded line of coupler brakes designed for applications where mounting the brake between the motor and driven load is the preferred, or most convenient, location. They are an excellent problem solver for applications where a brake needs to be added to existing equipment – without replacing the motor.
- Rugged cast aluminum or cast iron construction Stearns brakes are well suited to most industrial applications. Coupler brakes are designed to be C-face connected on both ends – these brakes are not suited for overhung loads to be applied to the output shaft.
- A wide range of voltages and brake torque ratings in both NEMA 2 and NEMA 4X enclosures are available from stock. NEMA 2 brakes are best suited for use with standard ODP and TEFC motors. NEMA 4X brakes are designed for use with LEESON® Washguard motors.

General Purpose Coupler Brakes

- Mounts directly to the face and shaft of NEMA 56 through 215T-frame C-face motors to create a fail-safe brakemotor.
- The 6 ft.lb. brake mounts to NEMA 56C or 143-5TC motors using an optional adaptor sleeve, which is included with the brake. Output shaft can be either 56C or 143-5TC depending on the location of the provided adaptor sleeve. A 1/2 NPT threaded lead exit hole is provided for power connections.

*Stearns is believed to be the trademark or trade name of Rexnord Industries and is not owned or controlled by Regal Beloit Corporation.

NEMA is a trademark of National Electrical Manufacturers Association and is not owned or controlled by Regal Beloit Corporation.

Brakemotors

General Purpose Coupler Brakes

Stearns®*

General Purpose (NEMA® 2) Coupler Brakes For Both Single and Three Phase Motors

Brake Rating (ft-lbs)	Max.HP@ 1725 RPM	Motor Voltage 115/208-230V	Motor Voltage 208-230/460V	Motor Voltage 575V	Mounts to NEMA® Frame	Coupler Brake Output Shaft and Face	Add to Motor "C" Dim.	App. Wt. (lbs.)
3	1	**175563.00**	**175564.00**	**175565.00**	56C	5/8", 56C	4.91	13
6	2	**175569.00**	**175570.00**	**175571.00**	56C/143-5TC	5/8" or 7/8", 56C	4.91	14
10	3	**175575.00**	**175576.00**	**175577.00**	143-5TC	7/8", 143-5TC	4.91	15
15	3	—	**175581.00**	—	143-5TC	7/8", 143-5TC	4.91	16
15	3	—	**175583.00**	—	182-4TC	1 1/8", 182-4TC	8.38	58
25	5	—	**175585.00**	—	182-4TC	1 1/8", 182-4TC	8.38	58
35	7 1/2	—	**175587.00**	—	213-5TC	1 3/8", 213-5TC	8.88	60
50	10	—	**175589.00**	—	213-5TC	1 3/8", 213-5TC	8.88	62

Specifications are subject to change without notice.

Washguard® Coupler Brakes

Solid die-cast aluminum Stearns®* NEMA 4X coupler brake converts any TEFC or TENV 56C thru 215TC motor to a fail-safe brakemotor by mounting between the C-face motor and driven equipment. Food safe white epoxy finish. BISSC certified. Adds 5" to the overall length of 56C thru 145TC Washguard® TEFC or TENV motors. Includes all mounting components.

Washguard® (NEMA 4X) Coupler Brakes For Both Single and Three Phase Motors

Brake Rating (ft-lbs)	Max.HP@ 1725 RPM	Motor Voltage 115/208-230V	Motor Voltage 208-230/460V	Motor Voltage 575V	Mounts to NEMA Frame	Coupler Brake Output Shaft and Face	Add to Motor "C" Dim.	App. Wt. (lbs.)
3	1	**175566.00**	**175567.00**	**175568.00**	56C	5/8", 56C	4.94	13
6	2	**175572.00**	**175573.00**	**175574.00**	56C/143-5TC	5/8" or 7/8", 56C	4.94	14
10	3	**175578.00**	**175579.00**	**175580.00**	143-5TC	7/8", 143-5TC	4.94	15
15	3	—	**175582.00**	—	143-5TC	7/8", 143-5TC	4.94	16
15	3	—	**175584.00**	—	182-4TC	1 1/8", 182-4TC	8.38	58
25	5	—	**175586.00**	—	182-4TC	1 1/8", 182-4TC	8.38	58
35	7 1/2	—	**175588.00**	—	213-5TC	1 3/8", 213-5TC	8.88	60
50	10	—	**175590.00**	—	213-5TC	1 3/8", 213-5TC	8.88	62

Specifications are subject to change without notice.

*Stearns is believed to be the trademark or trade name of Rexnord Industries and is not owned or controlled by Regal Beloit Corporation.

NEMA is a trademark of National Electrical Manufacturers Association and is not owned or controlled by Regal Beloit Corporation.

NEW!

IEC Brakemotors

These motors meet North American performance standards and premium energy efficiency mandates and have a 1.15 service factor. Typically used for replacement on machine tools, textile tools, textile machinery and other equipment with metric dimensions but requiring the high torque and performance of motors designed for use in North America.

AC Metric - Three Phase

Features:

- Cast iron frame construction
- 60/50 Hz interchangeability
- 230 volt brake coil
- IP55 enclosure protection
- B3 mounting
- B5 & B14 flange kits available
- UL listed and CSA certified

AC Metric - Three Phase - TEFC - B3 Mounting - Rigid Base - 230/460 Volts

HP/KW	SYN RPM 60 Hz	NEMA® Frame	Brake Rating (ft-lbs)	Catalogue Number	Availability	Model Number	App. Wgt. (lbs)	Voltage	F. L. Amps @ 230 V	% F.L. Eff.	Service Factor	"C" Dim. (Inches)	♥Notes
1-0.75	1800	80M	6	**194222.00**	C/A	C80T17FZ47A	63	230/460	3.00	85.5	1.15	13.19	C, CN
1 1/2-1.1	1800	90S	12	**194223.00**	C/A	C90T17FZ31A	73	230/460	4.22	86.5	1.15	15.48	C, CN
2-1.5	1800	90L	12	**194224.00**	C/A	C90T17FZ32A	117	230/460	5.62	86.5	1.15	15.48	C, CN
3-2.2	1800	100L	24	**194225.00**	C/A	C100T17FZ49A	117	230/460	7.84	89.5	1.15	18.13	C, CN
4-3	1800	112M	44	**194226.00**	C/A	C112T17FZ30A	143	230/460	10.50	89.5	1.15	19.08	C, CN
5 1/2-4	1800	112M	74	**194227.00**	C/A	C112T17FZ31A	143	230/460	14.00	89.5	1.15	19.08	C, CN

Green items are premium efficient.
C/A - Check Availability.

♥ Note listing on inside back flap.
Specifications are subject to change without notice.

IEC Frame	B5 Flange Kit	B14 Flange Kit
80M	**176177.00**	**176181.00**
90S	**176178.00**	**176182.00**
90L	**176178.00**	**176182.00**
100L	**176179.00**	**176183.00**
112M	**176180.00**	**176184.00**

NEMA is a trademark of National Electrical Manufacturers Association and is not owned or controlled by Regal Beloit Corporation.

IEC Motors

LEESON® Passport Series

Stock standard solutions ready to deliver from locations across the country.

Mount: IM B3/B5

Mount: IM B3

Mount:
IM B3/450 Frame
(custom)

IEC Motors

	Aluminum Frame AC	Cast Iron Frame AC	Permanent Magnet DC	Commercial Duty DC
Enclosure Type	**TEFC**	**TEFC**	**TENV – TEFC**	**TENV**
Range	0.18 kW–2.2 kW	1.5 kW–75 kW	0.06 kW–2.2 kW	0.050–0.125 kW
Voltage	230/460 & 575 Volts	230/460 & 575 Volts	24 & 180 Volts DC	12, 24 & 90 Volts DC
Speed	2, 4 & 6-Pole	2, 4 & 6-Pole	3000 & 1800 RPM	3000
Frequency	60 Hz (50 Hz derated to next lowest HP)	60 Hz (50 Hz derated to next lowest HP)	DC	DC
IEC Frame	63–90	100–315	56, 63, 71, 80, 90, 112	56
Mounting Flanges	B3, B5 and B14	B3, B5 and B14	B3, B5 & B14	B14
Ambient	40°C	40°C	40°C	40°C
Insulation	Class F Class B Rise	Class F Class B Rise	Class F	Class F
NEMA® Design B Breakdown Torque	175–300%	175–300%	N/A	N/A
IEC Design N Breakdown Torque	160–200%	160–200%	N/A	N/A
NEMA Design B Lock Rotor Torque	70–275%	70–275%	N/A	N/A
IEC Design N Lock Rotor Torque	75–275%	75–275%	N/A	N/A
Service Factor	1.15	1.15	1.0	1.0
Inverter Duty	10:1	10:1	SCR 10:1	SCR 10:1
Accessories	B5 & B14 Flange Kits	B5 & B14 Flange Kits	B5 & B14 Flange Kits	N/A
Shaft Seals	Yes	Yes	Yes	Yes
Terminal Boards	Yes	Yes	N/A	N/A
IP Construction	IP55	IP55	IP54	IP44
Efficiency	IE2, IE3 (90 Frame) EPACT and NEMA Premium®	IE3 – NEMA Premium	Varies by HP	Varies by HP
Removable Base	Yes	No	Yes	No Base

NEMA and NEMA Premium are trademarks of National Electrical Manufacturers Association and are not owned or controlled by Regal Beloit Corporation.

IEC Motors

AC Metric – Three Phase – 230/460 Volt – 575 Volt

These motors meet North American performance standards, premium energy efficiency mandates, and have 1.15 service factors.

Typically used for replacement on machine tools, textile tools, textile machinery and other equipment with metric dimensions but requiring the high torque and performance of motors designed for use in North America.

Features:

- Aluminum frame and cast iron frame construction
- DC IEC motors available
- 60/50 Hz interchangeability
- B3, B5, B14 mounting
- Flange kits available
- IRIS® inverter rated insulation system on cast iron and aluminum AC models
- UL listed and CSA certified

IEC Motors

AC Metric (IEC) Motors – Three Phase

ALUMINUM FRAME

CSA: File number LR33543
UL: File number E57948 for motors produced January 2004 and later

IRIS® inverter rated insulation system from Regal provides superior protection against voltage spikes induced by variable frequency drives.

CE CONFORMITE EUROPEENE

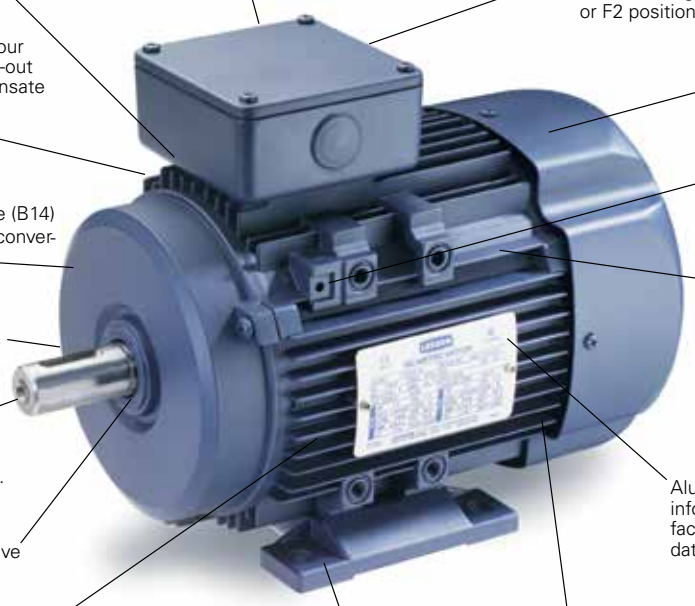

Terminal boards included.
- 230/460V motors have 9 leads.
- 575V motors have 3 leads.
- All terminal boards have 6 posts.

IP55 weatherproof enclosure allows for use in a wide range of applications.

Conduit box with neoprene gaskets. Reposition metric "PG" tapped lead exit hole by rotating box in 90 degree increments. Move box to F1 or F2 position by relocating motor feet.

Drain hole locations in four quadrants can be drilled-out for multi-position condensate drainage.

Special design steel fan cover and low-noise fan maximize airflow efficiency.

External grounding provision.

D flange (B5) and C face (B14) models available. Field conversion kits also offered.

Multi-mount repositionable feet allow for three conduit box positions (F2, F1, F3).

"Captive Shaft" keyway.

Drilled and tapped shaft.

Aluminum "full fact" nameplate with information on motor efficiency and power factor. Stamped with 60 Hz and 50 Hz data.

V – seals on both the drive end and non drive end.

Class F insulation system with Class B temperature rise or lower.

High efficiency design utilizes low-loss steel laminations for optimum power and performance.

Removable feet.

CAST IRON FRAME

CSA: File number LR62104
UL: File number E57948 for motors produced June 2003 and later

Terminal boards included.
- 230/460V motors, 132-frame and larger have 12 leads and 9 post terminal boards.
- 230/460V motors, smaller than 132-frame have 9 leads and 6 post terminal boards.
- 575V motors have 3 leads and 6 post terminal boards.

Conduit box with neoprene gaskets. Reposition metric "PG" threaded lead exit by rotating box in 90 degree increments. Motors 132 frame and larger have second lead exit hole for auxiliary box. Box is fixed at F3 location.

Heavy-duty cast iron construction includes frame, endbells and conduit box.

High efficiency design utilizes low-loss steel laminations for optimum power and performance.

IP55 weatherproof enclosure allows for use in a wide range of applications.

Non-sparking fan. Small size reduces noise and enhances efficiency.

D flange (B5) and C face (B14) models available. Field conversion kits also offered.

Steel fan cover.

Drilled and tapped shaft.

Stainless steel "full fact" nameplate with information on motor efficiency and power factor. Stamped with 60 Hz and 50 Hz data

Oil seals on both the drive end and non drive end.

Cast iron mounting feet are precision machined for accurate alignment.

Class F insulation system with Class B temperature rise or lower.

IEC Metric Motors

AC Metric (IEC) Motors - B3 - Three Phase - Rigid Base

Three Phase - TEFC - B3 - Rigid Base - IP55 - 208-230/460 Volts

HP/KW	SYN RPM 60 Hz	IEC Frame	Catalogue Number	Availability	Model Number	App. Wgt. (lbs)	Voltage	F. L. Amps @ 230 V	% F.L. Eff.	Service Factor	"C" Dim. (Inches)	♥Notes
1/4-0.18	3600	D63	**192010.00**	√	C63T34FZ1C	10	208-230/460	0.8	72.0	1.15	8.54	A, CN
1/4-0.18	1800	D63	**192011.00**	√	C63T17FZ1C	11	208-230/460	1.0	68.0	1.15	8.54	A, CN
1/4-0.18	1200	D71	**192012.00**	√	C71T11FZ1C	12	208-230/460	1.1	64.0	1.15	9.45	A, CN
1/3-0.25	3600	D63	**192020.00**	√	C63T34FZ2C	11	208-230/460	1.1	72.0	1.15	8.54	A, CN
1/3-0.25	1800	D71	**192021.00**	√	C71T17FZ1C	16	208-230/460	1.4	68.0	1.15	9.45	A, CN
1/3-0.25	1200	D80	**192022.00**	C/A	C80T11FZ1C	20	208-230/460	1.3	70.0	1.15	11.10	A, CN
1/2-0.37	3600	D71	**192030.00**	√	C71T34FZ1C	13	208-230/460	1.6	74.0	1.15	9.45	A, CN
1/2-0.37	1800	D71	**192031.00**	√	C71T17FZ2C	14	208-230/460	1.8	74.0	1.15	9.45	A, CN
1/2-0.37	1200	D80	**192032.00**	√	C80T11FZ2C	22	208-230/460	1.9	72.0	1.15	11.10	A, CN
3/4-0.56	3600	D71	**192040.00**	√	C71T34FZ2C	15	208-230/460	2.4	74.0	1.15	9.45	A, CN
3/4-0.56	1800	D80	**192041.00**	√	C80T17FZ1C	21	208-230/460	2.5	74.0	1.15	11.10	A, CN
3/4-0.56	1200	D80	**192042.00**	√	C80T11FZ3C	25	208-230/460	2.7	72.0	1.15	11.10	A, CN
1-0.75	3600	D80	**192050.00**	D	C80T34FZ1C	24	208-230/460	2.8	75.5	1.15	11.10	A, CN
1-0.75	3600	D80	**192264.00**	√	C80T34FZ55A	25	208-230/460	2.8	77.0	1.15	11.10	A, CN
1-0.75	1800	D80	**192051.00**	D	C80T17FZ2C	26	208-230/460	3.2	82.5	1.15	11.10	A, CN
1-0.75	1800	D80	**192241.00**	√	C80T17FZ2	24	208-230/460	3.0	85.5	1.15	11.89	A, CN
1-0.75	1200	D90S	**192200.00**	√	C90T11FZ13A	30	208-230/460	3.2	82.5	1.15	12.83	A, CN
1 1/2-1.1	3600	D80	**192060.00**	√	C80T34FZ2C	36	208-230/460	4.0	84.0	1.15	11.10	A, CN
1 1/2-1.1	1800	D90S	**192202.00**	√	C90T17FZ13 A	40	208-230/460	4.4	86.5	1.15	12.83	A, CN
2-1.5	3600	D90S	**192208.00**	√	C90T34FZ13A	36	208-230/460	5.0	85.5	1.15	12.83	A, CN
2-1.5	1800	D90L	**192205.00**	√	C90T17FZ16A	42	208-230/460	5.4	86.5	1.15	13.39	A, CN
2-1.5	1200	DF100L	**193300.00**	C/A	C100T11FZ20A	94	208-230/460	6.0	88.5	1.15	16.34	C, CN

Shaded frame indicates cast iron construction.

Continued On Next Page.

Green items are premium efficient.

D - Item to be discontinued once inventory is depleted.
C/A - Check availability.
See page 179 for B5 and B14 Flange Kits.

♥ Note listing on inside back flap.
Specifications are subject to change without notice.

Three Phase - TEFC - B3 - Rigid Base - IP55 - 208-230/460 Volts

HP/KW	SYN RPM 60 Hz	IEC Frame	Catalogue Number	Availability	Model Number	App. Wgt. (lbs)	Voltage	F. L. Amps @ 230 V	% F.L. Eff.	Service Factor	"C" Dim. (Inches)	♥Notes
3-2.2	3600	D90L	**192209.00**	√	C90T34FZ14A	39	208-230/460	7.2	87.5	1.15	13.39	A, CN
3-2.2	1800	DF100L	**193301.00**	√	C100T17FZ41A	92	208-230/460	8.0	90.2	1.15	16.34	C, CN
3-2.2	1200	DF112M	**193302.00**	C/A	C112T11FZ21A	151	208-230/460	9.6	89.5	1.15	18.42	C, CN
4-3	3600	DF100L	**193303.00**	√	C100T34FZ20A	71	208-230/460	9.2	89.5	1.15	16.34	C, CN
4-3	1800	DF100L	**193304.00**	√	C100T17FZ42A	90	208-230/460	12.4	89.5	1.15	16.34	C, CN
4-3	1200	DF132S	**193305.00**	C/A	C132T11FZ58A	162	208-230/460	12.4	89.5	1.15	18.27	C, CN
5 1/2-4	3600	DF112M	**193306.00**	√	C112T34FZ24A	124	208-230/460	12.6	89.5	1.15	16.14	C, CN
5 1/2-4	1800	DF112M	**193307.00**	√	C112T17FZ21A	124	208-230/460	14.0	89.5	1.15	16.14	C, CN
5 1/2-4	1200	DF132M	**193308.00**	C/A	C132T11FZ59A	182	208-230/460	17.0	89.5	1.15	19.65	C, CN
7 1/2-5.5	3600	DF132S	**193309.00**	√	C132T34FZ45A	152	208-230/460	18.0	89.5	1.15	18.15	C, CN
7 1/2-5.5	1800	DF132S	**193310.00**	√	C132T17FZ43A	159	208-230/460	18.4	92.4	1.15	18.15	C, CN
7 1/2-5.5	1200	DF132M	**193311.00**	C/A	C132T11FZ60A	180	208-230/460	21.6	91.0	1.15	19.65	C, CN
10-7.5	3600	DF132S	**193312.00**	√	C132T34FZ46A	171	208-230/460	24.0	90.2	1.15	18.15	C, CN
10-7.5	1800	DF132M	**193313.00**	√	C132T17FZ44A	181	208-230/460	24.0	91.7	1.15	19.65	C, CN
10-7.5	1200	DF160M	**193314.00**	C/A	C160T11FZ39A	251	208-230/460	28.8	91.7	1.15	23.62	C, CN
15-11	3600	DF160M	**193315.00**	√	C160T34FZ59A	260	208-230/460	35.0	91.0	1.15	23.62	C, CN
15-11	1800	DF160M	**193316.00**	√	C160T17FZ43A	264	208-230/460	37.0	92.4	1.15	23.62	C, CN
15-11	1200	DF160L	**193317.00**	C/A	C160T11FZ40A	342	208-230/460	40.0	91.7	1.15	25.39	C, CN
20-15	3600	DF160M	**193318.00**	√	C160T34FZ60A	269	208-230/460	47.0	91.0	1.15	23.62	C, CN
20-15	1800	DF160L	**193319.00**	√	C160T17FZ44A	311	208-230/460	50.0	93.0	1.15	25.39	C, CN
20-15	1200	DF180L	**193320.00**	√	C180T11FZ20A	398	208-230/460	54.0	92.4	1.15	28.27	C, CN
25-18.5	3600	DF160L	**193321.00**	√	C160T34FZ61A	330	208-230/460	58.0	91.7	1.15	25.39	C, CN
25-18.5	1800	DF180M	**193322.00**	√	C180T17FZ41A	393	208-230/460	58.6	93.0	1.15	26.77	C, CN
25-18.5	1200	DF200L	**193323.00**	C/A	C200T11FZ39A	530	208-230/460	66.0	93.6	1.15	29.53	C, CN
30-22	3600	DF180M	**193324.00**	C/A	C180T34FZ19A	355	208-230/460	69.0	93.0	1.15	26.77	C, CN
30-22	1800	DF180L	**193325.00**	√	C180T17FZ42A	441	208-230/460	70.0	94.1	1.15	28.27	C, CN
30-22	1200	DF200L	**193326.00**	√	C200T11FZ40A	478	208-230/460	77.0	93.6	1.15	29.53	C, CN
40-30	3600	DF200L	**193327.00**	√	C200T34FZ37A	522	208-230/460	95.0	93.0	1.15	29.53	C, CN
40-30	1800	DF200L	**193328.00**	√	C200T17FZ21A	547	208-230/460	95.0	94.1	1.15	29.53	C, CN
40-30	1200	DF225M	**193329.00**	√	C225T11FZ21A	633	208-230/460	101.0	94.1	1.15	32.95	C, CN
50-37	3600	DF200L	**193330.00**	√	C200T34FZ38A	546	208-230/460	112.0	94.1	1.15	29.53	C, CN
50-37	1800	DF225S	**193331.00**	√	C225T17FZ21A	651	208-230/460	118.0	94.5	1.15	31.97	C, CN
50-37	1200	DF250M	**193332.00**	C/A	C250T11FZ19A	670	208-230/460	120.0	94.1	1.15	36.61	C, CN
60-45	3600	225M	**193416.60**	√	C225T34FZ1A	756	208-230/460	134	94.1	1.15	31.69	C, CN
60-45	1800	225M	**193417.60**	√	C225T17FZ5A	758	208-230/460	138	95.0	1.15	32.95	C, CN
60-45	1200	280S	**193418.60**	√	C280T11FZ1A	1320	208-230/460	152	95.0	1.15	38.39	C, CN
75-55	3600	250M	**193419.60**	√	C250T34FZ1A	988	208-230/460	166	93.6	1.15	36.46	C, CN
75-55	1800	250M	**193420.60**	√	C250T17FZ2A	1170	208-230/460	174	95.4	1.15	36.46	C, CN
75-55	1200	280M	**193421.60**	√	C280T11FZ2A	1446	208-230/460	190	94.5	1.15	40.39	C, CN
100-75	3600	280S	**193422.60**	√	C280T34FZ1A	1258	208-230/460	222	94.1	1.15	38.39	C, CN
100-75	1800	280S	**193423.60**	√	C280T17FZ3A	1338	208-230/460	226	95.4	1.15	38.39	C, CN
100-75	1200	315S	**193424.60**	√	C315T11FZ1A	2020	208-230/460	226	95.0	1.15	48.82	C, CN

Shaded frame indicates cast iron construction.

Green items are premium efficient.

C/A - Check Availability.

See page 179 for B5 and B14 Flange Kits.

♥ Note listing on inside back flap.
Specifications are subject to change without notice.

IEC Metric Motors

575 Volt Metric Motors

AC Metric (IEC) Motors - B3 - Three Phase - Rigid Base

Three Phase - TEFC - B3 - Rigid Base - IP55 - 575 Volts

HP/KW	SYN RPM 60 Hz	IEC Frame	Catalogue Number	Availability	Model Number	App. Wgt. (lbs)	Voltage	F. L. Amps @ 575 V	% F.L. Eff.	Service Factor	"C" Dim. (Inches)	♥Notes
1/4-0.18	3600	D63	**192088.00**	√	C63T34FZ7	10	575	0.3	72.0	1.15	8.54	A,CN
1/4-0.18	1800	D63	**192089.00**	√	C63T17FZ4	11	575	0.4	68.0	1.15	8.54	A, CN
1/3-0.25	3600	D63	**192097.00**	√	C63T34FZ10C	11	575	0.4	72.0	1.15	8.54	A,CN
1/3-0.25	1800	D71	**192098.00**	√	C71T17FZ7C	13	575	0.6	68.0	1.15	9.45	A,CN
1/2-0.37	3600	D71	**192106.00**	C/A	C63T34FZ7	13	575	0.7	74.0	1.15	9.45	A,CN
1/2-0.37	1800	D71	**192107.00**	√	C63T17FZ4	16	575	0.7	74.0	1.15	9.45	A,CN
3/4-0.56	3600	D71	**192115.00**	√	C71T34FZ10C	15	575	0.9	74.0	1.15	9.45	A,CN
3/4-0.56	1800	D80	**192116.00**	√	C80T17FZ7B	22	575	1.0	74.0	1.15	11.10	A,CN
1-0.75	3600	D80	**192124.00**	D	C71T34FZ7	21	575	1.1	75.5	1.15	11.10	A,CN
1-0.75	3600	D80	**192267.00**	√	C80T34FZ51A	24	575	1.2	77.0	1.15	11.10	A,CN
1-0.75	1800	D80	**192125.00**	D	C71T17FZ10	28	575	1.4	82.5	1.15	11.10	A,CN
1-0.75	1800	D80	**192250.00**	√	C80T17FZ57	26	575	1.2	85.5	1.15	11.10	A,CN
1 1/2-1.1	3600	D80	**192133.00**	√	C80T17FZ7	27	575	1.6	84.0	1.15	11.10	A, CN
1 1/2-1.1	1800	D90S	**192230.00**	√	C90T17FZ19A	37	575	1.8	88.5	1.15	12.83	A,CN
2-1.5	3600	D90S	**192231.00**	√	C90T34FZ19A	38	575	2.1	85.5	1.15	12.83	A,CN
2-1.5	1800	D90L	**192232.00**	√	C90T17FZ20A	38	575	2.4	87.5	1.15	12.83	A,CN
3-2.2	3600	D90L	**192233.00**	√	C90T34FZ19	39	575	3.0	87.5	1.15	12.83	A, CN
3-2.2	1800	DF100L	**193379.00**	√	C100T17FZ47A	84	575	3.2	90.2	1.15	16.34	C, CN
4-3	3600	DF100L	**193380.00**	C/A	C100T34FZ23A	71	575	3.8	89.5	1.15	16.34	C, CN
4-3	1800	DF100L	**193381.00**	√	C100T17FZ48A	84	575	4.2	89.5	1.15	16.34	C, CN
5 1/2-4	3600	DF112M	**193382.00**	√	C112T34FZ27A	119	575	5.0	89.5	1.15	16.14	C, CN
5 1/2-4	1800	DF112M	**193383.00**	√	C112T17FZ24A	104	575	5.4	90.2	1.15	16.14	C, CN
7 1/2-5.5	3600	DF132S	**193384.00**	√	C132T34FZ51A	166	575	7.2	91.0	1.15	18.15	C,CN
7 1/2-5.5	1800	DF132S	**193385.00**	√	C132T17FZ49A	150	575	7.9	91.7	1.15	18.15	C,CN
10-7.5	3600	DF132S	**193386.00**	√	C132T34FZ52A	163	575	9.6	91.0	1.15	18.15	C,CN
10-7.5	1800	DF132M	**193387.00**	√	C132T17FZ50A	174	575	9.6	91.7	1.15	19.65	C,CN

Shaded frame indicates cast iron construction.

Green items are premium efficient.

D - Item to be discontinued once inventory is depleted.
C/A - Check availability.
See page 179 for B5 and B14 Flange Kits.

Continued On Next Page.

♥ Note listing on inside back flap.
Specifications are subject to change without notice.

Three Phase - TEFC - B3 - Rigid Base - IP55 - 575 Volts

HP/KW	SYN RPM 60 Hz	IEC Frame	Catalogue Number	Availability	Model Number	App. Wgt. (lbs)	Voltage	F. L. Amps @ 575 V	% F.L. Eff.	Service Factor	"C" Dim. (Inches)	♥Notes
15-11	3600	DF160M	**193388.00**	√	C160T34FZ68A	260	575	13.8	91.7	1.15	23.62	C,CN
15-11	1800	DF160M	**193389.00**	√	C160T17FZ49A	264	575	14.6	92.4	1.15	23.62	C,CN
15-11	1200	DF160L	**193406.00**	√	C160T11FZ45A	330	575	15.5	91.7	1.15	25.39	C,CN
20-15	3600	DF160M	**193390.00**	√	C160T34FZ69A	269	575	18.8	91.7	1.15	23.62	C,CN
20-15	1800	DF160L	**193391.00**	√	C160T17FZ50A	311	575	19.0	93.0	1.15	25.39	C,CN
20-15	1200	DF180L	**193407.00**	√	C180T11FZ22A	385	575	20.6	91.7	1.15	27.95	C,CN
25-18.5	3600	DF160L	**193392.00**	C/A	C160T34FZ70A	319	575	22.9	92.4	1.15	25.39	C,CN
25-18.5	1800	DF180M	**193393.00**	√	C180T17FZ45A	381	575	23.8	93.0	1.15	26.38	C,CN
25-18.5	1200	DF200L	**193408.00**	C/A	N200T11FZ70A	517	575	25.2	93.0	1.15	30.51	C,CN
30-22	3600	DF180M	**193394.00**	√	C180T34FZ21A	355	575	27.5	93.0	1.15	26.77	C,CN
30-22	1800	DF180L	**193395.00**	√	C180T17FZ46A	427	575	28.4	94.1	1.15	27.95	C,CN
30-22	1200	DF200L	**193409.00**	C/A	C200T11FZ23A	467	575	30.4	93.0	1.15	29.52	C,CN
40-30	3600	DF200L	**193396.00**	C/A	C200T34FZ39A	522	575	38.4	93.6	1.15	29.52	C,CN
40-30	1800	DF200L	**193397.00**	√	C200T17FZ22A	531	575	37.6	94.1	1.15	29.52	C,CN
40-30	1200	DF225M	**193410.00**	C/A	N225T11FZ22A	633	575	40.0	94.1	1.15	33.26	C,CN
50-37	3600	DF200L	**193398.00**	√	C200T34FZ40A	546	575	46.8	94.1	1.15	29.52	C,CN
50-37	1800	DF225S	**193399.00**	C/A	C225T17FZ22A	632	575	47.2	94.5	1.15	31.97	C,CN
50-37	1200	DF250M	**193411.00**	√	N250T11FZ20A	1089	575	50.0	94.1	1.15	36.61	C,CN

Shaded frame indicates cast iron construction.

Green items are premium efficient.

C/A - Check Availability.

See page 179 for B5 and B14 Flange Kits.

♥ Note listing on inside back flap.
Specifications are subject to change without notice.

Single Phase - TEFC - B3 Rigid Base - IP55 - 115/230 Volts

HP/KW	SYN RPM 60 Hz	IEC Frame	Catalogue Number	Availability	Model Number	App. Wgt. (lbs)	Voltage	F. L. Amps @ 230 V	Over-load Prot.	Service Factor	"C" Dim. (Inches)	♥Notes
1/3-.25	3600	71	**192252.00**	C/A	M71C34FZ1A	29	115/230	2.5	Man.	1.15	9.45	A, CN
1/3-0.25	1800	80	**192253.00**	C/A	M80C17FZ1A	32	115/230	2.5	Man.	1.15	11.10	A, CN
1/2-0.37	3600	80	**192254.00**	C/A	M80C34FZ2A	29	115/230	3.6	Man.	1.15	11.10	A, CN
1/2-0.37	1800	80	**192255.00**	C/A	M80C17FZ2A	32	115/230	3.4	Man.	1.15	11.10	A, CN
3/4-0.55	3600	80	**192256.00**	C/A	M80C34FZ3A	31	115/230	4.1	Man.	1.15	11.10	A, CN
3/4-0.55	1800	80	**192257.00**	C/A	M80K17FZ3A	39	115/230	3.4	Man.	1.15	11.10	A, CN
1-0.75	3600	80	**192258.00**	C/A	M80K34FZ4A	36	115/230	4.4	Man.	1.15	11.10	A, CN
1-0.75	1800	80	**192259.00**	C/A	M80K17FZ4A	38	115/230	4.5	Man.	1.15	11.10	A, CN
1 1/2-1.1	3600	80	**192260.00**	C/A	M80K34FZ5A	41	115/230	6.4	Man.	1.15	11.10	A, CN
1 1/2-1.1	1800	90	**192261.00**	C/A	M90K17FZ1A	53	115/230	6.4	Man.	1.15	12.60	A, CN

C/A - Check Availability.

See page 179 for B5 and B14 Flange kits.

♥ Note listing on inside back flap.
Specifications are subject to change without notice.

AC MOTORS (IEC) MOTORS

Single Phase - Round Body - Flanges

Metric-dimensioned 1PH motors meeting North American performance standards, including 1.15 service factor and higher efficiencies. For replacement use on machine tools, textile machinery and other equipment with metric dimensions but requiring the heavy-duty torque and performance characteristics of motors designed for use in North America. These motors are supplied round body and may require the use of a B5 or B14 flange listed below.

Features:

- IP55 weatherproof enclosure
- Class F insulation
- F2 conduit box location
- Rolled steel
- Round body

Round Body Metric (IEC) Motors - 115/230 Volts

HP/ KW	SYN RPM 60 Hz	IEC Frame	Catalogue Number	Availability	Voltage	F.L. Amps 230V	% F.L. Eff.	"C" Dim. (Inches)	B5 Flange	B14 Flange
1/3-0.25	1800	D71	**103450.00**	√	115/230	3.3	61.0	10.50	175106	175107
1/2-0.37	1800	D71	**103451.00**	√	115/230	4.0	66.0	11.13	175106	175107
3/4-0.56	1800	D80	**103449.00**	√	115/230	5.4	70.0	12.25	175108	175109

Flange and Face Kits

An advantage of Regal's modular design concept is the possible use of a different diameter B5 flange or B14 face than is normally assigned to a motor by IEC dimensional standards. This flexibility makes it possible to accommodate a wide variety of gear reducers, pumps and similar close coupled motor mounted loads.

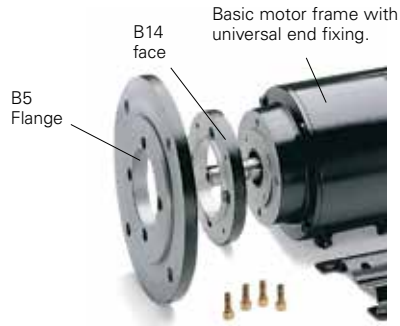

B5 Flange Kits (For Motors Listed Above)

IEC Frame	Catalogue Number	App. Wgt. (lbs)	BD Flange Dia. (mm)	AK Register (mm)	BF Hole (mm)	AJ Bolt Circle (mm)
71	**175106.00**	2	160	110	9	130
80	**175108.00**	3	200	130	12	165

Specifications are subject to change without notice.

B14 Face Kits (For Motors Listed Above)

IEC Frame	Catalogue Number	App. Wgt. (lbs)	BD Flange Dia. (mm)	AK Register (mm)	BF Hole (mm)	AJ Bolt Circle (mm)
71	**175107.00**	1	105	70	6	85
80	**175109.00**	1	120	80	6	100

Specifications are subject to change without notice.

Specifications:

- Includes parts to convert B3 rigid motors to either a B5 or B14 flange

Flange Kits - IEC Motors

IEC Frame	RPM	B5 Flange Kit	B14 Flange Kit
63	3600	**175850.00**	**175851.00**
63	1800	**175850.00**	**175851.00**
63	1200	**175850.00**	**175851.00**
71	3600	**175852.00**	**175853.00**
71	1800	**175852.00**	**175853.00**
71	1200	**175852.00**	**175853.00**
80	3600	**175854.00**	**175855.00**
80	1800	**175854.00**	**175855.00**
80	1200	**175854.00**	**175855.00**
90	3600	**175856.00**	**175857.00**
90	1800	**175856.00**	**175857.00**
90	1200	**175856.00**	**175857.00**
100	3600	**175810.00**	**175817.00**
100	1800	**175810.00**	**175817.00**
100	1200	**175810.00**	**175817.00**
112	3600	**175811.00**	**175818.00**
112	3600	**175827.00Δ**	**175832.00Δ**
112	1800	**175811.00**	**175818.00**
112	1800	**175827.00Δ**	**175832.00Δ**
112	1200	**175811.00**	**175817.00**
132	3600	**175812.00**	**175819.00**
132	3600	**175828.00Δ**	**175833.00Δ**
132	1800	**175812.00**	**175819.00**
132	1200	**175812.00**	**175819.00**
160	3600	**175990.00**	**175991.00**
160	3600	**175829.00Δ**	**175834.00Δ**
160	1800	**175990.00**	**175991.00**
160	1200	**175990.00**	**175991.00**
180	3600	**175890.00**	
180	3600	**175830.00Δ**	
180	1800	**175890.00**	
180	1200	**175890.00**	
200	3600	**175994.00**	
200	3600	**175831.00Δ**	
200	1800	**175994.00**	
200	1200	**175994.00**	
225	3600	**175995.00**	
225	1800	**175995.00**	
225	1200	**175995.00**	
250	1200	**175619.00**	

Δ For IEC motors built after June 2011.
Specifications are subject to change without notice.

IEC Metric Motors

DC Metric Motors
Metric (IEC) Frame - SCR Rated - IP54

Application Notes:

Please note that one or more of the mounting kits must be used with IEC motors of these frame sizes. See listing on page 182 for B5 flange and B14 face kits and B3 rigid base kits.

General Specifications:

- Built to IEC 34-1 electrical and mechanical standards
- IEC 63 and smaller frames supplied with an integral B5 flange or B14 face
- Optional B3 rigid base kit available
- IEC 71 frame and larger can be field modified for B3 rigid base, B5 flange, or B14 face construction using conversion kits
- Tachometer mounting kits available for 71 frame only

Features:

- Terminal board provided for connections
- All metric fasteners
- Easy brush access for field service
- Oversized brushes for extended life
- High strength rolled steel frame
- Die cast aluminum endshields with steel bearing inserts
- Permanently lubricated sealed ball bearings
- Reversible rotation
- Simple 2-lead connection
- Convenient wiring access
- Tachometer mounting kits available for 71 frame only

180 Volts - Totally Enclosed - B5 Flange

KW/HP	Full Load RPM	IEC Frame	Catalogue Number	Availability	Model Number	App. Wgt. (lbs)	DC Voltage	Control Volts AC Input	F.L. Amps @ 180 VDC	"C" Dim. (Inches)	♥Notes
0.06/1/12	1750	56	**M1130146.00**	C/A	CIM34D18ND1	8	180	230	0.5	6.24	S, US, 12
0.09/1/8	3000	56	**M1130150.00**	√	CIM34D30ND1	9	180	230	0.7	6.74	S, US, 12
0.09/1/8	1750	56	**M1130147.00**	√	CIM34D18ND2	10	180	230	0.7	7.55	S, US, 12
0.12/1/6	3000	56	**M1130151.00**	√	CIM34D30ND2	9	180	230	0.9	7.55	S, US, 12
0.12/1/6	1750	63	**M1130148.00**	√	CIM34D18FD1	7	180	230	0.9	8.30	S, US, 13
0.18/1/4	3000	63	**M1130152.00**	√	CIM34D30ND3	11	180	230	1.3	8.78	S, US, 12
0.18/1/4	1750	63	**M1130149.00**	√	CIM34D18FD2	11	180	230	1.3	9.50	S, US, 13
0.25/1/3	3000	63	**M1130153.00**	√	CIM34D30FD1	13	180	230	1.7	9.50	S, US, 13

These motors have accommodations for B3 base mountings with the kits.

C/A - Check Availability.

Note 12: TENV
Note 13: TEFC

♥ Note listing on inside back flap.
Specifications are subject to change without notice.

IEC Metric Motors

DC Metric Motors

Metric (IEC) Frame - SCR Rated - IP54

180 Volts - Totally Enclosed - B14 Flange

KW/HP	Full Load RPM	IEC Frame	Catalogue Number	Availability	Model Number	App. Wgt. (lbs)	DC Voltage	Control Volts AC Input	F.L. Amps @ 180 VDC	"C" Dim. (Inches)	♥Notes
0.06/1/12	3000	56	**M1110024.00**	√	980.542	6	180	230	0.7	7.13	S, US, 12
0.06/1/12	1750	56	**M1130136.00**	√	CIM34D18NC5	10	180	230	0.6	6.24	S, US, 12
0.09/1/8	3000	56	**M1130140.00**	√	CIM34D30NC1	9	180	230	0.7	6.74	S, US, 12
0.09/1/8	1750	56	**M1130137.00**	√	CIM34D18NC6	14	180	230	0.7	7.55	S, US, 12
0.12/1/6	3000	56	**M1130141.00**	√	CIM34D30NC2	10	180	230	0.9	7.55	S, US, 12
0.12/1/6	1750	63	**M1130138.00**	√	CIM34D18FC1	8	180	230	0.9	8.30	S, US, 13
0.18/1/4	3000	63	**M1130142.00**	√	CIM34D30NC3	10	180	230	1.3	8.78	S, US, 12
0.18/1/4	1750	63	**M1130139.00**	√	CIM34D18FC2	10	180	230	1.3	9.50	S, US, 13
0.25/1/3	3000	63	**M1130143.00**	√	CIM34D30FC1	12	180	230	1.7	9.50	S, US, 13

Except for M1110024.00, these motors have accommodations for B3 base mountings with the kits.

Note 12: TENV
Note 13: TEFC

♥ Note listing on inside back flap.
Specifications are subject to change without notice.

180 Volts - Totally Enclosed - Round Body

KW/HP	Full Load RPM	IEC Frame	Catalogue Number	Availability	Model Number	App. Wgt. (lbs)	DC Voltage	Control Volts AC Input	F.L. Amps @ 180 VDC	"C" Dim. (Inches)	♥Notes
0.25/1/3	1750	71	**098014.00**	√	C142D17FT1	26	180	230	1.7	11.28	S, US
0.37/1/2	3000	71	**098016.00**	√	C142D34FT1	21	180	230	2.5	10.78	S, US
0.37/1/2	1750	71	**098015.00**	√	C142D17FT2	29	180	230	2.5	11.78	S, US
0.55/3/4	3000	71	**098017.00**	√	C142D34FT2	27	180	230	3.6	11.78	S, US
0.55/3/4	1750	80	**108369.00**	√	C14D17FT1	34	180	230	3.5	14.15	S, US
0.75/1	3000	80	**108372.00**	√	C14D34FT1	45	180	230	4.9	14.15	S, US
0.75/1	1750	80	**108370.00**	√	C14D17FT2	48	180	230	4.6	15.15	S, US
1.1/1 1/2	3000	80	**108373.00**	√	C14D34FT2	47	180	230	7.1	15.15	S, US
1.1/1 1/2	1750	80	**108371.00**	√	C14D17FT3	52	180	230	7.0	17.14	S, US
1.1/1 1/2	1750	90L	**118007.00**	√	CI6D17FT1	64	180	230	7.5	18.97	S, US
1.5/2	3000	90L	**118009.00**	√	CI6D34FT1	72	180	230	10.0	18.47	S, US
1.5/2	1750	90L	**118008.00**	√	CI6D17FT2	84	180	230	9.5	20.47	S, US
2.2/3	3000	90L	**118010.00**	√	CI6D34FT2	77	180	230	16.0	19.47	S, US
2.2/3	1750	112M	**118014.00**	√	CI6D17FK1	93	180	230	14.0	21.79	S, US

IMPORTANT: These round body motors require either a B3 rigid base, B14 face or B5 flange kit. Catalogue number 118014.00 comes complete with IEC 112 B14 face and B3 foot; shaft diameter is 24mm.

♥ Note listing on inside back flap.
Specifications are subject to change without notice.

IEC Metric Motors

Metric (IEC) Frame - SCR Rated

(For DC metric motors only)
All motors are stocked with provisions to accommodate B3 foot mountings with the packages noted below.

B3 Foot Mounting Kits

IEC Frame	Catalogue Number
56	**175142.00**
63	**175143.00**
71	**175144.00**
80	**175145.00**
80	**175784.00†**
90	**175146.00**

† For endshield mounted brush cover motors.

Flange Kits

Flange and face kits for DC metric (IEC) frame motors. An advantage of Regal's modular design concept is the possible use of a different diameter B5 flange or B14 face than is normally assigned to a motor by IEC dimensional standards. This flexibility makes it possible to accommodate a wide variety of gear reducers, pumps and similar close coupled motor mounted loads.

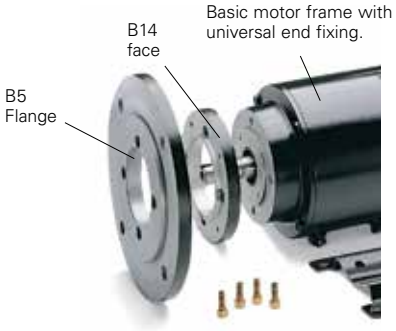

B5 Flange Kits (For DC Metric Motors Only)

IEC Frame	Catalogue Number	App. Wgt. (lbs)	AK Register (mm)	BF Hole (mm)	AJ Bolt Circle (mm)	BD Flange Dia. (mm)
71	**175106.00**	2	110	9	130	160
80	**175108.00**	3	130	12	165	200
90S/90L	**175108.00**	3	130	12	165	200
100L/112M	**175137.00**	5	180	15	215	250

Specifications are subject to change without notice.

B14 Face Kits (For DC Metric Motors Only)

IEC Frame	Catalogue Number	App. Wgt. (lbs)	AK Register (mm)	BF Hole (mm)	AJ Bolt Circle (mm)	BD Flange Dia. (mm)
71	**175107.00**	1	70	6	85	105
80	**175109.00**	1	80	6	100	120
90S/90L	**175129.00**	1	95	6	115	140
100L/112M	**175130.00**	2	110	6	130	160

Specifications are subject to change without notice.

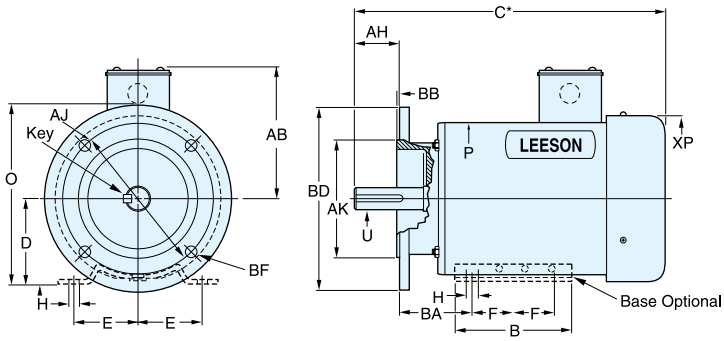

*For overall length, see motor listing.

IEC Frame Dimensions (Millimeters)

IEC Frame	Mounting					Shaft						B14 Face/B5 Flange					General			
	2E	2F	BA	D	H	U	AH✧	KEY	S	R	TAP	AJ	AK	BD	BF	BB	AB	XP	B	O
56	90	71	36	56	6	9	20	15	3	7.0	M3	65 100	50 80	80 120	M5 7	2.5 2.5	83	96	90	99
63	100	80	40	63	7	11	23	19	4	9.0	M4	75 115	60 95	90 140	M5 9	2.5 3.0	116	96	96	108
71	112	90	45	71	7	14	30	26	5	11.5	M5	85 130	70 110	105 160	M6 9	2.5 3.5	114	130	105	132
80	125	100	50	80	10	19	40	33	6	16.0	M6	100 165	80 130	120 200	M6 12	3.0 3.5	124	149	127	151
90S	140	100	56	90	10	24	50	36	8	20.5	M8	115 165	95 130	140 200	M8 12	3.0 3.5	135	182	152	173
90L	140	125	56	90	10	24	50	36	8	20.5	M8	115 165	95 130	140 200	M8 12	3.0 3.5	135	182	152	173
100L	160	140	63	100	12	28	60	41	8	24.5	M10	130 215	110 180	160 250	M8 15	3.5 4.0	135	182	176	173
112M	190	140	70	112	12	28	60	41	8	24.5	M10	130 215	110 180	160 250	M8 15	3.5 4.0	162	231	176	225

✧ Without face or flange, AH shaft dimension is 12mm longer.

Specifications are subject to change without notice.

IEC Metric Motors

DC Metric Motors

Low Voltage - DC Metric - IP 54

General Specifications:

- Built to IEC 34-1 electrical and mechanical standards
- IEC 63 and smaller frames supplied with an integral B5 flange or B14 face
- Optional B3 rigid base kit available
- IEC 71 frame and larger can be field modified for B3 rigid base, B5 flange, or B14 face construction using conversion kits
- Tachometer mounting kits available for 71 and 80 frames only

Features:

- Cast aluminum conduit box
- Terminal board provided for connections
- All metric fasteners
- Easy brush access for field service
- Oversized brushes for extended life
- High strength rolled steel frame
- Die cast aluminum endshields with steel bearing inserts
- Permanently lubricated sealed ball bearings
- Reversible rotation
- Simple 2-lead connection
- Convenient wiring access
- Tachometer mounting kits available for 71 and 80 frames only

24 Volts - TEFC/TENV - Modular Design

HP/KW	Full Load RPM	IEC Frame	Catalogue Number	Availability	Model Number	App. Wgt. (lbs)	DC Voltage	F.L. Amps DC	"C" Dim. (Inches)	♥Notes
1/12/0.06	3000	56	**M1110025.00**	√	980.543	5	24	3.3	6.13	S, US, 12, >
1/12/0.06	1750	56	**M1110026.00**	√	980.544	9	24	3.4	7.13	S, US, 12, >
1/4/0.18	3000	63	**M1130206.00**	√	CIM34D30FD2	9	24	11.0	7.75	S, US, ☐
1/4/0.18	3000	63	**M1130296.00**	√	CIM34D30FC7	10	24	11.0	7.75	S, US, >
1/4/0.18	1750	63	**M1130207.00**	√	CIM34D18FD6	13	24	10.0	8.75	S, US, ☐
1/4/0.18	1750	63	**M1130297.00**	√	CIM34D18FC10	9	24	10.0	8.75	S, US, >
1/4/0.18	1750	71	**098065.00**	√	CI42D17FT6	22	24	11.0	10.77	S, US
1/2/0.37	3000	71	**098066.00**	√	CI42D34FT7	27	24	20.0	11.27	S, US
1/2/0.37	1750	71	**098067.00**	√	CI42D17FT7	29	24	20.0	12.27	S, US
1/0.75	3000	80	**108456.00**	√	CI4D34FT5	33	24	40.0	13.65	S, US, 35
1/0.75	1750	80	**108455.00**	√	CI4D17FT6	35	24	39.0	14.15	S, US, 35
1 1/2/1.1	3000	80	**108457.00**	√	CI4D34FT6	43	24	65.0	15.64	S, US, 35
2/1.5	3000	80	**108458.00**	√	CI4D34FT7	52	24	78.0	17.14	S, US, 35

Note 12: TENV
Note 35: Terminal bolts at 12:00

IMPORTANT: IEC 71 and 80 frame motors in this chart are round body and require either B14 face, B5 flange or B3 foot from kits shown on page 182.

☐ Dedicated B5 flange
> Dedicated B14 face

♥ Note listing on inside back flap.
Specifications are subject to change without notice.

IEC Metric Motors

DC Metric Motors

Low Voltage Commercial Duty Metric (IEC) Frame Motors

Features:

- Specially designed low voltage DC for use in OEM applications
- Combination of features and low cost make these ideal for many uses
- IP44(TENV) enclosure
- Dedicated B14 face mount
- Rated S1 for continuous duty

12, 24 & 90 Volts - TENV - B14 Mount

HP	Full Load RPM	IEC Frame	Catalogue Number	Availability	Model Number	App. Wgt. (lbs)	DC Voltage	F.L. Amps DC	♥Notes
1/15	3000	56	**980.159**	√	980.159	2.3	12	6.4	S, US
1/15	3000	56	**980.143**	√	980.143	4.0	24	3.2	S, US
1/15	3000	56	**980.549**	√	980.549	2.3	90	0.8	S, US
1/8	3000	56	**970.600**	√	970.600	3.0	12	12.0	S, US
1/8	3000	56	**970.601**	√	970.601	7.0	24	5.3	S, US
1/8	3000	56	**970.576**	√	970.576	3.0	90	1.2	S, US
1/6	3000	56	**970.620**	√	970.620	5.0	12	13.1	S, US
1/6	3000	56	**970.621**	√	970.621	7.0	24	6.8	S, US
1/6	3000	56	**970.577**	√	970.577	3.5	90	1.6	S, US

♥ Note listing on inside back flap.
Specifications are subject to change without notice.

The formulas for success.

Once you get to know the LEESON® IEC motor product line you'll find a world of applications waiting for these solutions. To know the product is one thing—understanding the technical relationships with NEMA® motors is another. We are confident that the formulas below will help you when specifying a LEESON Passport Series IEC motor.

HORSEPOWER AND KILOWATTS	**HP → kW:** HP * 0.746 = kW **kW → HP:** kW * 1.3410 = HP	**Example: HP to kW** Motor: 25HP NEMA (25 * 0.746) = 18.7kW
FULL LOAD TORQUE AND HORSEPOWER	**Full Load Torque:** FL TRQ = (HP * 5252) / RPM **Horsepower:** HP = (TRQ * FL RPM) / 5252	**Example: Full Load Torque** Motor: 50HP, 1800 RPM (50 * 5252) / 1800 = 145.9 ft-lbs
NEWTON METERS AND FOOT POUNDS	**Newton Meters:** Nm = √3 * ft-lbs **Foot Pounds:** LB-FT = 1.36 * Nm *NOTE: Torque units = ft-lbs*	**Example: Ft-Lbs to Nm** Motor: 10HP, 1800 RPM = 30 ft-lbs 30 * 1.36 = 40.8 Nm
KVA/HP AND LOCKED ROTOR AMPS (STARTING AMPS)	**LRA:** LRA = (KVA/HP * 1000 * HP) / (V * √3) **KVA/HP:** KVA/HP = (√3 * V * LRA) / (1000 * HP)	**Example: LRA** Motor: 93kW (125HP), NEMA Code G, 460V (6.29 * 1000 * 125) / (460 * 1.73205) = 987 Amps **Example: KVA/HP** Motor: 93kW (125HP), NEMA Code G, 460V (1.73205 * 460 * 987) / (1000 * 125) = 6.29
KILOVOLT-AMPS AND 3-PHASE FULL LOAD AMPS	**KVA:** KVA = √3 * V * FLA / 1000 **3-Phase FLA:** FLA = (746 * HP) / (Volts * Eff. * PF * √3)	**Example: 3-Phase FLA** Motor: 93kW (125HP), 95.4% Efficiency, 86.0% PF (746 * 125) / (460 * .954 * .86 * 1.73205) = 143

NEMA is a trademark of National Electrical Manufacturers Association and is not owned or controlled by Regal Beloit Corporation.

DC Motors

- NEMA® DC, explosion proof, Sub-FHP, washdown, IEC and low voltage motors available
- Permanent magnet designs
- PWM or SCR rated and low voltage input voltage designs
- Removable bolt-on base
- Oversized brushes for long brush life
- Easy access to brushes
- Constant torque throughout speed range
- DC Controls available to change the speed of the motors

Applications:
DC motors are typically used in applications requiring motor speed adjustment, constant torque throughout the speed range and reversing capabilities. Applications include: pumps, conveyors, turntables, textile machinery, treadmills, reeling equipment, sports equipment and medical equipment.

NEMA is a trademark of National Electrical Manufacturers Association and is not owned or controlled by Regal Beloit Corporation.

Mechanical / Electrical Features:

- Brush holder design provides easy access to brushes
- Large oversized brushes assure long brush life
- Removable bolt-on base
- NEMA® C face designs
- 115 or 230 volt input power ratings – 90 / 180 volt output
- Capable of dynamic braking
- PWM or SCR type controller rated
- High starting torque
- Permanently lubricated sealed bearings
- LEESON® SCR controls available to power motors
- Higher HP and speed achievable using PWM type DC controls
- UL and CSA listed
- Meets NEMA MG1 standards
- Dynamically balanced armatures
- 30:1 constant torque operation

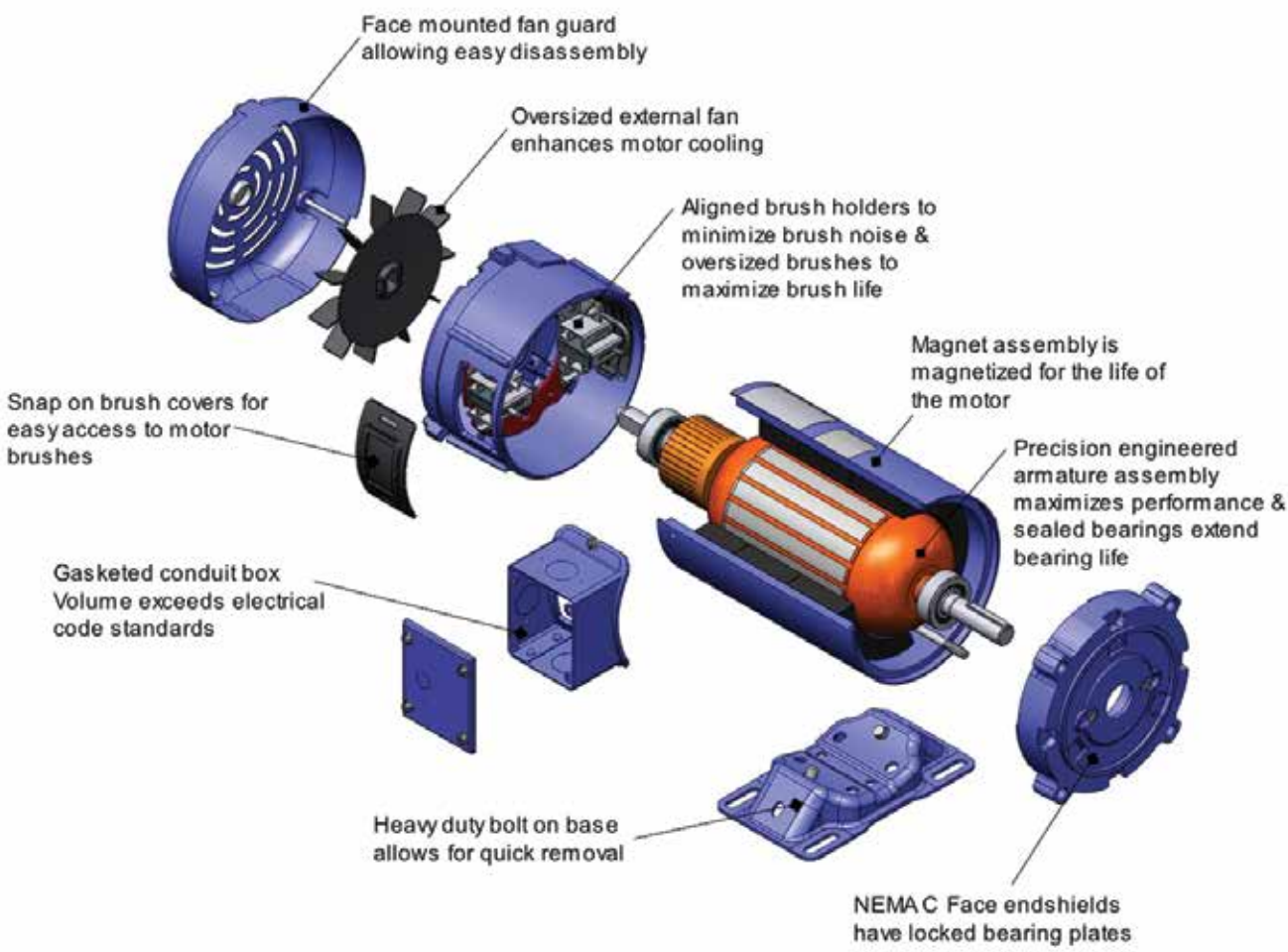

NEMA is a trademark of National Electrical Manufacturers Association and is not owned or controlled by Regal Beloit Corporation.

DC Motors

NEMA® Frame - SCR Rated

TEFC - SCR Rated 90 & 180 Volts
NEMA 56C & 145TC - C Face With Removable Base

HP	Full Load RPM	NEMA® Frame	Catalogue Number	Availability	Model Number	App. Wgt. (lbs)	Arm. Volts DC	Control Volts AC Input	F.L. Amps DC	"C" Dim. (Inches)	♥Notes
1/4	1750	SS56C	**098002.00**	√	C42D17FK2	21	90	115	2.5	10.81	S, US
1/4	1750	SS56C	**098003.00**	√	C42D17FK3	25	180	230	1.4	11.31	S, US
1/3	1750	SS56C	**098004.00**	√	C42D17FK4	26	90	115	3.5	11.31	S, US
1/3	1750	SS56C	**098005.00**	√	C42D17FK5	26	180	230	1.7	11.31	S, US
1/3	1140	S56C	**109098.00**	C/A	C4D11FK5	32	90	115	3.5	12.81	S, US
1/2	2500	SS56C	**098006.00**	√	C42D28FK1	23	90	115	5.0	10.81	S, US
1/2	2500	SS56C	**098007.00**	√	C42D28FK2	25	180	230	2.5	10.81	S, US
1/2	1750	SS56C	**098000.00**	√	C42D17FK1	25	90	115	5.0	11.81	S, US
1/2	1750	S56C	**108014.00**	√	C4D17FK1	32	90	115	5.0	12.82	S, US
1/2	1750	SS56C	**098008.00**	√	C42D17FK6	25	180	230	2.5	11.81	S, US
1/2	1750	S56C	**108015.00**	√	C4D17FK2	31	180	230	2.5	12.82	S, US
1/2	1140	S56C	**109099.00**	√	C4D11FK6	40	90	115	5.0	14.32	S, US
3/4	2500	SS56C	**098009.00**	√	C42D28FK3	29	90	115	7.6	11.81	S, US
3/4	2500	S56C	**108016.00**	√	C4D28FK3	32	90	115	7.6	12.82	S, US
3/4	2500	SS56C	**098010.00**	√	C42D28FK4	25	180	230	3.8	11.81	S, US
3/4	2500	S56C	**108017.00**	√	C4D28FK4	32	180	230	3.8	12.82	S, US
3/4	1750	SS56C	**098032.00**	√	C42D17FK7	34	90	115	7.6	13.81	S, US
3/4	1750	S56C	**108018.00**	√	C4D17FK3	35	90	115	7.5	13.82	S, US
3/4	1750	SS56C	**098069.00**	√	C42D17FK11	34	180	230	3.8	13.81	S, US
3/4	1750	S56C	**108019.00**	√	C4D17FK4	35	180	230	3.8	13.82	S, US
3/4	1140	S56C	**109100.00**	√	C4D11FK7	49	90	115	7.5	15.82	S, US
1	2500	S56C	**108020.00**	√	C4D28FK5	37	90	115	10.0	13.32	S, US
1	2500	S56C	**108021.00**	√	C4D28FK6	38	180	230	5.0	13.82	S, US
1	1750	S56C	**108022.00**	√	C4D17FK5	40	90	115	10.0	14.82	S, US
1	1750	S56C	**108023.00**	√	C4D17FK6	41	180	230	5.0	14.81	S, US
1	1140	145TC	**128023.00**	C/A	C145D11FK1	82	90	115	11.0	18.84	S, US
1 1/2	2500	S56C	**108265.00**	√	C4D28FK11	46	180	230	7.5	15.32	S, US
1 1/2	1750	S56C	**108092.00**	√	C4D17FK10	51	180	230	7.6	16.82	S, US
1 1/2	1750	S56/145TC	**108262.00**	√	C4D17FK19	52	180	230	7.6	17.39	S, US, 8
1 1/2	1750	145TC	**128000.00**	√	C145D17FK2	73	180	230	7.5	18.34	S, US
2	2500	S56/145TC	**108266.00**	√	C4D28FK12	54	180	230	8.6	17.89	S, US, 8
2	1750	145TC	**128010.00**	√	C145D17FK3	86	180	230	9.5	19.34	S, US
2	1750	182/145TC	**128001.00**	√	C182D17FK3	87	180	230	9.5	19.34	S, US, 61
3	1750	182/145TC	**108502.00**	√	C182D17FK2	88	180	230	14.0	21.75	S, US, 61

If base is removed, do not reinstall bolts without using washers to compensate for thickness of base.

C/A - Check Availability.

♥ Note listing on inside back flap.
Specifications are subject to change without notice.

NEMA is a trademark of National Electrical Manufacturers Association and is not owned or controlled by Regal Beloit Corporation.

LEESON®

DC Motors

NEMA® Frame - SCR Rated

TEFC - SCR Rated 90 & 180 Volts
NEMA 56C - C Face Less Base†

HP	Full Load RPM	NEMA® Frame	Catalogue Number	Availability	Model Number	App. Wgt. (lbs)	Arm. Volts DC	Control Volts AC Input	F.L. Amps DC	"C" Dim. (Inches)	♥Notes
1/4	1750	SS56C	**098377.00**	√	C42D17FC29	19	90	115	2.5	10.81	S, US
1/3	1750	SS56C	**098378.00**	√	C42D17FC30	23	90	115	3.5	11.31	S, US
1/2	1750	SS56C	**098379.00**	√	C42D17FC31	25	90	115	5.0	11.81	S, US
3/4	1750	SS56C	**098380.00**	√	C42D17FC32	38	90	115	7.6	13.81	S, US
1	1750	S56C	**109096.00**	√	C4D17FC42	39	90	115	10.0	14.82	S, US
1	1750	S56C	**109097.00**	√	C4D17FC43	39	180	230	5.0	14.82	S, US

† No tapped holes provided for attaching a bolt-on base.

♥ Note listing on inside back flap.
Specifications are subject to change without notice.

Tachometer kits includes all necessary hardware needed to mount on stock TEFC SCR motors. Consists of machined cast fan cover, coupling and hardware. Does not include tachometer. Tach adapter kit is not suitable for catalog number 108502.00.

Tachometer Mounting Kits For DC Motors

Tachometer Type	NEMA Frame	IEC Frame	Catalogue Number	App. Wgt. (lbs)
GE®* 5PY Series	SS56	71	**175156.00**	5
	56/145	90	**175158.00**	5
Servo-tek®* SA740 Series	SS56	71	**175157.00**	8
	56/145	90	**175159.00**	8

No tachometer mounting kit available for S56C motors.

Specifications are subject to change without notice.

DC motors in NEMA S56C frame may be converted to 48 base using the following:

Modification Kits

Frame	Catalogue Number
S56C	**175080.00**[1]

[1] Addition of base kit will result in non-NEMA BA dimension of 2 3/4".

Motors with S56C or SS56C frame sizes may be converted to 42/48 C face using the following:

Frame	Catalogue Number
S56C	**175082.00**[2]
S56C	**175802.00**[3]

[2] Addition of C face kit will result in conduit box located at 1 o'clock facing lead end.

[3] For S56 frame endshield mounted brush cover motors.
Specifications are subject to change without notice.

*Servo-Tek is believed to be a registered trademark or trade name of The March Bellofram Group of Companies and is not owned or controlled by Regal Beloit Corporation.

*GE is believed to be a registered trademark or trade name of General Electric and is not owned or controlled by Regal Beloit Corporation.

NEMA is a trademark of National Electrical Manufacturers Association and is not owned or controlled by Regal Beloit Corporation.

DC Motors

Explosion-Proof - SCR Rated

Application Notes:

These motors must be applied in accordance with the National Electrical Code, Article #500. For a listing of explosive agents, consult NFPA Publication 497M.

General Specifications:

- Approved for application in hazardous environments where certain explosive gases or materials are present

Features:

- Rugged mechanical construction
- Meets all safety requirements
- UL and CSA listed
- Leads exit thru 3/4"-14 NPT pipe nipple at top of frame opposite shaft end
- Optional Conduit box available - use Kit 175026.00
- Pilot duty thermostats - standard (connect to SCR control)
- Thermostats rated for continuous duty with full wave SCR (thyristor) controls
- Double shielded, pre-lubricated ball bearings - standard
- Easy brush access for field service

Explosion-Proof - Class I, Groups C & D – Class II, Groups F & G 90 & 180 Volts - TENV - C Face With Removable Base

HP	Full Load RPM	NEMA® Frame	Catalogue Number	Availability	Model Number	App. Wgt. (lbs)	Arm. Volts DC	Control Volts AC Input	F.L. Amps DC	"C" Dim. (Inches)	♥Notes
1/3	1750	S56C	**118015.00**	√	C6D17EK1	27	90	115	3.5	13.41	S, US
1/2	1750	S56C	**118016.00**	√	C6D17EK2	30	90	115	4.7	14.41	S, US
1/2	1750	S56C	**118017.00**	√	C6D17EK3	32	180	230	2.5	14.41	S, US
3/4	1750	S56C	**118018.00**	√	C6D17EK4	40	90	115	7.1	16.41	S, US
3/4	1750	S56C	**118019.00**	√	C6D17EK5	36	180	230	3.3	16.41	S, US

♥ Note listing on inside back flap.
Specifications are subject to change without notice.

Low Voltage DC Explosion Proof Motors

- Division 1 and 2, Class 1 (Groups C and D), Class II (Groups F and G) and Class III
- Removable base
- Class H insulation
- Optional conduit box available - use kit 175026.00

12 and 24 Volts - TENV - Rigid C Face

HP	Full Load RPM	NEMA Frame	Catalogue Number	Availability	Model Number	App. Wgt. (lbs)	Arm. Volts DC	F.L. Amps DC	Torque (lb-in)	"C" Dim. (Inches)	♥Notes
1/3	1750	56C	**118054.00**	√	C6D17EK6	19	12	28.0	12.0	10.38	S, US
1/3	1750	56C	**118055.00**	√	C6D17EK7	24	24	13.4	12.0	10.38	S, US
3/4	1750	56C	**118056.00**	√	C6D17EK8	33	24	28.2	27.0	13.38	S, US

♥ Note listing on inside back flap.
Specifications are subject to change without notice.

NEMA is a trademark of National Electrical Manufacturers Association and is not owned or controlled by Regal Beloit Corporation.

NEMA® Frame - Washguard® Duty Motor - 90 & 180 Volts

General Specifications:

- Extended life in wet, high humidity applications - IP55
- Design repels water from entering motor
- Internal components protected against rust and corrosion
- Frame, base, endshields, armature and interior components protected by enamel and polyester compounds of outstanding adhesion and resistance to moisture, acids, alkalies and oil

Features:

- 303 stainless steel shaft resists corrosion
- Lubricated spring loaded contact seals prevent moisture from entering the motor
- Patented "V" ring Forsheda®* seal deflects water
- Double sealed, oversized bearings with high temp lubricant
- Exterior and interior components protected against moisture, acids, alkalies and oil
- Cast conduit box for superior sealing includes:
  - Threaded entrance
  - Drain holes
  - Nitrile gaskets
- 304 stainless steel conduit box cover and fan cover
- Re-positionable drain plugs for use in multiple mounting positions
- Nylon seals at bolt heads for superior sealing
- Machined fits throughout
- Stainless steel data plate
- Chemically inert, static free fan with positive mounting ensures it won't move
- USDA approved white epoxy finish

90 & 180 Volts - Totally Enclosed - C Face With Removable Base

HP	Full Load RPM	NEMA® Frame	Catalogue Number	Availability	Model Number	App. Wgt. (lbs)	Arm. Volts DC	Control Volts AC Input	F.L. Amps DC	"C" Dim. (Inches)	♥Notes
1/4	1750	S56C	**108423.00**	√	C4D17VK9	26	90	115	2.7	10.69	S, US
1/4	1750	SS56C	**098375.00**	CA	C42D17VK1	21	180	230	1.4	10.22	S, US
1/3	1750	S56C	**108424.00**	√	C4D17VK10	29	90	115	3.5	11.69	S, US
1/3	1750	SS56C	**098376.00**	C/A	C42D17VK2	22	180	230	1.7	10.22	S, US
1/2	1750	S56C	**108226.00**	√	C4D17VK1	41	90	115	5.0	13.69	S, US
1/2	1750	S56C	**108227.00**	√	C4D17VK2	46	180	230	2.5	13.69	S, US
3/4	1750	S56C	**108228.00**	√	C4D17VK3	54	90	115	7.0	15.69	S, US
3/4	1750	S56C	**108229.00**	√	C4D17VK4	42	180	230	3.7	15.69	S, US
1	1750	S56C	**108230.00**	√	C4D17WK1	40	90	115	10.0	15.81	S, US
1	1750	S56C	**108231.00**	√	C4D17WK2	42	180	230	5.0	14.81	S, US
1 1/2	1750	S56C	**108232.00**	√	C4D17WK3	53	180	230	7.6	15.81	S, US

C/A - Check Availability.

♥ Note listing on inside back flap.
Specifications are subject to change without notice.

Washguard® Motor - IEC Frame - TENV IP55

180 Volts - TENV - B5 Flange With Removable Base

HP/KW	Full Load RPM	IEC Frame	Catalogue Number	Availability	Model Number	App. Wgt. (lbs)	Arm. Volts DC	Control Volts AC Input	F.L. Amps DC	"C" Dim. (Inches)	♥Notes
1/2 - .37	1750	71	**098040.00**	C/A	C42D17VD1	22	180	230	2.5	10.69	S, US
3/4 - .55	1750	80	**108407.00**	D	C4D17VD1	52	180	230	3.5	16.02	S, US

If base is removed, do not reinstall bolts without using washers to compensate for the thickness of base. These Washguard motors are modular design but stocked with B5 flange and B3 foot. The foot is removable. The B5 flange can be replaced with a B14 face or other diameter B5 flanges noted on page 196.

D - Item to be discontinued when inventory is depleted.
C/A - Check Availability.

♥ Note listing on inside back flap.
Specifications are subject to change without notice.

*Forsheda is believed to be the trademark or trade name of Trelleborg Forsheda Sweden AB and is not owned or controlled by Regal Beloit Corporation.

NEMA is a trademark of National Electrical Manufacturers Association and is not owned or controlled by Regal Beloit Corporation.

DC Motors

Sub-FHP - SCR Rated

General Specifications:

Precision subfractional horsepower DC permanent magnet motors designed for use with full wave SCR controls for adjustable speed applications requiring dynamic braking and constant torque throughout the speed range.

Features:

- Compact, space saving design
- Ball bearing construction
- Long life brushes
- External access to brushes allows for easy replacement further prolonging motor life
- Conduit box standard on 31 and 34 frame models
- Continuous duty with full wave un-filtered rectified SCR (thyristor) controls
- Linear speed torque characteristics throughout the speed range
- High starting torques
- Reversible rotation

90 & 180 Volts - TENV/TEFC - Square Flange or C Face

HP	Full Load RPM	NEMA® Frame	Catalogue Number	Availability	Model Number	App. Wgt. (lbs)	Arm. Volts DC	Control Volts AC Input	F.L. Amps DC	♥Notes
1/25	3500	25AS	**M1110014.00**	√	980.533	3	90	115	0.5	S, US, 12
1/25	1750	25CS	**M1110003.00**	√	980.535	3	90	115	0.7	S, US, 12
1/15	3500	25CS	**M1110015.00**	√	980.539	5	90	115	0.7	S, US, 12
1/15	1750	31BS	**M1120013.00**	√	CM31D17NZ1	5	90	115	0.8	S, US, 12
1/15	1750	31BS	**M1120039.00**	√	CM31D17NZ5	7	180	230	0.4	S, US, 12
1/10	3500	31BS	**M1120060.00**	√	CM31D35NZ4	5	90	115	1.3	S, US, 12
1/10	1750	31CS	**M1120014.00**	√	CM31D17NZ2	7	90	115	1.1	S, US, 12
1/10	1750	31CS	**M1120041.00**	√	CM31D17NZ7	7	180	230	0.6	S, US, 12
1/8	3500	31CS	**M1120059.00**	√	CM31D35NZ3	6	90	115	1.5	S, US, 12
1/8	1750	31ES	**M1120027.00**	√	CM31D18NZ10	7	90	115	1.3	S, US, 12
1/8	1750	31ES	**M1120045.00**	√	CM31D17NZ11	7	180	230	0.7	S, US, 12
1/8	1750	34D42CZ	**M1130053.00**	√	CM34D17NC5	8	90	115	1.4	S, US, 12
1/8	1750	34D42CZ	**M1130118.00**	√	CM34D17NC8	7	180	230	0.7	S, US, 12
1/6	3500	31ES	**M1120058.00**	√	CM31D35NZ6	9	90	115	1.9	S, US, 12
1/6	1750	31GS	**M1120042.00**	√	CM31D17NZ8	9	90	115	1.8	S, US, 12
1/6	1750	31GS	**M1120043.00**	√	CM31D17NZ9	11	180	230	0.9	S, US, 12
1/6	1750	34E56C	**M1130054.00**	√	CM34D17NC6	11	90	115	1.7	S, US, 12
1/6	1750	34E56C	**M1130119.00**	C/A	CM34D17NC9	11	180	230	0.9	S, US, 12
1/4	3500	31GS	**M1120062.00**	√	CM31D35NZ5	9	90	115	2.6	S, US, 12
1/4	1750	34G56C	**M1130055.00**	√	CM34D17FC2	13	90	115	2.7	S, US, 13
1/4	1750	34G56C	**M1130120.00**	√	CM34D17FC4	13	180	230	1.3	S, US, 13

25 frame motors have provisions for an optional conduit box catalogue number M1760000.00, see page 238.

C/A - Check Availability.
Note 12: TENV
Note 13: TEFC

♥ Note listing on inside back flap.
Specifications are subject to change without notice.

NEMA is a trademark of National Electrical Manufacturers Association and is not owned or controlled by Regal Beloit Corporation.

LEESON®

Application Notes:

LEESON® Washguard® motors are designed for extended life in applications requiring regular washdown or otherwise wet environments. Washguard motors retard the entrance of water. Extra protection for the motor's interior prevents rust and corrosion build-up and releases trapped moisture to insure a longer life than possible with a standard motor.

General Specifications:

Precision subfractional horsepower DC permanent magnet motors. Designed for use with fullwave non-filtered SCR controls or battery supplied low voltage for adjustable speed applications requiring constant torque throughout the speed range.

Features:

- 303 Stainless steel shaft resists corrosion
- Lubricated spring loaded contact seals prevent moisture from entering the motor
- Double sealed, oversized bearings with high temp lubricant
- Exterior and interior components protected against moisture, acids, alkalies and oil
- Cast conduit box for superior sealing includes:
  - Threaded entrance
  - Drain holes
  - Nitrile gaskets
- 304 stainless steel conduit box cover
- Stainless steel hardware
- USDA approved white epoxy finish
- Nylon seals at bolt heads for superior sealing
- O ring sealed brush covers

90 Volts - TENV - Square Flange or C Face

HP	Full Load RPM	NEMA® Frame	Catalogue Number	Availability	Model Number	App. Wgt. (lbs)	Arm. Volts DC	Control Volts AC Input	F.L. Amps DC	♥Notes
1/8	1750	31S	**M1120181.00**	√	CM31D17V21	11	90	115	1.5	S, US
1/6	1750	31S	**M1120183.00**	√	CM31D17V23	11	90	115	1.9	S, US
1/4	2500	32F42CZ	**M1120185.00**	√	CM32D25VC1	13	90	115	1.9	S, US

♥ Note listing on inside back flap.
Specifications are subject to change without notice.

12 Volts - TENV - Square Flange or C Face

HP	Full Load RPM	NEMA Frame	Catalogue Number	Availability	Model Number	App. Wgt. (lbs)	Arm. Volts DC	F.L. Amps DC	♥Notes
1/8	1750	31S	**M1120182.00**	√	CM31D17VZ2	7	12	11	S, US
1/6	1750	31S	**M1120184.00**	√	CM31D17VZ4	11	12	15	S, US
1/4	2500	32F42CZ	**M1120186.00**	√	CM32D25VC2	13	12	20	S, US

♥ Note listing on inside back flap.
Specifications are subject to change without notice.

NEMA is a trademark of National Electrical Manufacturers Association and is not owned or controlled by Regal Beloit Corporation.

DC Motors

METRIC (IEC) Frame - SCR Rated - IP54

Application Notes:

Please note that one or more of the mounting kits must be used with IEC motors of these frame sizes. See listing on next page for B5 flange and B14 face kits. B3 rigid base kits are listed below.

General Specifications:

- Built to IEC 34-1 electrical and mechanical standards
- IEC 63 and smaller frames supplied with an integral B5 flange or B14 face
- Optional B3 rigid base kit available
- IEC 71 frame and larger can be field modified for B3 rigid base, B5 flange, or B14 face construction using conversion kits
- Tachometer mounting kits available for 71 frame only

Features:

- Cast aluminum conduit box
- Terminal board provided for connections
- All metric fasteners
- Easy brush access for field service
- Oversized brushes for extended life
- High strength rolled steel frame
- Die cast aluminum endshields with steel bearing inserts
- Permanently lubricated sealed ball bearings
- Reversible rotation
- Simple 2 lead connection
- Convenient wiring access
- Tachometer mounting kits available for 71 frame only

180 Volts - Totally Enclosed - B5 Flange

KW/HP	Full Load RPM	IEC Frame	Catalogue Number	Availability	Model Number	App. Wgt. (lbs)	Arm. Volts DC	Control Volts AC Input	F.L. Amps DC	"C" Dim. (Inches)	♥Notes
0.06/1/12	1800	56	**M1130146.00**	C/A	CIM34D18ND1	8	180	230	0.5	6.24	S, US, 12
0.09/1/8	3000	56	**M1130150.00**	√	CIM34D30ND1	9	180	230	0.7	6.74	S, US, 12
0.09/1/8	1800	56	**M1130147.00**	√	CIM34D18ND2	10	180	230	0.7	7.55	S, US, 12
0.12/1/6	3000	56	**M1130151.00**	√	CIM34D30ND2	9	180	230	0.9	7.55	S, US, 12
0.12/1/6	1800	63	**M1130148.00**	√	CIM34D18FD1	7	180	230	0.9	8.30	S, US, 13
0.18/1/4	3000	63	**M1130152.00**	√	CIM34D30ND3	11	180	230	1.3	8.78	S, US, 12
0.18/1/4	1800	63	**M1130149.00**	√	CIM34D18FD2	13	180	230	1.3	9.50	S, US, 13
0.25/1/3	3000	63	**M1130153.00**	√	CIM34D30FD1	11	180	230	1.7	9.50	S, US, 13

These motors have accommodations for B3 base mountings with the kits listed on page 196.

C/A - Check Availability.
Note 12: TENV
Note 13: TEFC

♥ Note listing on inside back flap.
Specifications are subject to change without notice.

DC Motors

METRIC (IEC) Frame - SCR Rated - IP54

180 Volts - Totally Enclosed - B14 Flange

KW/HP	Full Load RPM	IEC Frame	Catalogue Number	Availability	Model Number	App. Wgt. (lbs)	Arm. Volts DC	Control Volts AC Input	F.L. Amps DC	"C" Dim. (Inches)	♥Notes
0.06/1/12	3000	56	**M1110024.00**	√	980.542	6	180	230	0.4	6.34	S, US, 12
0.06/1/12	1800	56	**M1130136.00**	√	CIM34D18NC5	8	180	230	0.5	6.24	S, US, 12
0.09/1/8	3000	56	**M1130140.00**	√	CIM34D30NC1	9	180	230	0.7	6.74	S, US, 12
0.09/1/8	1800	56	**M1130137.00**	√	CIM34D18NC6	14	180	230	0.7	7.55	S, US, 12
0.12/1/6	3000	56	**M1130141.00**	√	CIM34D30NC2	10	180	230	0.9	7.55	S, US, 12
0.12/1/6	1800	63	**M1130138.00**	√	CIM34D18FC1	8	180	230	0.9	8.30	S, US, 13
0.18/1/4	3000	63	**M1130142.00**	√	CIM34D30NC3	10	180	230	1.3	8.78	S, US, 12
0.18/1/4	1800	63	**M1130139.00**	√	CIM34D18FC2	10	180	230	1.3	9.50	S, US, 13
0.25/1/3	3000	63	**M1130143.00**	√	CIM34D30FC1	10	180	230	1.7	9.50	S, US, 13

Except for M1110024.00, these motors have accommodations for B3 base mountings with kits - see page 196.

♥ Note listing on inside back flap.
Specifications are subject to change without notice..

Note 12: TENV
Note 13: TEFC

TEFC - SCR Rated 180 Volts - Round Body

KW/HP	Full Load RPM	IEC Frame	Catalogue Number	Availability	Model Number	App. Wgt. (lbs)	Arm. Volts DC	Control Volts AC Input	F.L. Amps DC	"C" Dim. (Inches)	♥Notes
0.25/1/3	1800	71	**098014.00**	√	CI42D17FT1	23	180	230	1.7	11.28	S, US
0.37/1/2	3000	71	**098016.00**	√	CI42D34FT1	21	180	230	2.5	10.78	S, US
0.37/1/2	1800	71	**098015.00**	√	CI42D17FT2	26	180	230	2.5	11.78	S, US
0.55/3/4	3000	71	**098017.00**	√	CI42D34FT2	24	180	230	3.6	11.78	S, US
0.55/3/4	1800	80	**108369.00**	√	CI4D17FT1	34	180	230	3.5	14.64	S, US
0.75/1	3000	80	**108372.00**	√	CI4D34FT1	45	180	230	4.9	14.64	S, US
0.75/1	1800	80	**108370.00**	√	CI4D17FT2	48	180	230	4.6	17.14	S, US
1.1/1 1/2	3000	80	**108373.00**	√	CI4D34FT2	47	180	230	7.1	16.14	S, US
1.1/1 1/2	1800	80	**108371.00**	√	CI4D17FT3	52	180	230	7.0	17.14	S, US
1.1/1 1/2	1800	90L	**118007.00**	√	CI6D17FT1	64	180	230	7.5	18.97	S, US
1.5/2	3000	90L	**118009.00**	√	CI6D34FT1	72	180	230	10.0	18.47	S, US
1.5/2	1800	90L	**118008.00**	√	CI6D17FT2	84	180	230	9.5	20.47	S, US
2.2/3	3000	90L	**118010.00**	√	CI6D34FT2	82	180	230	16.0	19.47	S, US
2.2/3	1800	112M	**118014.00**	√	CI6D17FK1	90	180	230	14.0	21.79	S, US

IMPORTANT: These round body motors require either a B3 rigid base, B14 face or B5 flange kit - see page 196. Catalogue number 118014.00 comes complete with IEC 112 B14 face and B3 foot; shaft diameter is 24mm.

♥ Note listing on inside back flap.
Specifications are subject to change without notice.

DC Motors

Metric (IEC) Frame - SCR Rated

(For use with Regal's Leeson® DC Metric Motors Only)
All motors are stocked with provisions to accommodate B3 foot mountings with the packages noted below.

B3 Foot Mounting Kits

IEC Frame	Catalogue Number
56	**175142.00**
63	**175143.00**
71	**175144.00**
80	**175145.00**
80	**175784.00†**
90	**175146.00**

† For endshield mounted brush cover motors.

Flange Kits

Flange and face kits for DC metric (IEC) frame motors. An advantage of Regal's modular design concept is the possible use of a different diameter B5 flange or B14 face than is normally assigned to a motor by IEC dimensional standards. This flexibility makes it possible to accommodate a wide variety of gear reducers, pumps and similar close coupled motor mounted loads.

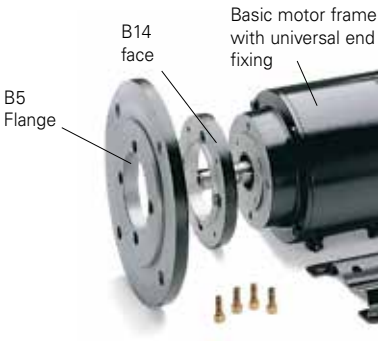

B5 **B14**

B5 Flange Kits (For DC Metric Motors Only)

IEC Frame	Catalogue Number	App. Wgt. (lbs)	AK Register (mm)	BF Hole (mm)	AJ Bolt Circle (mm)	BD Flange Dia. (mm)
71	**175106.00**	2	110	9	130	160
80	**175108.00**	3	130	12	165	200
90S/90L	**175108.00**	3	130	12	165	200
100L/112M	**175137.00**	5	180	15	215	250

Specifications are subject to change without notice.

B14 Face Kits (For DC Metric Motors Only)

IEC Frame	Catalogue Number	App. Wgt. (lbs)	AK Register (mm)	BF Hole (mm)	AJ Bolt Circle (mm)	BD Flange Dia. (mm)
71	**175107.00**	1	70	6	85	105
80	**175109.00**	1	80	6	100	120
90S/90L	**175129.00**	1	95	6	115	140
100L/112M	**175130.00**	2	110	6	130	160

Specifications are subject to change without notice.

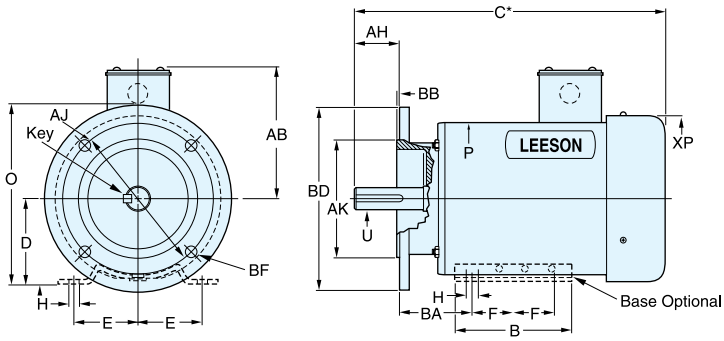

*For overall length, see motor listing.

IEC Frame Dimensions (Millimeters)

IEC Frame	Mounting					Shaft						B14 Face/B5 Flange					General			
	2E	2F	BA	D	H	U	AH✧	KEY	S	R	TAP	AJ	AK	BD	BF	BB	AB	XP	B	O
56	90	71	36	56	6	9	20	15	3	7.0	M3	65 / 100	50 / 80	80 / 120	M5 / 7	2.5 / 2.5	83	96	90	99
63	100	80	40	63	7	11	23	19	4	9.0	M4	75 / 115	60 / 95	90 / 140	M5 / 9	2.5 / 3.0	116	96	96	108
71	112	90	45	71	7	14	30	26	5	11.5	M5	85 / 130	70 / 110	105 / 160	M6 / 9	2.5 / 3.5	114	130	105	132
80	125	100	50	80	10	19	40	33	6	16.0	M6	100 / 165	80 / 130	120 / 200	M6 / 12	3.0 / 3.5	124	149	127	151
90S	140	100	56	90	10	24	50	36	8	20.5	M8	115 / 165	95 / 130	140 / 200	M8 / 12	3.0 / 3.5	135	182	152	173
90L	140	125	56	90	10	24	50	36	8	20.5	M8	115 / 165	95 / 130	140 / 200	M8 / 12	3.0 / 3.5	135	182	152	173
100L	160	140	63	100	12	28	60	41	8	24.5	M10	130 / 215	110 / 180	160 / 250	M8 / 15	3.5 / 4.0	135	182	176	173
112M	190	140	70	112	12	28	60	41	8	24.5	M10	130 / 215	110 / 180	160 / 250	M8 / 15	3.5 / 4.0	162	231	176	225

✧ Without face or flange, AH shaft dimension is 12mm longer.

Specifications are subject to change without notice.

DC Motors

NEMA® Frame - Low Voltage 12, 24, 36 & 48 VOLTS

General Specifications:

- Low voltage PMDC design suitable for battery, solar powered or generator supplied low voltage applications

Features:

- Oversized brushes for long life
- External access to brushes allows for easy replacement further prolonging motor life
- Heavy-duty, stamped steel, bolt on base (removable)
- NEMA® C face mounting flange at no additional cost
- High strength rolled steel frame
- Rugged die cast endshields with steel bearing inserts
- Permanently lubricated sealed ball bearings
- Convert to NEMA 48 frame base dimensions or NEMA 42/48 frame C face dimensions with modification kits shown below
- High starting torques for heavy load applications
- Linear speed torque characteristics throughout the speed range
- Capable of dynamic braking for faster stops
- Reversible rotation
- Simple two lead connection
- For DC controls see page 246

12, 24, 36 & 48 Volts - TENV / TEFC - C Face With Removable Base

HP	Full Load RPM	NEMA® Frame	Catalogue Number	Availability	Model Number	App. Wgt. (lbs)	Arm. Volts DC	F.L. Amps DC	"C" Dim. (Inches)	♥Notes
1/4	1800	S56C	**108045.00**	√	C4D17NK5	21	12	21.0	10.27	S, US, 12, 15
1/3	1800	S56C	**108046.00**	√	C4D17NK6	24	12	27.0	10.77	S, US, 12, 15
1/3	1800	S56C	**108050.00**	√	C4D17NK9	22	24	13.5	10.77	S, US, 12, 15
1/2	1800	S56C	**108047.00**	√	C4D17NK7	29	12	39.0	11.77	S, US, 12, 15
1/2	1800	S56C	**108051.00**	√	C4D17NK10	29	24	20.0	11.77	S, US, 12, 15
1/2	1800	SS56C	**098381.00**	√	C42D18FK6	29	36	13.5	10.81	S, US
1/2	1800	SS56C	**098382.00**	√	C42D18FK7	29	48	11.0	10.81	S, US
3/4	1800	S56C	**108048.00**	√	C4D17FK7	30	12	58.0	13.82	S, US, 35
3/4	1800	S56C	**108052.00**	√	C4D17FK8	30	24	29.0	12.82	S, US
1	1800	S56C	**108322.00**	√	C4D17FK28	39	12	80.0	13.81	S, US, 35
1	1800	S56C	**108053.00**	√	C4D17FK9	37	24	39.0	13.82	S, US, 35
1	1800	S56C	**109101.00**	√	C4D18FK1	37	36	25.5	13.81	S, US
1	1800	S56C	**109102.00**	√	C4D18FK2	37	48	18.5	13.81	S, US
1 1/2	1800	S56CZ	**109103.00**	√	C4D18FK3	39	24	60.0	15.25	S, US, 35, 9
1 1/2	1800	S56CZ	**109104.00**	√	C4D18FK4	37	36	36.0	17.38	S, US, 35, 9
1 1/2	1800	S56CZ	**109105.00**	√	C4D18FK5	37	48	27.0	17.38	S, US, 35, 9
2	1800	S56CZ	**109106.00**	√	C4D18FK6	42	24	70.0	16.74	S, US, 35, 9
2	1800	S56CZ	**109107.00**	√	C4D18FK7	42	36	49.0	16.74	S, US, 35, 9
2	1800	S56CZ	**109108.00**	√	C4D18FK8	42	48	38.0	16.74	S, US, 35, 9

If base is removed, do not reinstall bolts without using washers to compensate for thickness of base.

♥ Note listing on inside back flap.
Specifications are subject to change without notice.

Note 12: TENV
Note 15: Built in conduit box.
Note 35: Terminal studs at 12:00.

NEMA is a trademark of National Electrical Manufacturers Association and is not owned or controlled by Regal Beloit Corporation.

LEESON®

General Specifications:

- Extended life in wet, high humidity applications - IP55
- Design repels water from entering motor
- Internal components protected against rust and corrosion
- Frame, base, end shields, armature and interior components protected by enamel and polyester compounds of outstanding adhesion and resistance to moisture, acids, alkalies and oil

Features:

- 303 stainless steel shaft resists corrosion
- Lubricated spring loaded contact seals prevent moisture from entering the motor
- Patented "V" ring Forsheda®* seal deflects water
- Double sealed, oversized bearings with high temp lubricant
- Exterior and interior components protected against moisture, acids, alkalies and oil
- TENV designs have built in conduit box. Motor 109301.00 has terminal box. Other TEFC models utilize watertight terminal posts
- 304 stainless steel conduit box cover and fan cover
- Re-positionable drain plugs for use in multiple mounting positions
- Nylon seals at bolt heads for superior sealing
- Machined fits throughout
- Stainless steel data plate
- Chemically inert, static free fan on TEFC designs with positive mounting ensures it won't move
- USDA approved white epoxy finish
- For DC controls, see page 246

DC - Low Voltage Rated 12 & 24 Volts - IP55 - C Face With Removable Base

HP	Full Load RPM	NEMA® Frame	Catalogue Number	Availability	Model Number	App. Wgt. (lbs)	Arm. Volts DC	F.L. Amps DC	"C" Dim. (Inches)	♥Notes
1/4	1800	S56C	**109296.00**	√	C4D18VK37	23	12	21.0	10.27	S, US, 12
1/3	1800	S56C	**109297.00**	√	C4D18VK38	26	12	27.0	10.77	S, US, 12
1/2	1800	S56C	**109298.00**	√	C4D18VK39	38	12	39.0	11.77	S, US, 12
1/2	1800	S56C	**109299.00**	√	C4D18VK40	43	24	20.0	11.77	S, US, 12
3/4	1800	S56C	**109300.00**	√	C4D18WK16	53	12	58.0	13.82	S, US, 13
3/4	1800	S56C	**109301.00**	√	C4D18WK17	50	24	29.0	12.82	S, US, 13
1	1800	S56C	**109302.00**	√	C4D18WK18	45	12	80.0	13.81	S, US, 13
1	1800	S56C	**109303.00**	√	C4D18WK19	42	24	39.0	13.82	S, US, 13
1 1/2	1800	S56CZ	**109304.00**	√	C4D18WK20	50	24	60.0	15.25	S, US, 13

Note 12: TENV
Note 13: TEFC

♥ Note listing on inside back flap.
Specifications are subject to change without notice.

*Forsheda is believed to be the trademark or trade name of Trelleborg Forsheda Sweden AB and is not owned or controlled by Regal Beloit Corporation.

NEMA is a trademark of National Electrical Manufacturers Association and is not owned or controlled by Regal Beloit Corporation.

DC Motors

Low Voltage - DC Metric - IP54

General Specifications:

- Built to IEC 34-1 electrical and mechanical standards
- IEC 63 and smaller frames supplied with an integral B5 flange or B14 face
- Optional B3 rigid base kit available
- IEC 71 frame and larger can be field modified for B3 rigid base, B5 flange, or B14 face construction using conversion kits
- Tachometer mounting kits available for 71 frames only

Features:

- Terminal board provided for connections
- All metric fasteners
- Easy brush access for field service
- Oversized brushes for extended life
- High strength rolled steel frame
- Die cast aluminum endshields with steel bearing inserts
- Permanently lubricated sealed ball bearings
- Reversible rotation
- Simple 2 lead connection
- Convenient wiring access
- Tachometer mounting kits available for 71 frames only
- For DC controls, see page 246

24 Volts - TEFC/TENV - Modular Design

KW/HP	Full Load RPM	IEC Frame	Catalogue Number	Availability	Model Number	App. Wgt. (lbs)	DC Voltage	F.L. Amps DC	"C" Dim. (Inches)	♥Notes
0.06/1/12	3000	56	**M1110025.00**	√	980.543	5	24	3.3	5.34	S, US, 12,>
0.06/1/12	1800	56	**M1110026.00**	√	980.544	6	24	3.4	6.34	S, US, 12,>
0.18/1/4	3000	63	**M1130206.00**	√	CIM34D30FD2	13	24	11	7.75	S, US, ♠
0.18/1/4	3000	63	**M1130296.00**	√	CIM34D30FC7	9	24	11	7.75	S, US, >
0.18/1/4	1800	63	**M1130207.00**	√	CIM34D18FD6	13	24	10	8.75	S, US, ♠
0.18/1/4	1800	63	**M1130297.00**	√	CIM34D18FC10	9	24	10	8.75	S, US, >
0.18/1/4	1800	71	**098065.00**	√	CI42D17FT6	19	24	11	10.77	S, US
0.37/1/2	3000	71	**098066.00**	√	CI42D34FT7	23	24	20	11.27	S, US
0.37/1/2	1800	71	**098067.00**	√	CI42D17FT7	23	24	20	12.27	S, US
0.75/1	3000	80	**108456.00**	√	CI4D34FT5	33	24	40	14.14	S, US, 35
0.75/1	1800	80	**108455.00**	√	CI4D17FT6	52	24	39	14.64	S, US, 35
1.1/1 1/2	3000	80	**108457.00**	√	CI4D34FT6	33	24	65	15.64	S, US, 35
1.5/2	3000	80	**108458.00**	√	CI4D34FT7	43	24	78	17.14	S, US, 35

IMPORTANT: IEC 71 and 80 frame motors in this chart are round body and require either B14 face, B5 flange or B3 foot from kits shown on page 196.

Note 12: TENV
Note 35: Terminal bolts at 12:00
Note ♠ - Dedicated B5 Flange
Note > - Dedicated B14 Face

♥ Note listing on inside back flap.
Specifications are subject to change without notice..

General Specifications:

- Low voltage PMDC design suitable for battery, solar powered or generator supplied low voltage applications

Features:

- Compact, space saving design
- Standard conduit box simplifies connections
- Ball bearing construction
- Long life brushes
- External access to brushes allows for easy replacement further prolonging motor life
- High starting torques
- Linear speed torque characteristics throughout the speed range
- Capable of dynamic braking for faster stops
- Reversible rotation
- Simple two lead connection
- Class F insulated with high temperature welded commutators
- For DC controls, see page 246

12 & 24 Volts - TENV - Square Flange

HP	Full Load RPM	Frame	Catalogue Number	Availability	Model Number	App. Wgt. (lbs)	Arm. Volts DC	F.L. Amps DC	♥Notes
1/20	1750	25CS	**M1110006.00**	√	980.536	3	12	4.4	S, US, *
1/10	4200	25CS	**M1110006.00**	√	980.536	3	24	4.4	S, US, *
1/14	1750	31AS	**M1120040.00**	√	CM31D17NZ6	4	12	7.7	S, US
1/7	4200	31AS	**M1120040.00**	√	CM31D17NZ6	4	24	7.7	S, US
1/7	1750	31ES	**M1120044.00**	√	CM31D17NZ10	9	12	13.0	S, US
1/4	3500	31ES	**M1120044.00**	√	CM31D17NZ10	9	24	13.0	S, US
1/6	1750	31GS	**M1120046.00**	√	CM31D17NZ26	8	12	14.0	S, US
1/3	3900	31GS	**M1120046.00**	√	CM31D17NZ26	8	24	14.0	S, US

These motors may be operated at 12, 24V, or at intermediate voltages between 12 and 24V, within horsepower ranges noted.

*Note: Provision for optional conduit box - M1760000.00

♥ Note listing on inside back flap.
Specifications are subject to change without notice.

DC Motors

Low Voltage Commercial Duty Metric (IEC) Frame Motors

Features:

- Specially designed low voltage DC for use in OEM applications
- Combination of features and low cost make these ideal for many uses
- IP44 (TENV) enclosure
- Dedicated B14 face mount
- Continuous duty

12, 24V & 90 Volts - TENV - B14 Mount

HP	Full Load RPM	IEC Frame	Catalogue Number	Availability	Model Number	App. Wgt. (lbs)	Arm. Volts DC	F.L. Amps DC	♥Notes
1/15	3000	56	**980.159**	√	980.159	2.3	12	6.4	S, US
1/15	3000	56	**980.143**	√	980.143	2.3	24	3.2	S, US
1/15	3000	56	**980.549**	√	980.549	2.3	90	0.8	S, US
1/8	3000	56	**970.600**	√	970.600	3.0	12	12.0	S, US
1/8	3000	56	**970.601**	√	970.601	3.0	24	5.3	S, US
1/8	3000	56	**970.576**	√	970.576	3.0	90	1.2	S, US
1/6	3000	56	**970.620**	√	970.620	3.5	12	13.1	S, US
1/6	3000	56	**970.621**	√	970.621	3.5	24	6.8	S, US
1/6	3000	56	**970.577**	√	970.577	3.5	90	1.6	S, US

♥ Note listing on inside back flap.
Specifications are subject to change without notice.

DC Motors - Washguard® Motors

NEMA® and IEC Washguard® IP55
All-Stainless DC Motors - SCR Rated

TEFC/TENV - SCR Rated 90 & 180 Volts - NEMA - C Face With Base

HP	Full Load RPM	NEMA® Frame	Catalogue Number	Availability	Model Number	App. Wgt. (lbs)	Arm. Volts DC	Control Volts AC Input	F.L. Amps DC	"C" Dim. (Inches)	♥Notes
1/4	1750	S56C	**109065.00**	√	C4D17VK24	38	90	115	3.1	11.81	S, US, 12
1/3	1750	S56C	**109066.00**	√	C4D17VK25	44	90	115	3.8	12.81	S, US, 12
1/3	1750	S56C	**109067.00**	√	C4D17VK26	44	180	230	1.9	12.81	S, US, 12
1/2	1750	S56C	**109069.00**	√	C4D17WK9	46	90	115	5.2	13.87	S, US, 13
1/2	1750	S56C	**109070.00**	√	C4D17WK10	46	180	230	2.7	13.87	S, US, 13
3/4	1750	S56C	**109072.00**	√	C4D17WK13	47	90	115	7.5	15.37	S, US, 13
3/4	1750	S56C	**109073.00**	√	C4D17WK14	48	180	230	3.7	15.37	S, US, 13
1	1750	S56C	**109075.00**	√	C4D17WK16	51	90	115	9.5	16.37	S, US, 13
1	1750	S56C	**109076.00**	√	C4D17WK17	50	180	230	5.0	16.37	S, US, 13

Base is welded to frame and not removable.
Note 12: TENV
Note 13: TEFC

♥ Note listing on inside back flap.
Specifications are subject to change without notice.

TEFC/TENV - SCR Rated 90 & 180 Volts - NEMA - C Face Less Base

HP	Full Load RPM	NEMA Frame	Catalogue Number	Availability	Model Number	App. Wgt. (lbs)	Arm. Volts DC	Control Volts AC Input	F.L. Amps DC	"C" Dim. (Inches)	♥Notes
1/4	1750	S56C	**109078.00**	√	C4D17VC5	38	90	115	3.1	11.81	S, US, 12
1/3	1750	S56C	**109079.00**	√	C4D17VC6	44	90	115	3.8	12.81	S, US, 12
1/3	1750	S56C	**109080.00**	√	C4D17VC7	44	180	230	1.9	12.81	S, US, 12
1/2	1750	S56C	**109082.00**	√	C4D17WC2	46	90	115	5.2	13.87	S, US, 13
1/2	1750	S56C	**109083.00**	√	C4D17WC3	46	180	230	2.7	13.87	S, US, 13
3/4	1750	S56C	**109085.00**	√	C4D17WC5	47	90	115	7.5	15.37	S, US, 13
3/4	1750	S56C	**109086.00**	C/A	C4D17WC6	48	180	230	3.7	15.37	S, US, 13
1	1750	S56C	**109088.00**	√	C4D17WC8	51	90	115	9.5	16.37	S, US, 13
1	1750	S56C	**109089.00**	√	C4D17WC9	50	180	230	5.0	16.37	S, US, 13

C/A - Check Availability.
Note 12: TENV
Note 13: TEFC

♥ Note listing on inside back flap.
Specifications are subject to change without notice.

NEMA is a trademark of National Electrical Manufacturers Association and is not owned or controlled by Regal Beloit Corporation.

DC Motors - Washguard® Motors

Metric (IEC) Frame PMDC Motors IP55

TEFC/TENV - SCR Rated 180 Volts - All Stainless Steel - C Face With Base

HP/KW	Full Load RPM	IEC Frame	Catalogue Number	Availability	Model Number	App. Wgt. (lbs)	Arm. Volts DC	Control Volts AC Input	F.L. Amps DC	"C" Dim. (Inches)	♥Notes
1/3 - 0.25	1750	80D	**109068.00**	√	CI4D17VK27	44	180	230	1.9	12.81	S, US, 12
1/2 - 0.37	1750	80D	**109071.00**	√	CI4D17WK11	46	180	230	2.7	13.87	S, US, 13
3/4 - 0.55	1750	80D	**109074.00**	√	CI4D17WK15	48	180	230	3.7	15.37	S, US, 13
1 - 0.75	1750	80D	**109077.00**	√	CI4D17WK18	50	180	230	5.0	16.37	S, US, 13

Base is welded to frame and not removable.
Note 12: TENV
Note 13: TEFC

♥ Note listing on inside back flap.
Specifications are subject to change without notice.

TEFC/TENV - SCR Rated 180 Volts - Metric (IEC) - All-Stainless Steel - C Face Less Base

HP/KW	Full Load RPM	IEC Frame	Catalogue Number	Availability	Model Number	App. Wgt. (lbs)	Arm. Volts DC	Control Volts AC Input	F.L. Amps DC	"C" Dim. (Inches)	♥Notes
1/3 - 0.25	1750	80D	**109081.00**	√	CI4D17VC8	44	180	230	1.9	12.81	S, US, 12
1/2 - 0.37	1750	80D	**109084.00**	√	CI4D17WC4	46	180	230	2.7	13.87	S, US, 13
3/4 - 0.55	1750	80D	**109087.00**	√	CI4D17WC7	48	180	230	3.7	15.37	S, US, 13
1 - 0.75	1750	80D	**109090.00**	√	CI4D17WC10	50	180	230	5.0	16.37	S, US, 13

Note 12: TENV
Note 13: TEFC

♥ Note listing on inside back flap.
Specifications are subject to change without notice.

Flange And Face Kits for DC Metric (IEC) Frame Motors

Regal's Leeson® modular motor design concept of other metric DC motors has been applied to the all-stainless metric motors. Any flange or face kit can mount on any motor. This allows the greatest flexibility from the smallest inventory of motors.

B5 Flange Kits (For Stainless DC Metric Motors)

IEC Frame	Catalogue Number	Availability	App. Wgt. (lbs)	BD Flange Dia. (mm)	AK Register (mm)	BF Hole (mm)	AJ Bolt Circle (mm)
71	**175593.00**	√	2	110	9	130	160
80	**175594.00**	√	3	130	12	165	200
90S/90L	**175594.00**	√	3	130	12	165	200
100L/112M	**175595.00**	√	5	180	15	215	250

B14 Flange Kits (For Stainless DC Metric Motors)

IEC Frame	Catalogue Number	Availability	App. Wgt. (lbs)	BD Flange Dia. (mm)	AK Register (mm)	BF Hole (mm)	AJ Bolt Circle (mm)
71	**175596.00**	√	1	70	6	85	105
80	**175597.00**	√	1	80	6	100	120
90S/90L	**175598.00**	√	1	95	6	115	140
100L/112M	**175599.00**	√	2	110	6	130	160

⚠ WARNING

Failure to adhere to the instructions listed immediately below could result in death or serious injury.

1. Disconnect power to the motor before performing service or maintenance.
2. Discharge all capacitors before servicing motor.
3. Keep hands and clothing away from moving parts.
4. Check that required safety guards are in place before starting equipment.

Problem	Likely Causes	What To Do
Motor fails to start upon initial installation.	Motor is miswired.	Verify that the motor is wired correctly.
	No output power from controller.	Measure voltage coming from the controller.
	Motor damaged and the fan guard is contacting the cooling fan.	Replace fan guard.
	Motor damaged and the armature is rubbing against the magnets.	Disassemble motor and see if the armature can be realigned by reassembly. Motor may have to be replaced.
Motor runs in the wrong direction.	Incorrect wiring.	Interchange the two motor leads.
Motor runs ok but has a clicking noise.	Suspect a burr on the commutator.	Stone the armature commutator with a commutator stone to remove burr.
Motor has been running, then fails to start.	Fuse or circuit breaker is tripped	Replace the fuse or reset the breaker
	Armature is shorted or went to ground. Motor may make a humming noise and the circuit breaker or fuse will trip.	Disassemble motor and inspect the armature for a burnt coil. Inspect the commutator for burnt bars. If this condition exists, the motor needs to be replaced. To test, set your OHM to the RX1 scale, touch probes to bars 180 degrees apart all around the commutator. The reading should be equal.
	The brushes may be worn down too far and no longer make contact with the commutator.	Inspect the brushes to make sure that they are still making contact with the commutator. Refer to manufacturer's recommended brush length chart.
Motor runs but loses power.	Load has increased.	Verify the load has not changed. Measure the amp draw of motor against the full load amp rating of the motor. If the amp draw is higher than rating, motor is undersized for application.
	Motor controller not properly set.	Check controller manual for adjustments. The torque and/or IR compensation settings may need adjustment.
	Motor may have an open connection.	Inspect the armature for an open connection.
	Brushes may not be seated properly or worn beyond their useful length.	Verify that the brushes are properly seated and measure their length against the recommended brush length chart.
Motor takes too long to accelerate.	Motor controller not properly set.	The accel trim pot of the controller should be adjusted.
	Brushes are worn.	Verify brush length.
	Bearings may be defective.	Inspect bearings for proper service. Noisy or rough bearings should be replaced.

Gearmotors

Quick Reference – Stock Sub-FHP Gearmotors

		AC Single & Three Phase		DC SCR & Low Voltage
	Parallel Shaft PZ Series Gearmotors	Single Phase 115V 12-100 In-Lbs Output Torque **Page 228**	BODINE®/BISON®/DAYTON®* DIRECT INTERCHANGE	DC SCR 90 & 180V 10-100 In-Lbs Output Torque Low Voltage (12V) 36-100 In-Lbs torque **Page 208**
	P240 & P300 Series Gearmotors	Single Phase 115/230V 43-391 In-Lbs Output Torque **Page 230**	BISON/DAYTON DIRECT INTERCHANGE	DC SCR 90 & 180V 27-353 In-Lbs Output Torque Low Voltage (12V) 113-353 In-Lbs torque **Page 210**
	OS300 Series Gearmotors			DC SCR 90V and Low Voltage (12V) Output Torque 130-268 In-Lbs **Page 212**
	PE350 Series Gearmotors	Single Phase 115/230V 25-341 In-Lbs Output Torque Three Phase 230/460V 55-320 In-Lbs Output Torque **Page 232**	BODINE DIRECT INTERCHANGE	DC SCR 90 & 180V 25-371 In-Lbs Output Torque Low Voltage (12V) 155-341 In-Lbs torque **Page 214**
	P1100 Series Gearmotors	Single Phase 115/230V 70-1105 In-Lbs Output Torque Three Phase 230/460V 70-1105 In-Lbs Output Torque **Page 234**	BISON/DAYTON DIRECT INTERCHANGE	DC SCR 90V 105-1112 In-Lbs Output Torque Low Voltage (12V) 320-1087 In-Lbs torque **Page 216**
	Right-Angle Worm Type 10 & 13 Series Gearmotors	Single Phase 115/230V 14-113 In-Lbs Output Torque **Page 236**	BODINE/DAYTON DIRECT INTERCHANGE	DC SCR 90 & 180V 5-135 In-Lbs Output Torque Low Voltage (12V) 25-135 In-Lbs torque **Page 218**
	Bravo® Right Angle Worm Type 12 Series Gearmotors			DC SCR 90V and Low Voltage (12V) Output Torque 46-134 In-Lbs **Page 220**

*Bison is believed to be the trademark or trade name of Bison Gear & Engineering Corporation and is not owned or controlled by Regal Beloit Corporation.

*Bodine is believed to be the trademark or trade name of Bodine Electric Corporation and is not owned or controlled by Regal Beloit Corporation.

*Dayton is a trademark or trade name of Dayton Electric Manufacturing Company and is not owned or controlled by Regal Beloit Corporation.

Quick Reference – Stock Sub-FHP Washguard® Gearmotors

P300 Series Gearmotors

DC SCR 90V and Low Voltage (12V) Output Torque 44-353 In-Lbs
Page 222

PE350 Series Gearmotors

DC SCR 90V and Low Voltage (12V) Output Torque 25-341 In-Lbs
Page 224

Right-Angle 13 Series Gearmotors

DC SCR 90V and Low Voltage (12V) Output Torque 50-135 In-Lbs
Page 226

P240 Series Gearmotors

AC – Single Phase & Three Phase Washdown Duty 60-391 In-Lbs Output Torque
Page 231

BISON®/DAYTON® DIRECT INTERCHANGE *

Right-Angle Worm Type 10 & 13 Series Gearmotors

AC – Single Phase & Three Phase Washdown Duty 23-220 In-Lbs Output Torque
Page 237

BODINE®/DAYTON® DIRECT INTERCHANGE *

Stock Sub-FHP Three Phase Inverter Rated Gearmotors

Includes gearmotor series PZ, P240, PE350 and 13 series right-angle

Three Phase 230V 12-391 In-Lbs Output Torque
Page 240

*Bison is believed to be the trademark or trade name of Bison Gear & Engineering Corporation and is not owned or controlled by Regal Beloit Corporation.

*Bodine is believed to be the trademark or trade name of Bodine Electric Corporation and is not owned or controlled by Regal Beloit Corporation.

*Dayton is a trademark or trade name of Dayton Electric Manufacturing Company and is not owned or controlled by Regal Beloit Corporation.

Gearmotors

Parallel Shaft - PZ Series - DC

SCR Rated - 10-100 In-Lbs Torque
Low Voltage - 36-100 In-Lbs Torque

General Specifications - SCR Rated Gearmotors:

- Performance matched for continuous duty service over 60:1 speed range.
- Constant torque throughout the speed range when powered by a full-wave unfiltered SCR-type adjustable. speed control having a typical form factor of 1.3 to 1.4.

General Specifications - Low Voltage Gearmotors:

- Performance matched for continuous duty service.
- Designed for battery power or can be used with a low voltage controller with form factor up to 1.05.

Features:

- Precision machined in-line steel gears.
- First stage steel helical gear followed by spur-type gears.
- Lubrication is permanent semi-fluid grease, reducing possibility of leakage.
- Output shafts have needle bearings for high load capacities.
- Shafts are hardened steel.
- Optional conduit box and PZ gearmotor mounting bracket available, see page 238.

Application Notes:

- These gearmotors are designed for mounting at any angle, but motor below the reducer should be avoided to prevent leakage of lubricant into the motor should the motor shaft seal fail.
- Motor's stall torque could exceed recommended full load torques. A current limiting device such as an SCR control should be used to prevent damage. This issue is even more critical for low voltage motors. Typically no controller is used since motor is connected directly to a battery; so some type of current limit or fusing should be considered.
- Overhung load capacities shown are at center of output shaft.
- Model PZ gearmotors have the same mounting dimensions as Bodine®* model D and Z, Baldor®*/Bison®* 100 gearmotors, and a number of Dayton®* gearmotors.
- For additional information, see Bulletin 1830.
- **Bodine®*/Baldor®*/Bison®*/Dayton®* direct interchange.**

*Baldor is believed to be the trademark or trade name of ABB ASEA Brown Boveri Ltd. and is not owned or controlled by Regal Beloit Corporation.

*Bison is believed to be the trademark or trade name of Bison Gear & Engineering Corporation and is not owned or controlled by Regal Beloit Corporation.

*Bodine is believed to be the trademark or trade name of Bodine Electric Corporation and is not owned or controlled by Regal Beloit Corporation.

*Dayton is a trademark or trade name of Dayton Electric Manufacturing and is not owned or controlled by Regal Beloit Corporation.

Gearmotors

Parallel Shaft - PZ Series - DC

SCR Rated - 10-100 In-Lbs Torque
Low Voltage - 36-100 In-Lbs Torque

90 & 180 Volts - TENV - PZ Series

Output RPM	F.L. Torque (Lb In.)	Input HP	Catalogue Number	Availability	Model Number	Gearmotor Type & Frame	Ratio to 1	Arm. Volts DC	F.L. Amps DC	Over-hung Load (lb.)	Dimensions (inches) P	X	XL	XH	♥Notes
4	40	1/40	**M1115002.00**	√	985.620	PZ5-30A	450	90	0.2	155	3.00	3.25	9.28	7.72	S, US
4	40	1/40	**M1125046.00**	√	CM31D18NZ41	PZ5-30A	450	180	0.2	155	3.00	3.25	9.30	7.74	S, US
10	100	1/20	**M1115001.00**	√	985.621	PZ4-30E	180	90	0.5	155	3.00	3.25	9.28	7.72	S, US
10	100	1/20	**M1125047.00**	C/A	985.624	PZ4-30A	180	180	0.3	155	3.00	3.25	9.30	7.74	S, US
20	100	1/20	**M1115000.00**	√	985.622	PZ4-30E	90	90	0.5	155	3.00	3.25	9.28	7.72	S, US
20	100	1/20	**M1125048.00**	C/A	985.625	PZ4-30A	90	180	0.3	155	3.00	3.25	9.30	7.74	S, US
30	100	1/17	**M1125002.00**	√	985.627	PZ3-30B	60	90	0.8	155	3.00	2.68	8.74	7.18	S, US
30	100	1/17	**M1125037.00**	√	985.635	PZ3-30B	60	180	0.4	155	3.00	2.68	8.74	7.18	S, US
60	56	1/17	**M1125003.00**	√	985.628	PZ3-30B	30	90	0.8	171	3.00	2.68	8.74	7.18	S, US
60	56	1/17	**M1125036.00**	√	985.634	PZ3-30B	30	180	0.4	171	3.00	2.68	8.74	7.18	S, US
100	36	1/17	**M1125004.00**	√	985.626	PZ3-30B	18	90	0.8	171	3.00	2.68	8.74	7.18	S, US
100	36	1/17	**M1125035.00**	√	985.631	PZ3-30B	18	180	0.4	171	3.00	2.68	8.74	7.18	S, US
150	24	1/17	**M1125005.00**	√	985.629	PZ2-30B	12	90	0.8	180	3.00	2.40	8.46	6.9	S, US
150	24	1/17	**M1125034.00**	√	985.633	PZ2-30B	12	180	0.4	180	3.00	2.40	8.46	6.9	S, US
300	10	1/17	**M1125006.00**	√	985.630	PZ2-30B	6	90	0.8	180	3.00	2.40	8.46	6.9	S, US
300	10	1/17	**M1125033.00**	√	985.632	PZ2-30B	6	180	0.4	180	3.00	2.40	8.46	6.9	S, US

C/A - Check Availability.

♥ Note listing on inside back flap.
Specifications are subject to change without notice.

12 Volts - TENV - PZ Series

Output RPM	F.L. Torque (Lb In.)	Input HP	Catalogue Number	Availability	Model Number	Gearmotor Type & Frame	Ratio to 1	Arm. Volts DC	F.L. Amps DC	Over-hung Load (lb.)	Dimensions (inches) P	X	XL	XH	♥Notes
10	100	1/20	**M1125213.00**	√	985.653	PZ4-30	180	12	2.7	155	3.00	3.25	9.28	7.72	S, US
30	100	1/17	**M1125214.00**	√	985.654	PZ3-30	60	12	5.2	155	3.00	2.68	8.74	7.18	S, US
55	56	1/17	**M1125215.00**	C/A	985.655	PZ3-30	30	12	5.6	171	3.00	2.68	8.74	7.18	S, US

C/A - Check Availability.

PZ SERIES - DC

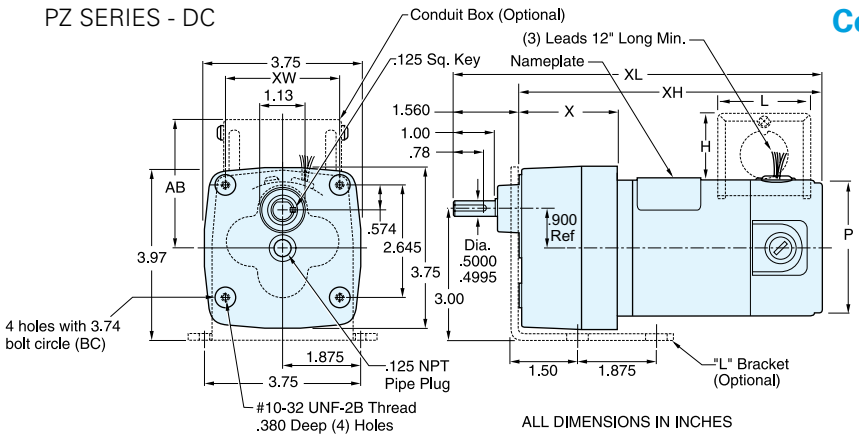

Conduit Box Dimensions (IN)

Frame	XW	AB	H	L
30/31	2.63	3.47	1.90	3.13

Gearmotors

Parallel Shaft - P300 Series - DC

SCR Rated - 27-353 In-Lbs. Torque
Low Voltage - 113-353 In-Lbs Torque

General Specifications - SCR Rated Gearmotors:

- Performance matched for continuous duty service over 60:1 speed range.
- Constant torque throughout the speed range when powered by a full-wave unfiltered SCR-type adjustable speed control having a typical form factor of 1.3 to 1.4.

General Specifications - Low Voltage Gearmotors:

- Performance matched for continuous duty service.
- Designed for battery power or can be used with a low voltage controller with form factor up to 1.05.

Features:

- Precision machined in-line steel gears.
- First stage steel helical gear followed by spur-type gears.
- Lubrication is permanent semi-fluid grease, reducing possibility of leakage.
- Output shafts have needle bearings for high load capacities.
- Shafts are hardened steel.
- Optional conduit box available, see page 238.

Application Notes:

- These gearmotors are designed for mounting at any angle, but motor below the reducer should be avoided to prevent leakage of lubricant into the motor should the motor shaft seal fail.
- Motor's stall torque could exceed recommended full load torques. A current limiting device such as an SCR control should be used to prevent damage. This issue is even more critical for low voltage motors. Typically no controller is used since motor is connected directly to a battery; so some type of current limit or fusing should be considered.
- Overhung load capacities shown are at center of output shaft.
- For additional information, see Bulletin 1830.
- **Bison®*/Dayton®* direct interchange.**

*Bison is believed to be the trademark or trade name of Bison Gear & Engineering Corporation and is not owned or controlled by Regal Beloit Corporation.

*Dayton is a trademark or trade name of Dayton Electric Manufacturing Company and is not owned or controlled by Regal Beloit Corporation.

Gearmotors

Parallel Shaft - P300 Series - DC

SCR Rated - 27-353 In-Lbs. Torque
Low Voltage - 113-353 In-Lbs Torque

90 & 180 Volts - TENV - P300 Series

Output RPM	F.L. Torque (Lb In.)	Input HP	Catalogue Number	Availability	Model Number	Gearmotor Type & Frame	Ratio to 1	Arm. Volts DC	F.L. Amps DC	Over-hung Load (lb.)	Dimensions (inches) P	X	XL	XH	♥Notes
5	353	1/20	**M1115024.00**	√	985.602	P303-30E	336	90	0.5	565	3.00	3.54	10.07	8.57	S, US
9	268	1/20	**M1115025.00**	√	985.603	P303-30E	216	90	0.5	474	3.00	3.54	10.07	8.57	S, US
18	150	1/20	**M1115026.00**	√	985.604	P303-30E	103	90	0.5	385	3.00	3.54	10.07	8.57	S, US
20	140	1/20	**M1125092.00**	√	985.607	P303-31E	91	180	0.3	374	3.11	3.54	10.07	8.57	S, US
34	82	1/20	**M1115027.00**	√	985.605	P303-30E	52	90	0.5	318	3.00	3.54	10.07	8.57	S, US
51	55	1/20	**M1115028.00**	√	985.606	P302-30E	35	90	0.5	281	3.00	3.54	10.07	8.57	S, US
60	45	1/20	**M1125093.00**	√	985.609	P302-31E	29	180	0.3	267	3.11	3.54	10.07	8.57	S, US
109	27	1/20	**M1115029.00**	√	985.601	P302-30E	16	90	0.5	224	3.00	3.54	10.07	8.57	S, US
106	26	1/20	**M1125094.00**	C/A	985.608	P302-31E	17	180	0.3	222	3.11	3.54	10.07	8.57	S, US
24	280	1/8	**M1125069.00**	√	985.611	P303-30E	76	90	1.3	353	3.00	3.54	11.54	10.04	S, US
31	220	1/8	**M1125070.00**	√	985.612	P303-30E	58	90	1.4	327	3.00	3.54	11.54	10.04	S, US
31	220	1/8	**M1125038.00**	√	985.617	P303-30E	58	180	0.7	327	3.00	3.54	11.54	10.04	S, US
51	130	1/8	**M1125071.00**	√	985.615	P302-30E	35	90	1.4	277	3.00	3.54	11.54	10.04	S, US
51	130	1/8	**M1125039.00**	√	985.614	P302-30E	35	180	0.7	277	3.00	3.54	11.54	10.04	S, US
61	113	1/8	**M1125072.00**	√	985.610	P302-30E	29	90	1.3	267	3.00	3.54	11.54	10.04	S, US
94	77	1/8	**M1125073.00**	√	985.613	P302-30E	19	90	1.3	236	3.00	3.54	11.54	10.04	S, US
94	77	1/8	**M1125040.00**	√	985.618	P302-30E	19	180	0.7	236	3.00	3.54	11.54	10.04	S, US
167	43	1/8	**M1125074.00**	√	985.616	P302-30E	11	90	1.3	197	3.00	3.54	11.54	10.04	S, US
170	43	1/8	**M1125041.00**	√	985.619	P302-30E	11	180	0.7	196	3.00	3.54	11.54	10.04	S, US

C/A - Check Availability.

♥ Note listing on inside back flap.
Specifications are subject to change without notice.

12 Volts - TENV - P300 Series

Output RPM	F.L. Torque (Lb In.)	Input HP	Catalogue Number	Availability	Model Number	Gearmotor Type & Frame	Ratio to 1	Arm. Volts DC	F.L. Amps DC	Over-hung Load (lb.)	Dimensions (inches) P	X	XL	XH	♥Notes
5	353	1/20	**M1125217.00**	√	985.657	P303-30	336	12	5.6	565	3.00	3.85	10.07	8.57	S, US
31	220	1/8	**M1125218.00**	√	985.658	P303-30	58	12	10.6	327	3.00	3.54	11.54	10.04	S, US
51	130	1/8	**M1125219.00**	√	985.659	P302-30	35	12	10.3	277	3.00	3.23	11.54	10.04	S, US
61	113	1/8	**M1125220.00**	√	985.660	P302-30	29	12	10.4	267	3.00	3.23	11.54	10.04	S, US

♥ Note listing on inside back flap.
Specifications are subject to change without notice.

P300 SERIES

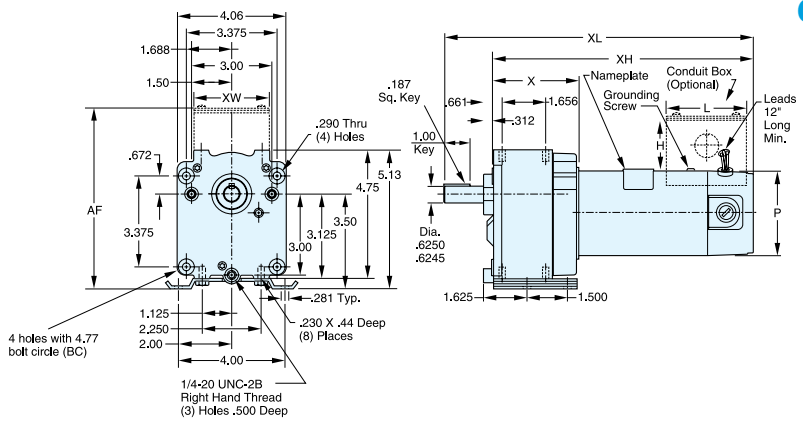

Conduit Box Dimensions (IN)

Frame	XW	AB	H	L
30/31	2.63	3.47	1.90	3.13

Gearmotors

Off-Set Shaft Gearmotors - OS300 Series - DC

SCR Rated - 130-268 In-Lbs. Torque
Low Voltage - 130-268 In-Lbs. Torque

General Specifications - SCR Rated Gearmotors:

- Performance matched for continuous duty service over 60:1 speed range.
- Constant torque throughout the speed range when powered by a full-wave unfiltered SCR-type adjustable speed control having a typical form factor of 1.3 to 1.4.

General Specifications - Low Voltage Gearmotors:

- Performance matched for continuous duty service.
- Designed for battery power or can be used with a low voltage controller with form factor up to 1.05.

Features:

- Precision machined in-line steel gears.
- First stage steel helical gear followed by spur-type gears.
- Lubrication is permanent semi-fluid grease, reducing possibility of leakage.
- Output shafts have needle bearings for high load capacities.
- Shafts are hardened steel.
- Optional conduit box available, see page 238.

Application Notes:

- These gearmotors are designed for mounting at any angle, but motor below the reducer should be avoided to prevent leakage of lubricant into the motor should the motor shaft seal fail.
- Motor's stall torque could exceed recommended full load torques. A current limiting device such as an SCR control should be used to prevent damage. This issue is even more critical for low voltage motors. Typically no controller is used since motor is connected directly to a battery; so some type of current limit or fusing should be considered.
- Overhung load capacities shown are at center of output shaft.

SCR Rated - 130-268 In-Lbs. Torque
Low Voltage - 130-268 In-Lbs. Torque

90 Volts - TENV - OS300 Series

Output RPM	F.L. Torque (Lb In.)	Input HP	Catalogue Number	Availability	Model Number	Gearmotor Type & Frame	Ratio to 1	Arm. Volts DC	F.L. Amps DC	Over-hung Load (lb.)	Dimensions (inches) P	X	XL	XH	♥Notes
9	268	1/20	**M1125251.00**	C/A	985.692	OS303-30	210	90	0.5	474	3.00	2.81	4.5	8.52	S, US
19	150	1/20	**M1125250.00**	√	985.691	OS303-30	103	90	0.8	385	3.00	2.81	4.5	8.52	S, US
24	280	1/8	**M1125249.00**	C/A	985.690	OS303-30	76	90	1.3	353	3.00	2.81	6.42	10.45	S, US
31	220	1/8	**M1125248.00**	√	985.689	OS303-30	58	90	1.4	327	3.00	2.81	6.42	10.45	S, US
51	130	1/8	**M1125247.00**	√	985.688	OS303-30	35	90	1.4	277	3.00	2.81	6.42	10.45	S, US

C/A - Check Availability.

♥ Note listing on inside back flap.
Specifications are subject to change without notice.

12 Volts - TENV - OS300 Series

Output RPM	F.L. Torque (Lb In.)	Input HP	Catalogue Number	Availability	Model Number	Gearmotor Type & Frame	Ratio to 1	Arm. Volts DC	F.L. Amps DC	Over-hung Load (lb.)	Dimensions (inches) P	X	XL	XH	♥Notes
9	268	1/20	**M1125256.00**	C/A	985.697	OS303-30	210	12	4.5	474	3.00	2.81	4.5	8.52	S, US
18	150	1/20	**M1125255.00**	C/A	985.696	OS303-30	103	12	5.0	385	3.00	2.08	4.5	8.52	S, US
24	280	1/8	**M1125254.00**	C/A	985.695	OS303-30	76	12	10.6	353	3.00	2.81	6.42	10.45	S, US
31	220	1/8	**M1125253.00**	√	985.694	OS303-30	58	12	10.6	327	3.00	2.81	6.42	10.45	S, US
51	130	1/8	**M1125252.00**	√	985.693	OS303-30	35	12	10.3	277	3.00	2.81	6.42	10.45	S, US

C/A - Check Availability.

♥ Note listing on inside back flap.
Specifications are subject to change without notice.

OS300 SERIES

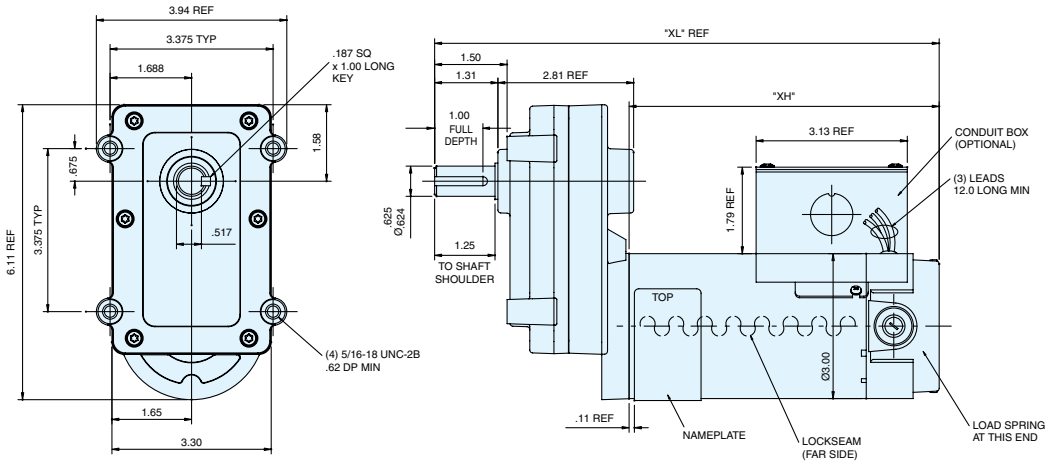

ALL DIMENSIONS IN INCHES

Gearmotors

PE350 Series - Parallel Shaft - DC

SCR Rated - 25-371 In-Lbs. Torque
Low Voltage - 155-341 In-Lbs Torque

General Specifications - SCR Rated Gearmotors:

- Performance matched for continuous duty service over 60:1 speed range.
- Constant torque throughout the speed range when powered by a full-wave unfiltered SCR-type adjustable speed control having a typical form factor of 1.3 to 1.4.

General Specifications - Low Voltage Gearmotors:

- Performance matched for continuous duty service.
- Designed for battery power or can be used with a low voltage controller with form factor up to 1.05.

Features:

- Rugged die cast aluminum gear housing for maximum gear and bearing support.
- Precision machined gearing, hardened for maximum load capability.
- All gearing designed and rated to AGMA class 9 standards, and to withstand momentary shock overload of 200%.
- Oversized output bearings for greater overhung load capacity and long life.
- High carbon alloy output shaft provides maximum strength and rigidity.
- All needle bearing journals are precision ground after heat treating to provide maximum fit and finish.
- Heavy duty industrial oil seals keep lubricant in and dirt out.
- Gears and bearings are splash lubricated with permanent, heavy duty gear oil.
- Optional conduit box available, see page 238.

Application Notes:

- These gearmotors are designed for mounting at any angle, but motor below the reducer should be avoided to prevent leakage of lubricant into the motor should the motor shaft seal fail.
- Motor's stall torque could exceed recommended full load torques. A current limiting device such as an SCR control should be used to prevent damage. This issue is even more critical for low voltage motors. Typically no controller is used since motor is connected directly to a battery; so some type of current limit or fusing should be considered.
- Overhung load capacities shown are at center of output shaft.
- **Bodine®*/Baldor®* direct interchange.**

*Baldor is believed to be the trademark or trade name of ABB ASEA Brown Boveri Ltd. and is not owned or controlled by Regal Beloit Corporation.

*Bodine is believed to be the trademark or trade name of Bodine Electric Corporation and is not owned or controlled by Regal Beloit Corporation.

Gearmotors

PE350 Series - Parallel Shaft - DC

SCR Rated - 25-371 In-Lbs. Torque
Low Voltage - 155-341 In-Lbs Torque

90 & 180 Volts - TENV - PE350 Series

Output RPM	F.L. Torque (Lb In.)	Input HP	Catalogue Number	Availability	Model Number	Gearmotor Type & Frame	Ratio to 1	Arm. Volts DC	F.L. Amps DC	Over-hung Load (lb.)	Dimensions (inches) XL	Dimensions (inches) XH	♥Notes
7	330	1/8	**M1135106.00**	√	CM34D25NZ62	P353-34	336	90	0.7	565	11.31	9.31	S, US
7	330	1/8	**M1135139.00**	C/A	CM34D25NZ71	P353-34	336	180	0.4	565	11.31	9.31	S, US
14	341	1/8	**M1135107.00**	√	CM34D25NZ61	P353-34	180	90	1.0	465	11.31	9.31	S, US
14	341	1/8	**M1135140.00**	√	CM34D25NZ72	P353-34	180	180	0.5	465	11.31	9.31	S, US
21	371	1/4	**M1135117.00**	√	CM34D25NZ52	P353-34	124	90	1.1	413	13.31	11.31	S, US
21	371	1/4	**M1135141.00**	√	CM34D25NZ73	P353-34	124	180	0.6	413	13.31	11.31	S, US
27	305	1/4	**M1135115.00**	√	CM34D25NZ51	P353-34	91	90	1.5	374	13.31	11.31	S, US
27	305	1/4	**M1135142.00**	√	CM34D25NZ74	P353-34	91	180	0.8	374	13.31	11.31	S, US
42	280	1/4	**M1135108.00**	√	CM34D25NZ53	P353-34	58	90	2.3	327	13.31	11.31	S, US
42	280	1/4	**M1135143.00**	√	CM34D25NZ75	P353-34	58	180	1.2	327	13.31	11.31	S, US
50	250	1/4	**M1135109.00**	√	CM34D25NZ54	P353-34	50	90	2.3	315	13.31	11.31	S, US
50	250	1/4	**M1135144.00**	√	CM34D25NZ76	P353-34	50	180	1.2	315	13.31	11.31	S, US
62	220	1/4	**M1135110.00**	√	CM34D25NZ55	P353-34	43	90	2.3	303	13.31	11.31	S, US
62	220	1/4	**M1135145.00**	√	CM34D25NZ77	P353-34	43	180	1.2	303	13.31	11.31	S, US
83	155	1/4	**M1135114.00**	√	CM34D25NZ57	P352-34	29	90	2.3	267	13.31	11.31	S, US
83	155	1/4	**M1135146.00**	√	CM34D25NZ78	P352-34	29	180	1.2	267	13.31	11.31	S, US
125	100	1/4	**M1135111.00**	√	CM34D25NZ56	P352-34	23	90	2.0	256	13.31	11.31	S, US
125	100	1/4	**M1135147.00**	√	CM34D25NZ79	P352-34	23	180	1.0	256	13.31	11.31	S, US
165	70	1/4	**M1135112.00**	√	CM34D25NZ58	P352-34	15	90	2.0	232	13.31	11.31	S, US
165	70	1/4	**M1135148.00**	√	CM34D25NZ80	P352-34	15	180	1.0	232	13.31	11.31	S, US
250	45	1/4	**M1135116.00**	√	CM34D25NZ60	P352-34	10	90	2.0	201	13.31	11.31	S, US
250	45	1/4	**M1135149.00**	√	CM34D25NZ81	P352-34	10	180	1.0	201	13.31	11.31	S, US
500	25	1/4	**M1135113.00**	√	CM34D25NZ59	P352-34	5	90	2.0	194	13.31	11.31	S, US
500	25	1/4	**M1135150.00**	√	CM34D25NZ82	P352-34	5	180	1.0	194	13.31	11.31	S, US

C/A - Check Availability.

♥ Note listing on inside back flap.
Specifications are subject to change without notice.

12 Volts - TENV - PE350 Series

Output RPM	F.L. Torque (Lb In.)	Input HP	Catalogue Number	Availability	Model Number	Gearmotor Type & Frame	Ratio to 1	Arm. Volts DC	F.L. Amps DC	Over-hung Load (lb.)	Dimensions (inches) XL	Dimensions (inches) XH	♥Notes
14	341	1/8	**M1135243.00**	√	CM34D25NZ154	P353-34	180	12	8.7	465	11.05	9.05	S, US
42	325	1/4	**M1135244.00**	√	CM34D25NZ155	P353-34	58	12	21.0	327	13.31	11.31	S, US
62	220	1/4	**M1135245.00**	√	CM34D25NZ156	P353-34	43	12	21.0	303	13.31	11.31	S, US
83	155	1/4	**M1135246.00**	√	CM34D25NZ157	P352-34	29	12	21.0	267	13.31	11.31	S, US

♥ Note listing on inside back flap.
Specifications are subject to change without notice.

PE350 SERIES - DC

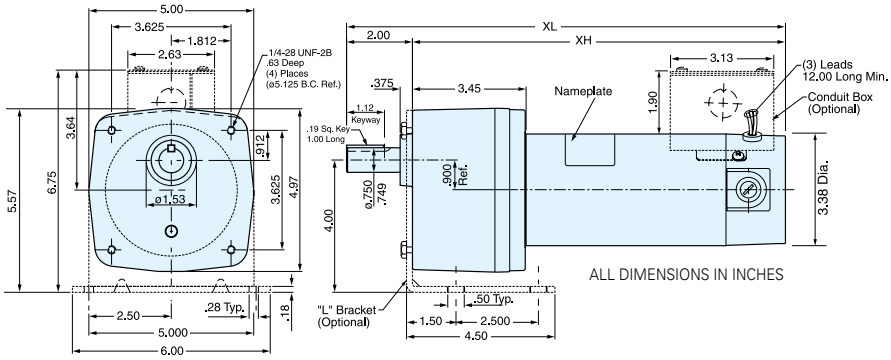

Gearmotors

Parallel Shaft - P1100 Series - DC

SCR Rated - 105-1112 In-Lbs. Torque
Low Voltage - 320-1087 In-Lbs. Torque

General Specifications - SCR Rated Gearmotors:

- Performance matched for continuous duty service over 60:1 speed range.
- Constant torque throughout the speed range when powered by a full-wave unfiltered SCR-type adjustable speed control having a typical form factor of 1.3 to 1.4.

General Specifications - Low Voltage Gearmotors:

- Performance matched for continuous duty service.
- Designed for battery power or can be used with a low voltage controller with form factor up to 1.05.

Features:

- Rugged die cast aluminum gear housing for maximum gear and bearing support.
- Precision machined gearing, hardened for maximum load capability.
- All gearing designed and rated to AGMA class 9 standards, and to withstand momentary shock overload of 200%.
- Oversized output bearings for greater overhung load capacity and long life.
- High carbon alloy output shaft provides maximum strength and rigidity.
- All needle bearing journals are precision ground after heat treating to provide maximum fit and finish.
- Heavy duty industrial oil seals keep lubricant in and dirt out.
- Gears and bearings are splash lubricated with permanent, heavy duty gear oil.
- Conduit box included as standard.

Application Notes:

- These gearmotors are designed for mounting at any angle, but motor below the reducer should be avoided to prevent leakage of lubricant into the motor should the motor shaft seal fail.
- Motor's stall torque could exceed recommended full load torques. A current limiting device such as an SCR control should be used to prevent damage. This issue is even more critical for low voltage motors. Typically no controller is used since motor is connected directly to a battery; so some type of current limit or fusing should be considered.
- Overhung load capacities shown are at center of output shaft.
- For additional information, see Bulletin 1830.
- **Bison®*/Dayton®* direct interchange.**

*Bison is believed to be the trademark or trade name of Bison Gear & Engineering Corporation and is not owned or controlled by Regal Beloit Corporation.

*Dayton is a trademark or trade name of Dayton Electric Manufacturing Company and is not owned or controlled by Regal Beloit Corporation.

Gearmotors

Parallel Shaft - P1100 Series - DC

SCR Rated - 105-1112 In-Lbs. Torque
Low Voltage - 320-1087 In-Lbs. Torque

90 Volts - Totally Enclosed - Rigid Base - P1100 Series

Output RPM	F.L. Torque (Lb In.)	Input HP	Catalogue Number	Availability	Model Number	Gearmotor Type & Frame	Ratio to 1	Arm. Volts DC	F.L. Amps DC	Over-hung Load (lb.)	Dimensions (inches) XL	Dimensions (inches) XH	♥Notes
8	1087	1/4	**108700.00**	√	CM4D17NZ17	P1103-48	212	90	2.7	700	14.24	12.74	S, US, 12
12	1030	1/4	**108701.00**	√	CM4D17NZ18	P1103-48	143	90	2.7	700	14.24	12.74	S, US, 12
18	750	1/4	**108702.00**	√	CM4D17NZ19	P1103-48	95	90	2.7	700	14.24	12.74	S, US, 12
42	353	1/4	**108703.00**	√	CM4D17NZ20	P1102-48	42	90	2.7	650	14.24	12.74	S, US, 12
60	238	1/4	**108704.00**	√	CM4D17NZ21	P1102-48	29	90	2.7	625	14.24	12.74	S, US, 12
92	160	1/4	**108705.00**	√	CM4D17NZ22	P1102-48	19	90	2.7	575	14.24	12.74	S, US, 12
135	105	1/4	**108706.00**	√	CM4D17NZ23	P1102-48	13	90	2.7	525	14.24	12.74	S, US, 12
18	1112	1/2	**108707.00**	√	CM4D17FZ23	P1103-48	95	90	5.0	700	16.49	14.99	S, US
33	822	1/2	**108708.00**	√	CM4D17FZ24	P1103-48	53	90	5.0	650	16.49	14.99	S, US
42	705	1/2	**108709.00**	√	CM4D17FZ25	P1102-48	42	90	5.0	650	16.49	14.99	S, US
60	476	1/2	**108710.00**	√	CM4D17FZ26	P1102-48	29	90	5.0	625	16.49	14.99	S, US
92	320	1/2	**108711.00**	√	CM4D17FZ27	P1102-48	19	90	5.0	575	16.49	14.99	S, US
135	210	1/2	**108712.00**	√	CM4D17FZ28	P1102-48	13	90	5.0	525	16.49	14.99	S, US

Note 12: TENV

♥ Note listing on inside back flap.
Specifications are subject to change without notice.

12 Volts - Totally Enclosed - Rigid Base - P1100 Series

Output RPM	F.L. Torque (Lb In.)	Input HP	Catalogue Number	Availability	Model Number	Gearmotor Type & Frame	Ratio to 1	Arm. Volts DC	F.L. Amps DC	Over-hung Load (lb.)	Dimensions (inches) XL	Dimensions (inches) XH	♥Notes
8	1087	1/4	**108729.00**	√	CM4D17NZ43	P1103-48	212	12	21	700	13.74	12.24	S, US, 12
60	238	1/4	**108730.00**	√	CM4D17NZ44	P1102-48	29	12	21	625	13.74	12.24	S, US, 12
42	705	1/2	**108731.00**	√	CM4D17FZ52	P1102-48	42	12	40	650	15.31	13.81	S, US
92	320	1/2	**108732.00**	C/A	CM4D17FZ53	P1102-48	19	12	40	575	15.31	13.81	S, US

C/A - Check Availability.
Note 12: TENV

♥ Note listing on inside back flap.
Specifications are subject to change without notice.

P1100 SERIES - DC

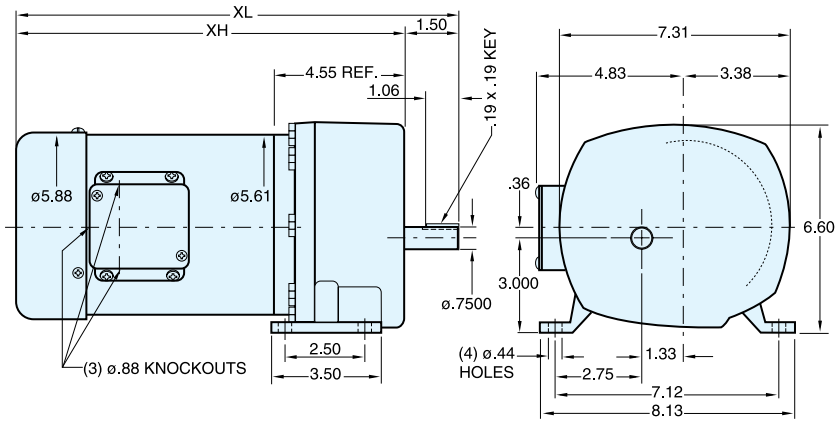

ALL DIMENSIONS IN INCHES

Gearmotors

Right-Angle DC Gearmotors

SCR Rated - 5-135 In-Lbs. Torque
Low Voltage - 25-135 In-Lbs. Torque

General Specifications - SCR Rated Gearmotors:

- Performance matched for continuous duty service over 60:1 speed range.
- Constant torque throughout the speed range when powered by a full-wave unfiltered SCR-type adjustable speed control having a typical form factor of 1.3 to 1.4.

General Specifications - Low Voltage Gearmotors:

- Performance matched for continuous duty service.
- Designed for battery power or can be used with a low voltage controller with form factor up to 1.05.

Features:

- Worm-type right-angle gearing features hardened, steel worm shaft with bronze worm wheel for long life and quiet operation.
- Precision machined aluminum gear housing.
- Lubrication is permanent with an oil bath.
- Gearbox has all ball bearings.
- Output shaft is field interchangeable from left hand to right hand style by reassembly.
- Double output shaft available as a factory option.
- Optional conduit box available, see page 238.
- Optional gearbox base available (10 Series only), see page 238.

Application Notes:

- These right-angle gearmotors have a lubrication breather positioned for horizontal mounting. For other mountings, the breather plug must be reoriented by using a 90 deg 1/8" NPT taper pipe elbow (See drawing). This elbow is not offered as a LEESON® motor accessory.
- These gearmotors are designed for mounting at any angle, but motor below the reducer should be avoided to prevent leakage of lubricant into the motor should the motor shaft seal fail.
- Overhung load capacities shown are at center of output shaft.

10 SERIES - DC

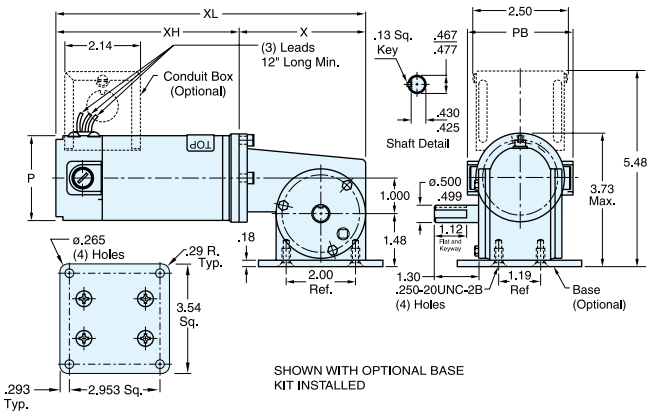

13 SERIES - DC

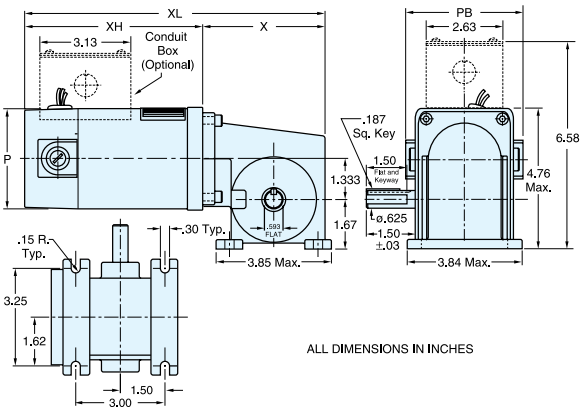

SCR Rated - 5-135 In-Lbs. Torque &
Low Voltage - 25-135 In-Lbs. Torque

90 & 180 Volts - TENV - Right-Angle

Output RPM	F.L. Torque (Lb In.)	Input HP	Catalogue Number	Availability	Model Number	Gearmotor Type & Frame	Ratio to 1	Arm. Volts DC	F.L. Amps DC	Over-hung Load (lb.)	Dimensions (inches) P	PB	X	XL	XH	♥Notes
42	22	1/17	**M1115018.00**	√	985.504	10F60-25D	60	90	0.9	185	2.5	3	3.6	8.79	5.19	S, US
62	19	1/17	**M1115019.00**	√	985.505	10F40-25D	40	90	0.9	185	2.5	3	3.6	8.79	5.19	S, US
125	16	1/17	**M1115020.00**	√	985.506	10F20-25D	20	90	0.9	185	2.5	3	3.6	8.79	5.19	S, US
250	10	1/17	**M1115021.00**	√	985.509	10F10-25D	10	90	1.0	185	2.5	3	3.6	8.79	5.19	S, US
500	5	1/17	**M1115022.00**	√	985.507	10F05-25D	5	90	1.0	185	2.5	3	3.6	8.79	5.19	S, US
42	30	1/12	**M1135053.00**	√	CM34D25NZ30	13F60-34A	60	180	0.5	235	3.38	4	4.5	9.64	5.14	S, US
62	35	1/12	**M1135054.00**	C/A	CM34D25NZ31	13F40-34A	40	180	0.5	235	3.38	4	4.5	9.64	5.14	S, US
125	18	1/12	**M1135055.00**	√	CM34D25NZ32	13F20-34A	20	180	0.5	235	3.38	4	4.5	9.64	5.14	S, US
250	10	1/12	**M1135056.00**	C/A	CM34D25NZ47	13F10-34A	10	180	0.5	235	3.38	4	4.5	9.64	5.14	S, US
500	5	1/12	**M1135057.00**	C/A	CM34D25NZ48	13F05-34A	5	180	0.5	235	3.38	4	4.5	9.64	5.14	S, US
42	80	1/8	**M1135069.00**	√	CM34D25NZ18	13F60-34C	60	90	1.4	235	3.38	4	4.5	10.64	6.14	S, US
62	70	1/8	**M1135038.00**	√	CM34D25NZ6	13F40-34C	40	90	1.4	235	3.38	4	4.5	10.64	6.14	S, US
62	70	1/8	**M1135058.00**	√	CM34D25NZ26	13F40-34C	40	180	0.7	235	3.38	4	4.5	10.64	6.14	S, US
125	45	1/8	**M1135039.00**	√	CM34D25NZ7	13F20-34C	20	90	1.4	235	3.38	4	4.5	10.64	6.14	S, US
125	45	1/8	**M1135059.00**	√	CM34D25NZ27	13F20-34C	20	180	0.7	235	3.38	4	4.5	10.64	6.14	S, US
250	25	1/8	**M1135040.00**	√	CM34D25NZ8	13F10-34C	10	90	1.4	235	3.38	4	4.5	10.64	6.14	S, US
250	25	1/8	**M1135060.00**	√	CM34D25NZ28	13F10-34C	10	180	0.7	235	3.38	4	4.5	10.64	6.14	S, US
500	13	1/8	**M1135041.00**	√	CM34D25NZ9	13F05-34C	5	90	1.4	235	3.38	4	4.5	10.64	6.14	S, US
500	13	1/8	**M1135061.00**	C/A	CM34D25NZ29	13F05-34C	5	180	0.7	235	3.38	4	4.5	10.64	6.14	S, US
62	135	1/4	**M1135042.00**	√	CM34D25NZ10	13F40-34G	40	90	2.3	235	3.38	4	4.5	12.64	8.14	S, US
62	135	1/4	**M1135062.00**	√	CM34D25NZ33	13F40-34G	40	180	1.3	235	3.38	4	4.5	12.64	8.14	S, US
83	125	1/4	**M1135043.00**	√	CM34D25NZ11	13F30-34G	30	90	2.3	235	3.38	4	4.5	12.64	8.14	S, US
83	125	1/4	**M1135063.00**	√	CM34D25NZ34	13F30-34G	30	180	1.3	235	3.38	4	4.5	12.64	8.14	S, US
125	90	1/4	**M1135044.00**	√	CM34D25NZ12	13F20-34G	20	90	2.3	235	3.38	4	4.5	12.64	8.14	S, US
125	90	1/4	**M1135064.00**	√	CM34D25NZ35	13F20-34G	20	180	1.3	235	3.38	4	4.5	12.64	8.14	S, US
250	50	1/4	**M1135045.00**	√	CM34D25NZ13	13F10-34G	10	90	2.3	235	3.38	4	4.5	12.64	8.14	S, US
250	50	1/4	**M1135065.00**	√	CM34D25NZ36	13F10-34G	10	180	1.3	235	3.38	4	4.5	12.64	8.14	S, US
500	30	1/4	**M1135046.00**	√	CM34D25NZ14	13F05-34G	5	90	2.3	235	3.38	4	4.5	12.64	8.14	S, US
500	30	1/4	**M1135066.00**	√	CM34D25NZ37	13F05-34G	5	180	1.3	235	3.38	4	4.5	12.64	8.14	S, US

C/A - Check Availability.

♥ Note listing on inside back flap.
Specifications are subject to change without notice.

12 Volts - TENV - Right-Angle Series

Output RPM	F.L. Torque (Lb In.)	Input HP	Catalogue Number	Availability	Model Number	Gearmotor Type & Frame	Ratio to 1	Arm. Volts DC	F.L. Amps DC	Over-hung Load (lb.)	Dimensions (inches) P	PB	X	XL	XH	♥Notes
42	80	1/8	**M1135249.00**	C/A	CM34D25NZ158	13F60-34	60	12	11.0	235	3.38	4.21	4.5	10.39	5.89	S, US
250	25	1/8	**M1135250.00**	C/A	CM34D25NZ159	13F10-34	10	12	11.0	235	3.38	4.21	4.5	10.39	5.89	S, US
62	135	1/4	**M1135251.00**	√	CM34D25NZ160	13F40-34	40	12	21.0	235	3.38	4.21	4.5	12.64	8.14	S, US
125	90	1/4	**M1135252.00**	√	CM34D25NZ161	13F20-34	20	12	21.0	235	3.38	4.21	4.5	12.64	8.14	S, US

C/A - Check Availability.

♥ Note listing on inside back flap.
Specifications are subject to change without notice.

Gearmotors

Bravo® Series 12 SUB-FHP - DC Right-Angle Gearmotors

General Specifications - SCR Rated Gearmotors:

- Performance matched for continuous duty service over 60:1 speed range.
- Constant torque throughout the speed range when powered by a full-wave unfiltered SCR-type adjustable speed control having a typical form factor of 1.3 to 1.4.

General Specifications - Low Voltage Gearmotors:

- Performance matched for continuous duty service.
- Designed for battery power or can be used with a low voltage controller with form factor up to 1.05.

Features:

- Worm-type right-angle gearing features hardened, steel worm shaft with bronze worm wheel for long life and quiet operation.
- Single piece die cast aluminum alloy housing is vacuum impregnated with Resinol®* RT for protection and sealing.
- Light weight gearbox combines high tensile strength along with being precision machined for alignment of bearings and gearing.
- High temperature nitrile seals for optimum seal life.
- Gearbox provided with solid output shaft, but can be converted to a hollow output shaft. Simply remove the solid shaft by removing the snap rings.
- T-base feet provided are removable to convert to face mounting.
- Optional conduit box available, see page 238.

*Resinol is believed to be a trademark or trade name of Henkel IP & Holding GMBH and is not owned or controlled by Regal Beloit Corporation.

Bravo® Series 12 SUB-FHP - DC
Right-Angle Gearmotors

90 Volts - Totally Enclosed - Right-Angle

Output RPM	F.L. Torque (Lb.In.)	Input HP	Catalogue Number	Availability	Model Number	Enclosure	Gearmotor Type & Frame	Ratio to 1	Arm. Volts DC	F.L. Amps. DC	♥Notes
28	125	1/8	**M1135292.00**	√	CM34D17NZ31	TENV	12B60-34D	61.0	90	1.6	S, US, 12
45	87	1/8	**M1135291.00**	C/A	CM34D17NZ30	TENV	12B39-34D	39.0	90	1.6	S, US, 12
58	158	1/4	**M1135290.00**	√	CM34D17FZ7	TEFC	12B30-34G	30.0	90	2.8	S, US
90	100	1/4	**M1135289.00**	√	CM34D17FZ6	TEFC	12B19-34G	19.0	90	2.6	S, US
115	85	1/4	**M1135288.00**	C/A	CM34D17FZ5	TEFC	12B15-34G	15.0	90	2.6	S, US
167	61	1/4	**M1135287.00**	√	CM34D17FZ4	TEFC	12B11-34G	10.6	90	2.6	S, US
250	46	1/4	**M1135286.00**	√	CM34D17FZ3	TEFC	12B7-34G	7.0	90	2.6	S, US

C/A - Check Availability.
Note 12: TENV

♥ Note listing on inside back flap.
Specifications are subject to change without notice.

12 Volts - TENV - Right-Angle

Output RPM	F.L. Torque (Lb.In.)	Input HP	Catalogue Number	Availability	Model Number	Enclosure	Gearmotor Type & Frame	Ratio to 1	Arm. Volts DC	F.L. Amps. DC	♥Notes
27	134	1/8	**M1135285.00**	C/A	CM34D17NZ29	TENV	12B60-34C	61.0	12	14.0	S, US
45	94	1/8	**M1135284.00**	C/A	CM34D17NZ28	TENV	12B39-34C	39.0	12	15.0	S, US
58	158	1/4	**M1135297.00**	√	CM34D17NZ36	TENV	12B30-34F	30.0	12	24.0	S, US
90	100	1/4	**M1135296.00**	C/A	CM34D17NZ35	TENV	12B19-34F	19.0	12	24.0	S, US
115	85	1/4	**M1135295.00**	C/A	CM34D17NZ34	TENV	12B15-34F	15.0	12	23.0	S, US
167	61	1/4	**M1135294.00**	C/A	CM34D17NZ33	TENV	12B11-34F	10.6	12	21.0	S, US
250	46	1/4	**M1135293.00**	√	CM34D17NZ32	TENV	12B7-34F	7.0	12	23.0	S, US

C/A - Check Availability.

♥ Note listing on inside back flap.
Specifications are subject to change without notice.

Notes:

1 Conduit box not supplied with the gearmotor. Mounting provisions are provided and can use conduit box kit catalog number M1760007.00 found on page 238.

2 For solid double output shaft, consult factory.

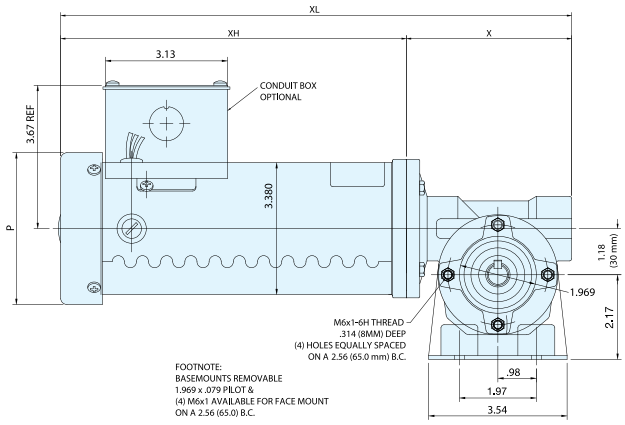

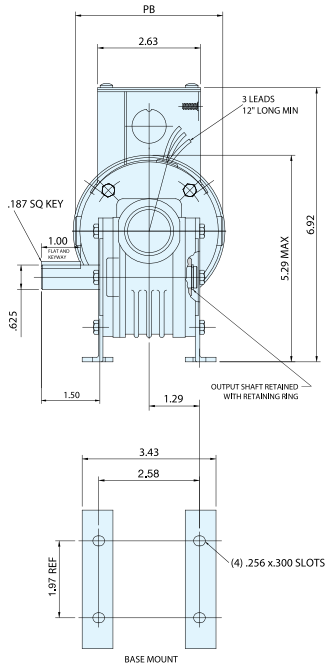

SCR 90 Volt Rated (IN)

P	X	XL	XH	PB
3.38	4.32	11.07	6.75	4.00
3.38	4.32	11.07	6.75	4.00
3.88	4.32	13.16	8.84	3.76
3.88	4.32	13.16	8.84	3.76
3.88	4.32	13.16	8.84	3.76
3.88	4.32	13.16	8.84	3.76
3.88	4.32	13.16	8.84	3.76

Low Voltage 12 Volt (IN)

P	X	XL	XH	PB
3.38	4.32	10.57	6.25	4.21
3.38	4.32	10.57	6.25	4.21
3.38	4.32	11.82	7.50	4.21
3.38	4.32	11.82	7.50	4.21
3.38	4.32	11.82	7.50	4.21
3.38	4.32	11.82	7.50	4.21
3.38	4.32	11.82	7.50	4.21

Gearmotors

IP55 Washguard® Gearmotors - P300 Series - DC

General Specifications - SCR Rated Gearmotors:

- Performance matched for continuous duty service over 60:1 speed range.
- Constant torque throughout the speed range when powered by a full-wave unfiltered SCR-type adjustable speed control having a typical form factor of 1.3 to 1.4.

General Specifications - Low Voltage Gearmotors:

- Performance matched for continuous duty service.
- Designed for battery power or can be used with a low voltage controller with form factor up to 1.05.

Features:

- Gearbox output shafts are coated with Microlon®* 3300 fortified Teflon®* for superior corrosion resistance.
- Frame, endshields, armature and interior components protected by enamel and polyester compounds for resistance to moisture, acids, alkalies and oil.
- Precision machined in-line steel gears.
- First stage steel helical gear followed by spur-type gears.
- Lubrication is permanent semi-fluid grease, reducing possibility of leakage.
- Output shafts have needle bearings for high load capacities.
- Gearbox Shafts are hardened steel.
- Cast conduit box with threaded conduit holes and nitrile gaskets keep water out.
- Conduit box cover is made from 304 stainless steel.
- For any condensation that may accumulate inside the motor, a one-way stainless steel vapor vent is provided.
- All hardware is stainless steel.
- Painted with white epoxy for superior corrosion resistance and protection.
- Machined fits between the endbells and motor frame are sealed with gaskets.
- Thru-bolt heads and nuts sealed with fiber washers.
- O-rings under each threaded brush cover.

Application Notes:

- Extended life in wet, high humidity applications.
- Design repels water from entering motor.
- Internal components protected against rust and corrosion.
- These gearmotors are designed for mounting at any angle, but motor below the reducer should be avoided to prevent leakage of lubricant into the motor should the motor shaft seal fail.
- Overhung load capacities shown are at center of output shaft.
- Motor's stall torque could exceed recommended full load torques. A current limiting device such as an SCR control should be used to prevent damage. This issue is even more critical for low voltage motors. Typically no controller is used since motor is connected directly to a battery; so some type of current limit or fusing should be considered.
- USDA Approved white epoxy finish.
- **Bison®*/Dayton®* direct interchange.**

*Bison is believed to be the trademark or trade name of Bison Gear & Engineering Corporation and is not owned or controlled by Regal Beloit Corporation.

*Dayton is a trademark or trade name of Dayton Electric Manufacturing Company and is not owned or controlled by Regal Beloit Corporation.

*Microlon is a trademark of Micro Surface Corporation and is not owned or controlled by Regal Beloit Corporation.

*Teflon is a trademark of The Chemours Company and is not owned or controlled by Regal Beloit Corporation.

Gearmotors

IP55 Washguard® Gearmotors - P300 Series - DC

90 Volts - TENV - P300 Series

Output RPM	F.L. Torque (Lb In.)	Input HP	Catalogue Number	Availability	Model Number	Gearmotor Type & Frame	Ratio to 1	Arm. Volts DC	F.L. Amps DC	Over-hung Load (lb.)	Dimensions (inches) P	BD	X	XL	XH	♥Notes
5	353	1/20	**M1125261.00**	√	CM31D17VZ5	P303-31	336	90	0.8	565	3.13	3.8	3.54	10.44	8.94	S, US
31	220	1/8	**M1125262.00**	√	CM31D17VZ6	P303-31	58	90	1.6	327	3.13	3.8	3.54	11.94	10.44	S, US
51	130	1/8	**M1125263.00**	√	CM31D17VZ7	P302-31	35	90	1.6	277	3.13	3.8	3.54	11.94	10.44	S, US
94	77	1/8	**M1125264.00**	√	CM31D17VZ8	P302-31	19	90	1.6	236	3.13	3.8	3.54	11.94	10.44	S, US
167	43	1/8	**M1125265.00**	√	CM31D17VZ9	P302-31	11	90	1.6	197	3.13	3.8	3.54	11.94	10.44	S, US

♥ Note listing on inside back flap.
Specifications are subject to change without notice.

12 Volts - TENV - P300 Series

Output RPM	F.L. Torque (Lb In.)	Input HP	Catalog Number	Availability	Model Number	Gearmotor Type & Frame	Ratio to 1	Arm. Volts DC	F.L. Amps DC	Over-hung Load (lb.)	Dimensions (inches) P	BD	X	XL	XH	♥Notes
5	353	1/20	**M1125266.00**	√	CM31D17VZ10	P303-31	336	12	6.4	565	3.13	3.8	3.54	10.44	8.94	S, US
31	220	1/8	**M1125267.00**	√	CM31D17VZ11	P303-31	58	12	11	327	3.13	4.43	3.54	11.44	9.94	S, US

♥ Note listing on inside back flap.
Specifications are subject to change without notice.

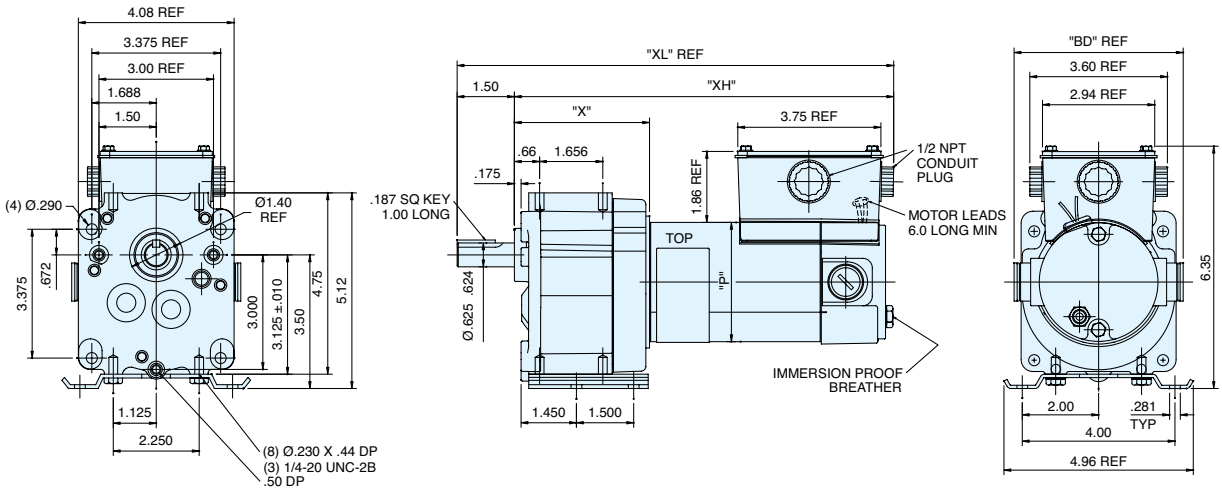

Gearmotors

IP55 Washguard® Gearmotors - PE350 - DC

General Specifications - SCR Rated Gearmotors:

- Performance matched for continuous duty service over 60:1 speed range.
- Constant torque throughout the speed range when powered by a full-wave unfiltered SCR-type adjustable speed control having a typical form factor of 1.3 to 1.4.

General Specifications - Low Voltage Gearmotors:

- Performance matched for continuous duty service.
- Designed for battery power or can be used with a low voltage controller with form factor up to 1.05.

Features:

- Gearbox output shafts are coated with Microlon®* 3300 fortified Teflon®* for superior corrosion resistance.
- Frame, endshields, armature and interior components protected by enamel and polyester compounds for resistance to moisture, acids, alkalies and oil.
- Precision machined in-line steel gears.
- First stage steel helical gear followed by spur-type gears.
- Lubrication is permanent semi-fluid grease, reducing possibility of leakage.
- Output shafts have needle bearings for high load capacities.
- Gearbox Shafts are hardened steel.
- Cast conduit box with threaded conduit holes and nitrile gaskets keep water out.
- Conduit box cover is made from 304 stainless steel.
- For any condensation that may accumulate inside the motor, a one-way stainless steel vapor vent is provided.
- All hardware is stainless steel.
- Painted with white epoxy for superior corrosion resistance and protection.
- Machined fits between the endbells and motor frame are sealed with gaskets.
- Thru-bolt heads and nuts sealed with fiber washers.
- O-rings under each threaded brush cover.

Application Notes:

- Extended life in wet, high humidity applications.
- Design repels water from entering motor.
- Internal components protected against rust and corrosion.
- These gearmotors are designed for mounting at any angle, but motor below the reducer should be avoided to prevent leakage of lubricant into the motor should the motor shaft seal fail.
- Overhung load capacities shown are at center of output shaft.
- Motor's stall torque could exceed recommended full load torques. A current limiting device such as an SCR control should be used to prevent damage. This issue is even more critical for low voltage motors. Typically no controller is used since motor is connected directly to a battery; so some type of current limit or fusing should be considered.
- USDA Approved white epoxy finish.
- **Bodine®*/Baldor®* direct interchange.**

*Baldor is believed to be the trademark or trade name of ABB ASEA Brown Boveri Ltd. and is not owned or controlled by Regal Beloit Corporation.

*Bodine is believed to be the trademark or trade name of Bodine Electric Corporation and is not owned or controlled by Regal Beloit Corporation.

*Microlon is a trademark of Micro Surface Corporation and is not owned or controlled by Regal Beloit Corporation.

*Teflon is a trademark of The Chemours Company and is not owned or controlled by Regal Beloit Corporation.

90 Volts - TENV - PE350 Series - Parallel Shaft

Output RPM	F.L. Torque (Lb In.)	Input HP	Catalogue Number	Availability	Model Number	Gearmotor Type & Frame	Ratio to 1	Arm. Volts DC	F.L. Amps DC	Over-hung Load (lb.)	Dimensions (inches) P	BD	X	XL	XH	♥Notes
14	341	1/8	**M1125268.00**	√	CM31D25VZ1	P353-31	180	90	1.5	465	3.13	3.8	3.45	11.84	9.84	S, US
42	280	1/4	**M1125269.00**	√	CM32D25VZ1	P353-32	58	90	2.6	327	3.25	3.8	3.45	13.84	11.84	S, US
83	155	1/4	**M1125270.00**	√	CM32D25VZ2	P353-32	29	90	2.6	267	3.25	3.8	3.45	13.84	11.84	S, US
250	45	1/4	**M1125271.00**	√	CM32D25VZ3	P352-32	10	90	2.6	201	3.25	3.8	3.45	13.84	11.84	S, US
500	25	1/4	**M1125272.00**	√	CM32D25VZ4	P352-32	5	90	2.6	194	3.25	3.8	3.45	13.84	11.84	S, US

♥ Note listing on inside back flap.
Specifications are subject to change without notice.

12 Volts - TENV - PE350 Series - Parallel Shaft

Output RPM	F.L. Torque (Lb In.)	Input HP	Catalogue Number	Availability	Model Number	Gearmotor Type & Frame	Ratio to 1	Arm. Volts DC	F.L. Amps DC	Over-hung Load (lb.)	Dimensions (inches) P	BD	X	XL	XH	♥Notes
14	341	1/8	**M1125273.00**	√	CM31D25VZ2	P353-31	180	12	12	465	3.13	4.43	3.45	11.58	9.58	S, US
42	325	1/4	**M1125274.00**	C/A	CM32D25VZ5	P353-32	58	12	20	327	3.25	4.43	3.45	13.84	11.84	S, US

C/A - Check Availability.

♥ Note listing on inside back flap.
Specifications are subject to change without notice.

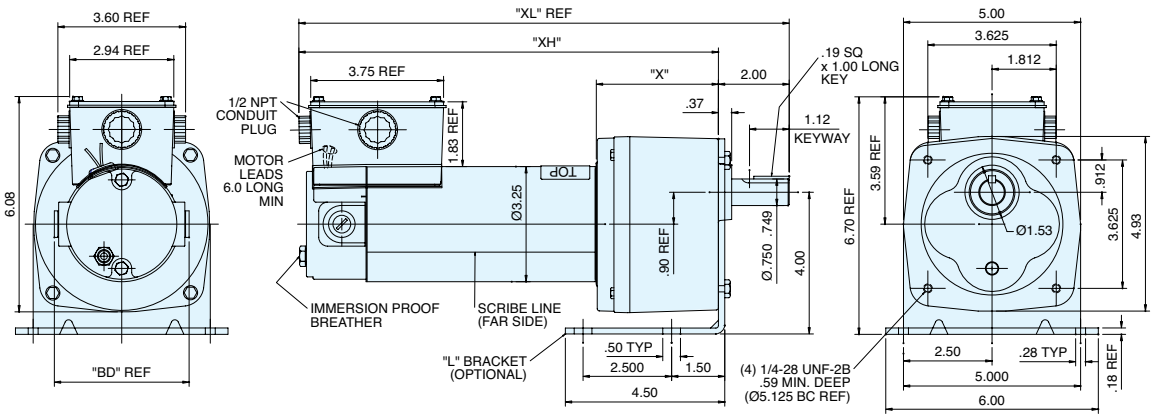

Gearmotors

IP55 Washguard® Gearmotors - Right-Angle - DC

General Specifications - SCR Rated Gearmotors:

- Performance matched for continuous duty service over 60:1 speed range.
- Constant torque throughout the speed range when powered by a full-wave unfiltered SCR-type adjustable speed control having a typical form factor of 1.3 to 1.4.

General Specifications - Low Voltage Gearmotors:

- Performance matched for continuous duty service.
- Designed for battery power or can be used with a low voltage controller with form factor up to 1.05.

Features:

- 303 stainless steel gearbox output shaft.
- Frame, endshields, armature and interior components protected by enamel and polyester compounds for resistance to moisture, acids, alkalies and oil.
- Cast conduit box with threaded conduit holes and nitrile gaskets keep water out.
- Conduit box cover is made from 304 stainless steel.
- For any condensation that may accumulate inside the motor, a one-way stainless steel vapor vent is provided.
- All hardware is stainless steel.
- Painted with white epoxy for superior corrosion resistance and protection.
- Machined fits between the endbells and motor frame are sealed with gaskets.
- Thru-bolt heads and nuts sealed with fiber washers.
- O-rings under each threaded brush cover.
- Worm-type right-angle gearing features hardened, steel worm shaft with bronze worm wheel for long life and quiet operation.
- Precision machined aluminum gear housing.
- Lubrication is permanent with an oil bath.
- Gearbox has all ball bearings.
- Output shaft is field interchangeable from left hand to right hand style by reassembly.
- Double output shaft available as a factory option.

Application Notes:

- These right-angle gearmotors have a lubrication breather positioned for horizontal mounting. For other mountings, the breather plug must be reoriented by using a 90 deg 1/8" NPT taper pipe elbow. This elbow is not offered as a LEESON® motor accessory.
- These gearmotors are designed for mounting at any angle, but motor below the reducer should be avoided to prevent leakage of lubricant into the motor should the motor shaft seal fail.
- Overhung load capacities shown are at center of output shaft.
- For additional information, see Bulletin 1830.

IP55 Washguard® Gearmotors - Right-Angle - DC

90 Volts - TENV - Right-Angle

Output RPM	F.L. Torque (Lb In.)	Input HP	Catalogue Number	Availability	Model Number	Gearmotor Type & Frame	Ratio to 1	Arm. Volts DC	F.L. Amps DC	Over-hung Load (lb.)	Dimensions (inches)					♥Notes
											P	BD	X	XL	XH	
42	80	1/8	**M1125275.00**	√	CM31D25VZ3	13F60-31	60	90	2.2	235	3.13	3.8	4.5	10.86	6.36	S, US
250	25	1/8	**M1125276.00**	√	CM31D25VZ4	13F10-31	10	90	2.2	235	3.13	3.8	4.5	10.86	6.36	S, US
62	135	1/4	**M1125277.00**	√	CM32D25VZ6	13F40-32	40	90	3.7	235	3.25	3.8	4.5	12.86	8.36	S, US
125	90	1/4	**M1125278.00**	√	CM32D25VZ7	13F20-32	20	90	3.7	235	3.25	3.8	4.5	12.86	8.36	S, US
250	50	1/4	**M1125279.00**	√	CM32D25VZ8	13F10-32	10	90	3.7	235	3.25	3.8	4.5	12.86	8.36	S, US

♥ Note listing on inside back flap.
Specifications are subject to change without notice.

12 Volts - TENV - Right-Angle

Output RPM	F.L. Torque (Lb In.)	Input HP	Catalogue Number	Availability	Model Number	Gearmotor Type & Frame	Ratio to 1	Arm. Volts DC	F.L. Amps DC	Over-hung Load (lb.)	Dimensions (inches)					♥Notes
											P	BD	X	XL	XH	
62	135	1/4	**M1125280.00**	√	CM32D25VZ9	13F40-32	40	12	28	235	3.25	4.43	4.5	12.36	7.86	S, US
125	90	1/4	**M1125281.00**	√	CM32D25VZ10	13F20-32	20	12	28	235	3.25	4.43	4.5	12.36	7.86	S, US

♥ Note listing on inside back flap.
Specifications are subject to change without notice.

13 SERIES - DC

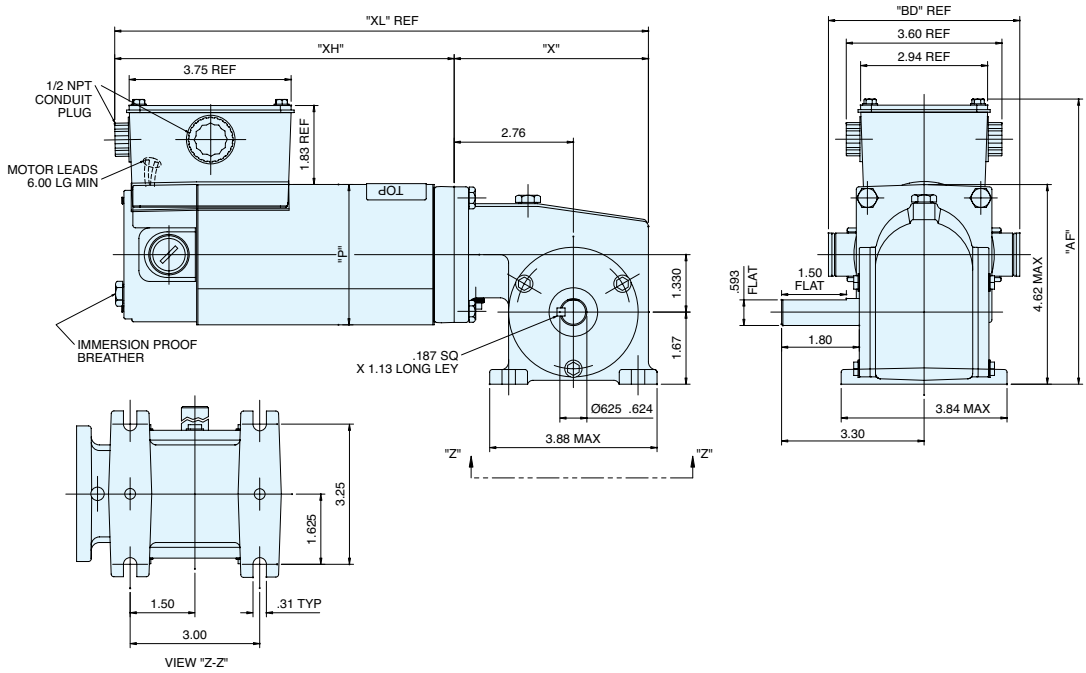

Gearmotors

Parallel Shaft - SUB-FHP - AC Gearmotors

12-100 In-Lbs. Output Torque

Features:

- Permanent split capacitor design rated for 115 VAC 60 HZ input.
- Precision machined in-line steel gears.
- First stage steel helical gear followed by spur-type gears.
- Lubrication is permanent semi-fluid grease, reducing possibility of leakage.
- Output shafts have needle bearings for high load capacities.
- Shafts are hardened steel.
- Optional conduit box and PZ gearmotor mounting bracket available.

Application Notes:

- These gearmotors are designed for mounting at any angle, but motor below the reducer should be avoided to prevent leakage of lubricant into the motor should the motor shaft seal fail.
- The motor's stall torque could exceed recommended full load torques causing gearhead damage, especially in ratios of 60:1 and higher. Provisions to limit the torque are recommended.
- The torque values listed are the recommended full load torque values.
- Overhung load capacities shown are at center of output shaft.
- All PZ Series gearmotors are supplied with continuous duty "run" capacitor.
- Optional conduit box available, see page 238.
- For additional information, see Bulletin 1830.
- **Bodine®*/Bison®*/Dayton®* direct interchange.**

*Bison is believed to be the trademark or trade name of Bison Gear & Engineering Corporation and is not owned or controlled by Regal Beloit Corporation.

*Bodine is believed to be the trademark or trade name of Bodine Electric Corporation and is not owned or controlled by Regal Beloit Corporation.

*Dayton is a trademark or trade name of Dayton Electric Manufacturing Company and is not owned or controlled by Regal Beloit Corporation.

115 Volts - TEFC - Single Phase

Output RPM	F.L. Torque (Lb. In.)	Input HP	Catalogue Number	Availability	Model Number	Gear-motor Type & Frame	Ratio to 1	F.L. Amps 115	Over-hung Load (lb.)	Dimensions (inches)				Capacitor Mfd. 240 VAC	♥Notes
										P	X	XL	XH		
2	100	1/150	**M1125050.00**	√	CM31P17NZ1	PZ5-31	900	0.4	155	3.07	3.23	8.71	7.15	3	S, US, 12
9	100	1/15	**M1125127.00**	√	CM31P17FZ1	PZ4-31	180	0.9	155	3.88	3.23	10.42	8.86	10	S, US, 13
19	100	1/15	**M1125128.00**	√	CM31P17FZ2	PZ4-31	90	0.9	155	3.88	3.23	10.42	8.86	10	S, US, 13
28	100	1/15	**M1125129.00**	√	CM31P17FZ3	PZ3-31	60	0.9	155	3.88	2.43	9.62	8.06	10	S, US, 13
57	56	1/15	**M1125130.00**	√	CM31P17FZ4	PZ3-31	30	0.9	171	3.88	2.43	9.62	8.06	10	S, US, 13
94	36	1/15	**M1125131.00**	√	CM31P17FZ5	PZ3-31	18	0.9	171	3.88	2.43	9.62	8.06	10	S, US, 13
142	24	1/15	**M1125132.00**	√	CM31P17FZ6	PZ2-31	12	0.9	180	3.88	2.13	9.32	7.76	10	S, US, 13
283	12	1/15	**M1125133.00**	√	CM31P17FZ7	PZ2-31	6	0.9	180	3.88	2.13	9.32	7.76	10	S, US, 13

Note 12: TENV
Note 13: TEFC

♥ Note listing on inside back flap.
Specifications are subject to change without notice.

PZ SERIES - AC

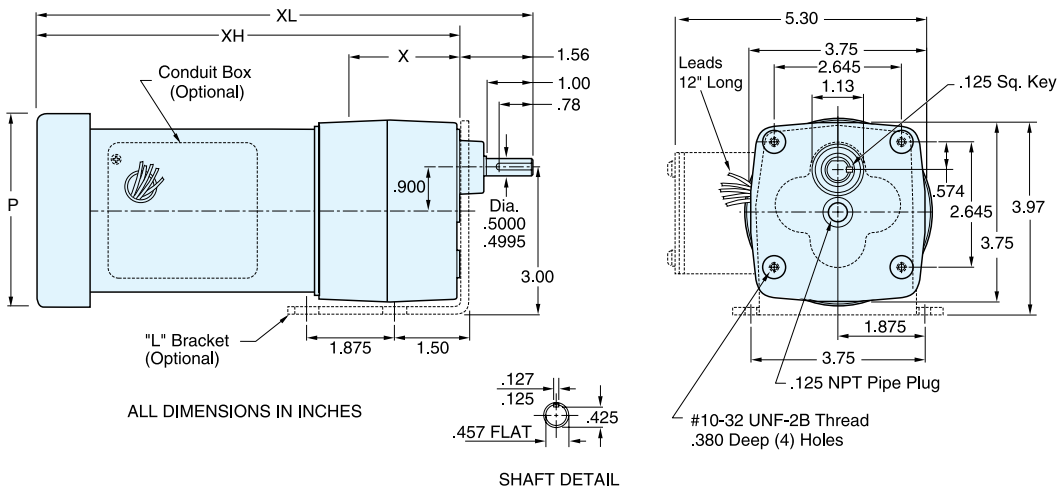

Gearmotors

P240 Series - SUB-FHP - AC Gearmotors

Output Torque - 43-391 In-Lbs.

Features:

- Permanent split capacitor design rated for 115/230 VAC 60/50 HZ input.
- Precision machined in-line steel gears.
- First stage steel helical gear followed by spur-type gears.
- Lubrication is permanent semi-fluid grease, reducing possibility of leakage.
- Output shafts have needle bearings for high load capacities.
- Shafts are hardened steel.
- Optional conduit box available, see page 238.

Application Notes:

- These gearmotors are designed for mounting at any angle, but motor below the reducer should be avoided to prevent leakage of lubricant into the motor should the motor shaft seal fail.
- The motor's stall torque could exceed recommended full load torques causing gearhead damage, especially in ratios of 60:1 and higher. Provisions to limit the torque are recommended.
- Overhung load capacities shown are at center of output shaft.
- All P240 Series gearmotors are supplied with continuous duty "run" capacitor.
- **Bison®*/Dayton®* direct interchange.**

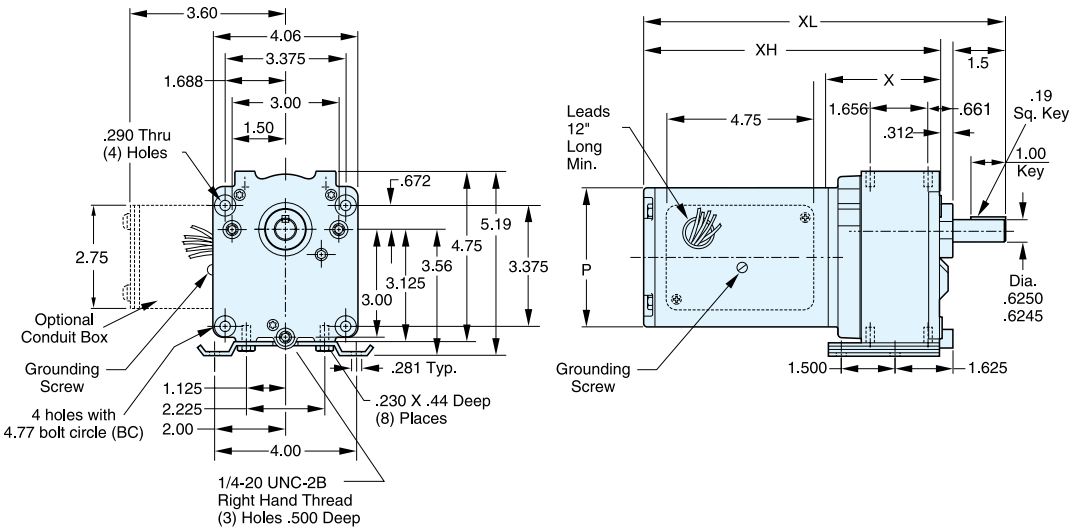

*Bison is believed to be the trademark or trade name of Bison Gear & Engineering Corporation and is not owned or controlled by Regal Beloit Corporation.

*Dayton is a trademark or trade name of Dayton Electric Manufacturing Company and is not owned or controlled by Regal Beloit Corporation.

Gearmotors

P240 Series - SUB-FHP - AC Gearmotors

Output Torque - 43-391 In-Lbs.

Single Phase - 115/230 Volts - Totally Enclosed - P240 Series

Output RPM	F.L. Torque (Lb. In.)	Input HP	Catalogue Number	Availability	Model Number	Gear-motor Type & Frame	Ratio to 1	F.L. Amps @115V	Over-hung Load (lb.)	Dimensions (inches) P	X	XL	XH	Capacitor Mfd. 240 VAC	♥Notes
8	345	1/15	**M1145029.00**	√	CM38P17NZ26	P243-38D	216	1.0	491	3.85	3.5	10.46	8.96	7.5	S, US, 12
15	250	1/15	**M1145023.00**	√	CM38P17NZ20	P243-38D	114	1.0	407	3.85	3.5	10.46	8.96	7.5	S, US, 12
30	135	1/15	**M1145024.00**	√	CM38P17NZ21	P242-38D	52	1.0	330	3.85	3.5	10.46	8.96	7.5	S, US, 12
45	92	1/15	**M1145025.00**	C/A	CM38P17NZ22	P242-38D	35	1.0	292	3.85	3.5	10.46	8.96	7.5	S, US, 12
70	61	1/15	**M1145026.00**	√	CM38P17NZ23	P242-38D	23	1.0	256	3.85	3.5	10.46	8.96	7.5	S, US, 12
97	43	1/15	**M1145027.00**	√	CM38P17NZ24	P242-38D	16.5	1.0	232	3.85	3.5	10.46	8.96	7.5	S, US, 12
139	30	1/15	**M1145028.00**	√	CM38P17NZ25	P242-38D	11.5	1.0	208	3.85	3.5	10.46	8.96	7.5	S, US, 12
16	391	1/6	**M1145030.00**	√	CM38P17FZ9	P243-38F	103	2.1	399	4.43	3.5	12.13	10.63	15	S, US, 13
30	295	1/6	**M1145031.00**	√	CM38P17FZ10	P243-38F	58	2.1	330	4.43	3.5	12.13	10.63	15	S, US, 13
40	219	1/6	**M1145032.00**	√	CM38P17FZ11	P243-38F	43	2.1	303	4.43	3.5	12.13	10.63	15	S, US, 13
60	157	1/6	**M1145033.00**	√	CM38P17FZ12	P242-38D	29	2.1	268	4.43	3.5	12.13	10.63	15	S, US, 13
90	103	1/6	**M1145034.00**	√	CM38P17FZ13	P242-38D	19	2.1	237	4.43	3.5	12.13	10.63	15	S, US, 13
156	60	1/6	**M1145035.00**	√	CM38P17FZ14	P242-38D	10.6	2.1	201	4.43	3.5	12.13	10.63	15	S, US, 13

C/A - Check Availability.
Note 12: TENV
Note 13: TEFC

♥ Note listing on inside back flap.
Specifications are subject to change without notice.

Gearmotors

P240 Series - SUB-FHP - AC Gearmotors

IP55 AC Washguard® Gearmotors

General Specifications - SCR Rated Gearmotors:

Single and three-phase washdown duty gearmotors rated for continuous duty applications. Permanent split designed single-phase motors include capacitor in conduit box. These gearmotors are designed for mounting at any angle, but motor below the reducer should be avoided to prevent leakage of lubricant into the motor should the motor shaft seal fail.

Features:

- Shaft material coated with Teflon®*/Ceramic plating
- White epoxy painted motors
- O-rings and gaskets used for sealing
- Hardened worm-type gearing used
- Interior components protected against corrosion
- Ball bearings used in gear housing
- Sealed output shafts
- Output shafts have needle bearings for high load capacities
- UL listed and CSA certified

115/230 Volts - 1 & 3-Phase - TEFC - P240 Series

Output RPM	F.L. Torque (Lb.In.)	Input HP	Catalogue Number	Availability	Model Number	Gearmotor Type & Frame	Ratio to 1	Voltage	F.L. Amps @230 V	Phase	Over-hung Load (Lbs.)	♥Notes
16	391	1/6	**M1145138.00**	√	CM38P17FZ39	P240	103	115/230	1.05	1	399	S, US
40	219	1/6	**M1145139.00**	√	CM38P17FZ40	P240	43	115/230	1.00	1	303	S, US
156	60	1/6	**M1145140.00**	√	CM38P17FZ41	P240	10.6	115/230	1.00	1	201	S, US
16	391	1/6	**M1145144.00**	√	CM38T17FZ20	P240	103	230	0.72	3	237	S, US
30	295	1/6	**M1145145.00**	√	CM38T17FZ21	P240	58	230	0.72	3	237	S, US

♥ Note listing on inside back flap.
Specifications are subject to change without notice.

*Teflon is believed to be a trademark or trade name of The Chemours Company and is not owned or controlled by Regal Beloit Corporation.

Gearmotors

PE350 Series - Parallel Shaft - AC Gearmotors

Output Torque - 25-341 In-Lbs

Features:

- All rated for 60/50 Hz operation except hi-torque single-phase which are 60 Hz only.
- Rugged die cast aluminum gear housing for maximum gear and bearing support.
- Precision machined gearing, hardened for maximum load capability.
- All gearing designed and rated to AGMA class 9 standards, and to withstand momentary shock overload of 200%.
- Oversized output bearings for greater overhung load capacity and long life.
- High carbon alloy output shaft provides maximum strength and rigidity.
- All needle bearing journals are precision ground after heat treating to provide maximum fit and finish.
- Heavy duty industrial oil seals keep lubricant in and dirt out.
- Gears and bearings are splash lubricated with permanent, heavy duty gear oil.
- Run capacitor supplied at no additional cost for single phase designs.
- Three phase and hi-torque single phase models include conduit box, other single phase models do not.
- These gearmotors are designed for mounting at any angle, but motor below the reducer should be avoided to prevent leakage of lubricant into the motor should the motor shaft seal fail.
- Overhung load capacities shown are at center of output shaft.
- **Bodine®*/Baldor®* direct interchange.**

PE350 SINGLE PHASE

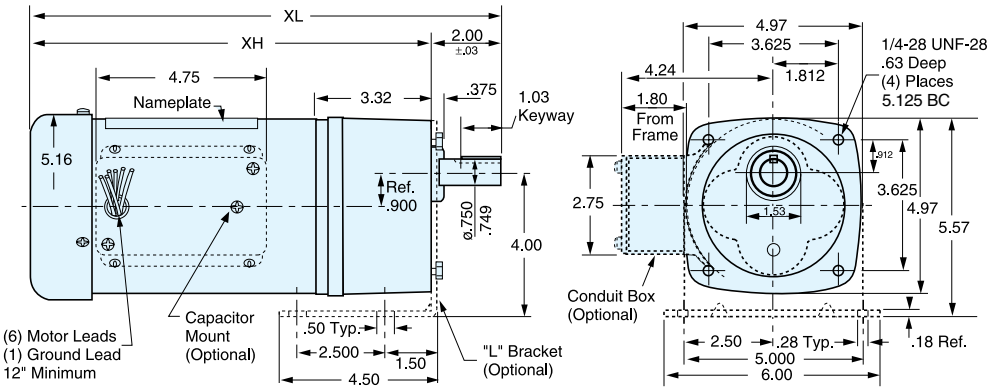

*Baldor is believed to be the trademark or trade name of ABB ASEA Brown Boveri Ltd. and is not owned or controlled by Regal Beloit Corporation.

*Bodine is believed to be the trademark or trade name of Bodine Electric Corporation and is not owned or controlled by Regal Beloit Corporation.

Output Torque - 25-341 In-Lbs

Single Phase - 115/230 Volts - Totally Enclosed - PE350 Series - Parallel Shaft

Output RPM	F.L. Torque (Lb.In.)	Input HP	Catalogue Number	Availability	Model Number	Gearmotor Type & Frame	Ratio to 1	F.L. Amps @115V	Over-hung Load (lb.)	Dimensions (inches) XL	Dimensions (inches) XH	Capacitor Mfd. 240 VAC	♥Notes
5	310	1/12	**096000.00**	√	C42P17NZ1	PE353-42	336	1.3	565	11.36	9.36	10	S, US, 12
9	341	1/12	**096001.00**	√	C42P17NZ2	PE353-42	180	1.3	491	11.36	9.36	10	S, US, 12
14	330	1/12	**096002.00**	√	C42P17NZ3	PE353-42	124	1.3	459	11.36	9.36	10	S, US, 12
19	250	1/12	**096003.00**	√	C42P17NZ4	PE353-42	91	1.3	374	11.36	9.36	10	S, US, 12
29	270	1/6	**096004.00**	√	C42P17FZ1	PE353-42	58	3.2	327	13.32	11.32	15	S, US, 13
34	250	1/6	**096005.00**	√	C42P17FZ2	PE353-42	50	3.2	330	13.32	11.32	15	S, US, 13
40	180	1/6	**096006.00**	C/A	C42P17FZ3	PE353-42	43	3.2	303	13.32	11.32	15	S, US, 13
59	135	1/6	**096007.00**	√	C42P17FZ4	PE352-42	29	3.2	267	13.32	11.32	15	S, US, 13
75	90	1/6	**096008.00**	√	C42P17FZ5	PE352-42	23	3.2	256	13.32	11.32	15	S, US, 13
113	68	1/6	**096009.00**	√	C42P17FZ6	PE352-42	15	3.2	222	13.32	11.32	15	S, US, 13
160	45	1/6	**096010.00**	C/A	C42P17FZ7	PE352-42	10	3.2	196	13.32	11.32	15	S, US, 13
340	25	1/6	**096011.00**	√	C42P17FZ8	PE352-42	5	3.2	190	13.32	11.32	15	S, US, 13
Hi-Torque Single Phase PE350 Gearmotors With Capacitor Start Motors													
58	320	1/3	**096049.00**	√	C42C17FZ4	PE353-42	30	7.2	300	14.56	12.56	---	S, US, 13
85	218	1/3	**096050.00**	√	C42C17FZ5	PE353-42	20	7.2	300	14.56	12.56	---	S, US, 13
173	109	1/3	**096051.00**	√	C42C17FZ6	PE353-42	10	7.2	300	14.56	12.56	---	S, US, 13
345	55	1/3	**096052.00**	C/A	C42C17FZ7	PE353-42	5	7.2	300	14.56	12.56	---	S, US, 13

♥ Note listing on inside back flap.
Specifications are subject to change without notice.

C/A - Check Availability.
Note 12: TENV
Note 13: TEFC

Three Phase - 230/460 Volts - PE350 Series - Parallel Shaft - TEFC

Output RPM	F.L. Torque (Lb.In.)	Input HP	Catalogue Number	Availability	Model Number	Gearmotor Type & Frame	Ratio to 1	F.L. Amps @230V	Over-hung Load (lb.)	Dimensions (inches) XL	Dimensions (inches) XH	♥Notes
58	320	1/3	**096013.00**	√	C42T17FZ14	PE353-42	30	1.6	300	13.81	11.81	S, US, 13
85	218	1/3	**096014.00**	√	C42T17FZ15	PE352-42	20	1.6	300	13.81	11.81	S, US, 13
173	109	1/3	**096015.00**	√	C42T17FZ16	PE352-42	10	1.6	300	13.81	11.81	S, US, 13
345	55	1/3	**096016.00**	√	C42T17FZ17	PE352-42	5	1.6	300	13.81	11.81	S, US, 13

♥ Note listing on inside back flap.
Specifications are subject to change without notice.

PE350 THREE PHASE

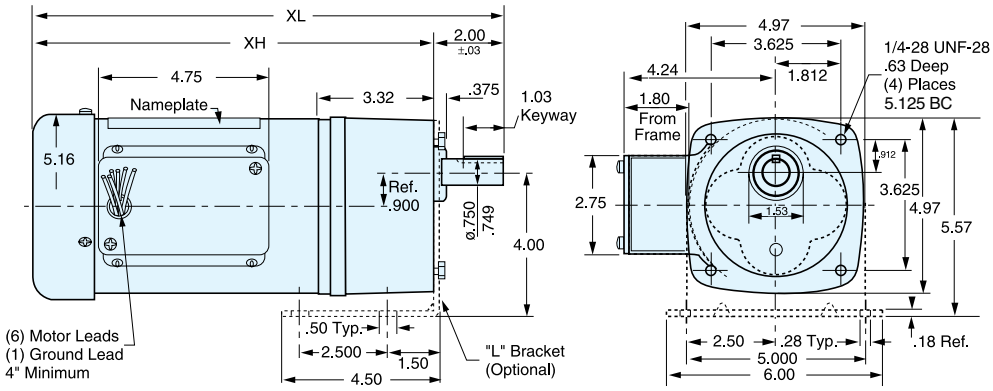

Gearmotors

P1100 Series - AC Gearmotors - Parallel Shaft

Output Torque - 70-1105 In-Lbs

Features:

- Capacitor start designs rated for 115/230 VAC 60 HZ input.
- Rugged die cast aluminum gear housing for maximum gear and bearing support.
- Precision machined gearing, hardened for maximum load capability.
- All gearing designed and rated to AGMA class 9 standards, and to withstand momentary shock overload of 200%.
- Oversized output bearings for greater overhung load capacity and long life.
- High carbon alloy output shaft provides maximum strength and rigidity.
- All needle bearing journals are precision ground after heat treating to provide maximum fit and finish.
- Heavy duty industrial oil seals keep lubricant in and dirt out.
- Gears and bearings are splash lubricated with permanent, heavy duty gear oil.
- Conduit box included as standard.

Application Notes:

- These gearmotors are designed for mounting at any angle, but motor below the reducer should be avoided to prevent leakage of lubricant into the motor should the motor shaft seal fail.
- Overhung load capacities shown are at center of output shaft.
- **Bison®*/Dayton®* direct interchange.**

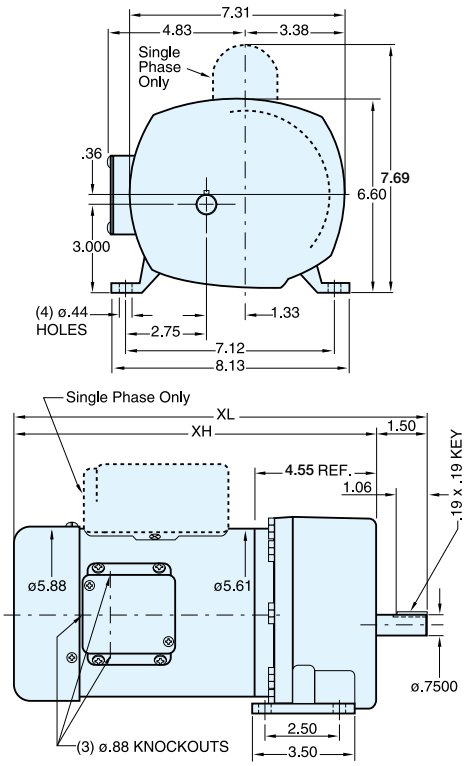

*Bison is believed to be the trademark or trade name of Bison Gear & Engineering Corporation and is not owned or controlled by Regal Beloit Corporation.

*Dayton is a trademark or trade name of Dayton Electric Manufacturing Company and is not owned or controlled by Regal Beloit Corporation.

Single Phase - 115/230 Volts - TEFC - P1100 Series

Output RPM	F.L. Torque (Lb.In.)	Input HP	Catalogue Number	Availability	Model Number	Gearmotor Type & Frame	Ratio to 1	F.L. Amps @115V	Overhung Load (lb.)	Dimensions (inches) XL	Dimensions (inches) XH	♥Notes
8	975	1/4	**107000.00**	√	C4C17FZ24	P1103-48	212	5.4	700	13.42	11.92	S, US
12	1030	1/4	**107004.00**	√	C4C17FZ28	P1103-48	143	5.4	700	13.42	11.92	S, US
18	800	1/4	**107003.00**	√	C4C17FZ27	P1103-48	95	5.4	700	13.42	11.92	S, US
26	569	1/4	**107002.00**	√	C4C17FZ26	P1103-48	66	5.4	650	13.42	11.92	S, US
59	248	1/4	**107005.00**	√	C4C17FZ29	P1102-48	29	5.4	625	13.42	11.92	S, US
133	114	1/4	**107001.00**	√	C4C17FZ25	P1102-48	13	5.4	525	13.42	11.92	S, US
18	1089	1/3	**107006.00**	√	C4C17FZ30	P1103-48	95	6.2	700	13.67	13.17	S, US
26	752	1/3	**107012.00**	√	C4C17FZ36	P1103-48	66	6.2	650	13.67	13.17	S, US
41	461	1/3	**107011.00**	√	C4C17FZ35	P1102-48	42	6.2	650	13.67	13.17	S, US
59	330	1/3	**107010.00**	√	C4C17FZ34	P1102-48	29	6.2	625	13.67	13.17	S, US
91	224	1/3	**107009.00**	√	C4C17FZ33	P1102-48	19	6.2	575	13.67	13.17	S, US
157	125	1/3	**107008.00**	√	C4C17FZ32	P1102-48	11	6.2	500	13.67	13.17	S, US
288	70	1/3	**107007.00**	√	C4C17FZ31	P1102-48	6	6.2	400	13.67	13.17	S, US
22	1105	1/2	**107013.00**	√	C4C17FZ37	P1103-48	79	8.8	700	14.17	12.67	S, US
41	700	1/2	**107017.00**	√	C4T17FZ41	P1102-48	42	8.8	650	14.17	12.67	S, US
59	496	1/2	**107016.00**	√	C4C17FZ40	P1102-48	29	8.8	625	14.17	12.67	S, US
91	336	1/2	**107015.00**	√	C4C17FZ39	P1102-48	19	8.8	575	14.17	12.67	S, US
133	229	1/2	**107014.00**	√	C4C17FZ38	P1102-48	13	8.8	525	14.17	12.67	S, US

♥ Note listing on inside back flap.
Specifications are subject to change without notice.

Three Phase - 230/460 Volts - TEFC - P1100 Series

Output RPM	F.L. Torque (Lb.In.)	Input HP	Catalogue Number	Availability	Model Number	Gearmotor Type & Frame	Ratio to 1	F.L. Amps @230V	Overhung Load (lb.)	Dimensions (inches) XL	Dimensions (inches) XH	♥Notes
18	1089	1/3	**107025.00**	√	C4T17FZ47	P1103-48	95	1.6	700	12.92	11.42	S, US
26	752	1/3	**107026.00**	√	C4T17FZ53	P1103-48	66	1.6	650	12.92	11.42	S, US
41	461	1/3	**107027.00**	√	C4T17FZ54	P1102-48	42	1.6	650	12.92	11.42	S, US
59	330	1/3	**107028.00**	√	C4T17FZ55	P1102-48	29	1.6	625	12.92	11.42	S, US
91	224	1/3	**107029.00**	√	C4T17FZ56	P1102-48	19	1.6	575	12.92	11.42	S, US
157	125	1/3	**107030.00**	√	C4T17FZ57	P1102-48	11	1.6	500	12.92	11.42	S, US
288	70	1/3	**107031.00**	√	C4T17FZ58	P1102-48	6	1.6	400	12.92	11.42	S, US
22	1105	1/2	**107032.00**	√	C4T17FZ48	P1103-48	79	2.0	700	13.42	11.92	S, US
41	700	1/2	**107033.00**	√	C4T17FZ49	P1102-48	42	2.0	650	13.42	11.92	S, US
59	496	1/2	**107034.00**	√	C4T17FZ50	P1102-48	29	2.0	625	13.42	11.92	S, US
91	336	1/2	**107035.00**	√	C4T17FZ51	P1102-48	19	2.0	575	13.42	11.92	S, US
133	229	1/2	**107036.00**	√	C4T17FZ52	P1102-48	13	2.0	500	13.42	11.92	S, US
288	100	1/2	**107037.00**	√	C4T17FZ46	P1102-48	6	2.0	400	13.42	11.92	S, US

♥ Note listing on inside back flap.
Specifications are subject to change without notice.

Gearmotors

Right-Angle - AC Gearmotors

Output Torque - 14-113 In-Lbs

Features:

- Permanent split capacitor design rated for 115/230VAC 60/50 HZ input.
- Worm-type right-angle gearing features hardened, steel worm shaft with bronze worm wheel for long life and quiet operation.
- Precision machined aluminum gear housing.
- Lubrication is permanent with an oil bath.
- Gearbox has all ball bearings.
- Output shaft is field interchangeable from left hand to right hand style by reassembly.
- Double output shaft available as a factory option.
- Optional conduit box available, see page 238.
- Optional gearbox base available (10 Series only), see page 238.

Application Notes:

- These right-angle gearmotors have a lubrication breather positioned for horizontal mounting. For other mountings, the breather plug must be reoriented by using a 90 deg 1/8" NPT taper pipe elbow. This elbow is not offered as a LEESON® motor accessory.
- These gearmotors are designed for mounting at any angle, but motor below the reducer should be avoided to prevent leakage of lubricant into the motor should the motor shaft seal fail.
- Overhung load capacities shown are at center of output shaft.
- Continuous duty run capacitor supplied as standard.
- **Bodine®*/Dayton®* direct interchange.**

Single Phase - 115/230 Volts - Totally Enclosed - Right-Angle

Output RPM	F.L. Torque (Lb. In.)	Input HP	Catalogue Number	Availability	Model Number	Gear-motor Type & Frame	Ratio to 1	F.L. Amps @115V	Over-hung Load (lb.)	Dimensions (inches)				Capacitor Mfd. 240 VAC	♥Notes
										P	X	XL	XH		
28	37	1/15	**M1125080.00**	√	CM31P17NZ19	10F60-31C	60	0.9	185	3.07	3.63	8.94	5.31	10.0¤	S, US, 12
43	34	1/15	**M1125081.00**	√	CM31P17NZ18	10F40-31C	40	0.9	185	3.07	3.63	8.94	5.31	10.0¤	S, US, 12
58	40	1/15	**M1125082.00**	√	CM31P17NZ17	10F30-31C	30	0.9	185	3.07	3.63	8.94	5.31	10.0¤	S, US, 12
85	24	1/15	**M1125083.00**	√	CM31P17NZ16	10F20-31C	20	0.9	185	3.07	3.63	8.94	5.31	10.0¤	S, US, 12
173	14	1/15	**M1125084.00**	√	CM31P17NZ15	10F10-31C	10	0.9	185	3.07	3.63	8.94	5.31	10.0¤	S, US, 12
29	110	1/6	**M1145037.00**	√	CM38P17FZ16	13F60-38F	60	2.0	235	3.85	4.5	12.31	7.81	15.0¢	S, US, 13
43	113	1/6	**M1145038.00**	√	CM38P17FZ17	13F40-38F	40	2.0	235	3.85	4.5	12.31	7.81	15.0¢	S, US, 13
57	95	1/6	**M1145082.00**	C/A	CM38P17FZ23	13F30-38F	30	2.0	235	3.85	4.5	12.31	7.81	15.0¢	S, US, 13
83	75	1/6	**M1145039.00**	√	CM38P17FZ18	13F20-38F	20	2.0	235	3.85	4.5	12.31	7.81	15.0¢	S, US, 13
170	43	1/6	**M1145040.00**	√	CM38P17FZ19	13F10-38F	10	2.0	235	3.85	4.5	12.31	7.81	15.0¢	S, US, 13
340	23	1/6	**M1145041.00**	√	CM38P17FZ20	13F05-38F	5	2.0	235	3.85	4.5	12.31	7.81	15.0¢	S, US, 13

¤ 250 VAC
¢ 300 VAC
C/A - Check Availability.
Note 12: TENV
Note 13: TEFC

♥ Note listing on inside back flap.
Specifications are subject to change without notice.

*Bodine is believed to be the trademark or trade name of Bodine Electric Corporation and is not owned or controlled by Regal Beloit Corporation.

*Dayton is a trademark or trade name of Dayton Electric Manufacturing Company and is not owned or controlled by Regal Beloit Corporation.

Gearmotors

IP55 AC Washguard® Gearmotors

Right-Angle - Single & Three Phase

General Specifications:

Single and three-phase washdown duty gearmotors rated for continuous duty applications. Permanent split designed single-phase motors include capacitor in conduit box. Motors are designed for extended life in applications requiring regular washdown or otherwise wet environments. Avoid shaft up applications, with motor below, to prevent leakage of lubricant into the motor should shaft seal fail.

Features:

- Shaft material is coated with Teflon®*/Ceramic plating
- White epoxy painted motors
- O-rings and gaskets used for sealing
- Hardened worm-type gearing used
- Interior components protected against corrosion
- Ball bearings used in gear housing
- Sealed output shafts
- Output shafts have needle bearings for high load capacities
- UL listed and CSA certified

Single & Three Phase - TEFC - Right-Angle

Output RPM	F.L. Torque (Lb.In.)	Input HP	Catalogue Number	Availability	Model Number	Ratio to 1	Voltage	F.L. Amps @ 230V	Phase	Over-hung Load (Lbs)
43	113	1/6	**M1145141.00**	√	CM38P17FZ42	40	115/230	1.0	1	235
83	75	1/6	**M1145142.00**	√	CM38P17FZ43	20	115/230	1.0	1	235
340	23	1/6	**M1145143.00**	√	CM38P17FZ44	5	115/230	1.0	1	235
230 Volts Three Phase										
29	220	3/8	**M1145146.00**	√	CM38T17FZ22	60	230	1.3	3	235
172	105	3/8	**M1145147.00**	√	CM38T17FZ23	10	230	1.3	3	235

Specifications are subject to change without notice.

*Teflon is believed to be the trademark or trade name of The Chemours Company and is not owned or controlled by Regal Beloit Corporation.

Gearmotors

SUB-FHP Accessories

Sub-FHP Gearmotor Conduit Boxes

Optional steel conduit or junction boxes are available. The boxes are painted and mount in holes using screws provided with all stock gearmotors.

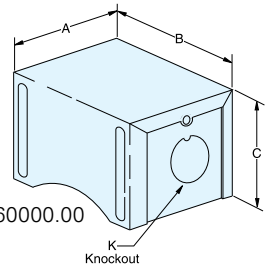

M1760000.00

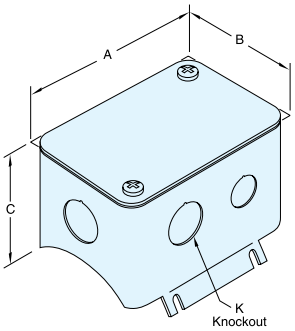

M1760012.00
&
175893.00

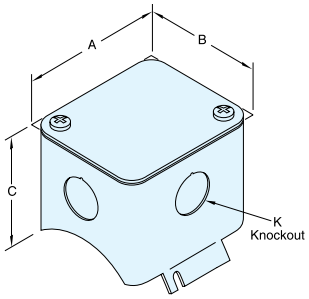

M1760007.00
&
M1760021.00

Catalogue Number	Frame	Dimensions (inches)			
		A	B	C	K
M1760000.00*	25	2.09	2.45	2.23	0.88
M1760021.00*	30/31	3.13	2.63	2.28	0.88
M1760007.00	34	3.13	2.63	2.28	0.875
M1760012.00	38	4.75	2.75	2	1.13
175893.00	42	4.75	2.75	2	1.13

*For any gearmotor catalog number beginning with M1115XXX, must clarify from gearmotor type and frame columns as listed on the respective pages for that gearmotor type. For example, if gearmotor type and frame lists P303-30E, then use the 30 frame conduit box kit M1760021.00. If gearmotor type and frame lists 10F60-25, then use conduit box kit M1760000.00.

Specifications are subject to change without notice.

Sub-FHP Gearmotor "L" Mounting Bracket

Optional "L" brackets can be used to mount parallel shaft type PZ or PE350 gearmotors of steel construction. They are painted and include screws for mounting to the motor, but not the application.

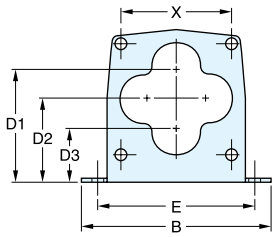

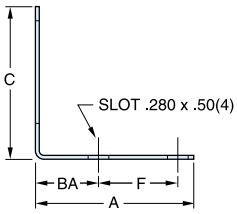

Catalogue Number	Frame	Dimensions (inches)									
		A	B	C	1D1	1D2	1D3	X	BA	F	E
M1760003.00*	PZ Gearmotors	3.75	4.5	3.94	3	2.3	1.5	2.6	1.5	1.88	3.75
M1760011.00**	PE350 Gearmotors	4.50	6	5.52	4	3.1	2.2	3.6	1.5	2.50	5.00
M1760029.00Δ	PE350 Gearmotors	4.50	6	5.52	4	3.1	2.2	3.6	1.5	2.50	5.00

*Maximum radial load no greater than 50 lbs. This bracket can also be used on DC motors in the 34 frame having the style C mounting.

**Maximum radial load no greater than 200 lbs.

Δ Washguard® PE350 L-Bracket.

Specifications are subject to change without notice.

Sub-FHP Gearmotor Right-Angle Base Kit

This optional base kit can be used with the 10 Series right-angle gearmotors. (Includes screws for mounting to gearbox, but not the application.)

Catalogue Number
M1760006.00

Specifications are subject to change without notice.

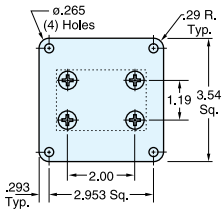

For SUB-FHP Right-Angle AC Gearmotors

MFD Rating	Voltage Rating	Catalogue Number	Dimensions (inches)			
			W	H	T	D
10	250	**003043.05**	1.53	1.27	0.86	1.35
15	300	**003042.05**	2.28	1.61	1.14	1.88

For SUB-FHP P240 & PE350 AC Gearmotors

Gearmotor Type	MFD Rating	Voltage Rating	Catalogue Number	Dimensions (inches)			
				W	H	T	D
P240	7.5	250	**003042.02**	2.11	1.26	1.76	1.88
PE350	10	250	**003042.06**	1.46	1.14	0.75	1.76
P240	15	300	**003042.05**	2.28	1.61	1.14	2.48
PE350	15	250	**003042.04**	2.11	1.26	0.88	1.74

For SUB-FHP AC PZ Series Gearmotors

MFD Rating	Voltage Rating	Catalogue Number	Dimensions (inches)			
			W	H	T	D
3	250	**003043.01**	1.44	0.93	0.49	0.97
10	250	**003043.05**	1.53	1.27	0.86	1.35

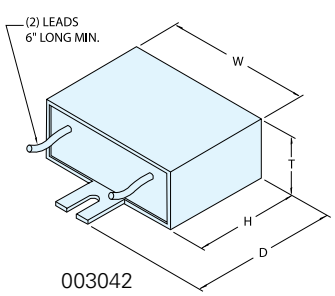

003042

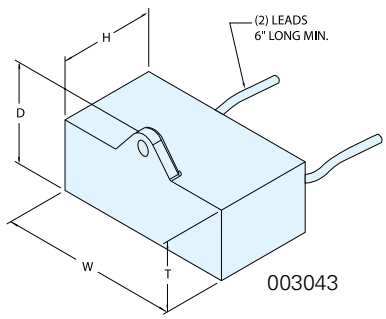

003043

Gearmotors

Inverter Rated - PZ Series - AC Gearmotors

Features:

- Designed with the exclusive IRIS® inverter rated insulation system
- Provides superior protection against voltage spikes induced by variable frequency drives
- Double shielded motor ball bearings
- Needle bearings in the parallel shaft gearboxes
- Ball bearings in the right angle (worm) gearboxes
- Steel conduit box provided as standard
- Finished in high gloss hardened black enamel paint

Application Notes:

- Designed with high temperature insulation (Class F) to prevent overheating when operated with a PWM inverter down to a 10:1 speed range from the printed gearmotor RPM
- These gearmotors are designed for mounting at any angle, but motor below the reducer should be avoided to prevent leakage of lubricant into the motor should the motor shaft seal fail
- Overhung load capacities shown are at center of output shaft

pz SERIES – AZ

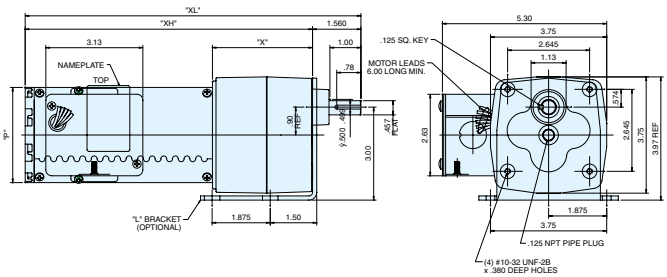

Three Phase - 230 Volts - TENV - PZ Series

Output RPM	F.L. Torque (Lb. In.)	Input HP	Catalogue Number	Availability	Model Number	Gear-motor Type & Frame	Ratio to 1	F.L. Amps @230V	Over-hung Load (lb.)	Dimensions (inches) P	X	XL	XH	♥Notes
19	100	1/15	**M1125282.00**	C/A	CM31T17NZ26	PZ4-31	90	0.4	155	3.07	3.23	10.83	9.27	S, US
57	56	1/15	**M1125283.00**	√	CM31T17NZ27	PZ3-31	30	0.4	155	3.07	2.43	10.03	8.47	S, US
142	24	1/15	**M1125284.00**	√	CM31T17NZ28	PZ2-31	12	0.4	155	3.07	2.13	9.73	8.17	S, US
283	12	1/15	**M1125285.00**	√	CM31T17NZ29	PZ2-31	6	0.4	155	3.07	2.13	9.73	8.17	S, US

C/A - Check Availability.

♥ Note listing on inside back flap.
Specifications are subject to change without notice.

P240 SERIES – AC

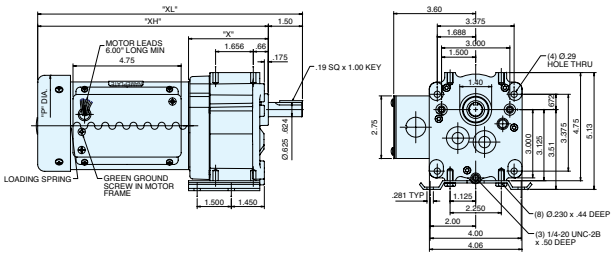

Three Phase - 230 Volts - TEFC - P240 Series

Output RPM	F.L. Torque (Lb. In.)	Input HP	Catalogue Number	Availability	Model Number	Gear-motor Type & Frame	Ratio to 1	F.L. Amps @230V	Over-hung Load (lb.)	Dimensions (inches) P	X	XL	XH	♥Notes
16	391	1/6	**M1145122.00**	√	CM38T17FZ12	P243-38	103	0.7	237	4.43	3.5	11.63	10.13	S, US
30	295	1/6	**M1145123.00**	√	CM38T17FZ14	P243-38	58	0.7	237	4.43	3.5	11.63	10.13	S, US
60	157	1/6	**M1145124.00**	√	CM38T17FZ15	P242-38	29	0.7	237	4.43	3.5	11.63	10.13	S, US
90	103	1/6	**M1145125.00**	√	CM38T17FZ16	P242-38	19	0.7	237	4.43	3.5	11.63	10.13	S, US
156	60	1/6	**M1145126.00**	√	CM38T17FZ17	P242-38	11.0	0.7	237	4.43	3.5	11.63	10.13	S, US

♥ Note listing on inside back flap.
Specifications are subject to change without notice.

PE350 THREE PHASE

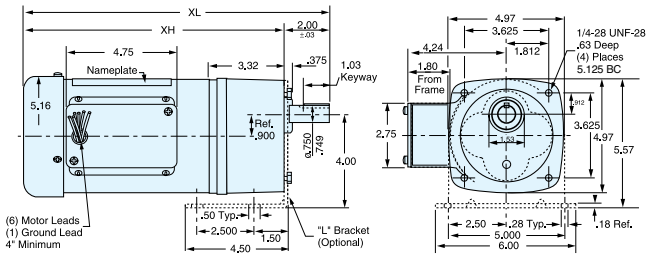

Three Phase - 230-460 Volts - TEFC - PE350 Series

Output RPM	F.L. Torque (Lb. In.)	Input HP	Catalogue Number	Availability	Model Number	Gear-motor Type & Frame	Ratio to 1	F.L. Amps @230V	Over-hung Load (lb.)	Dimensions (inches)				♥Notes
										P	X	XL	XH	
9	341	1/6	**096065.00**	√	C42T17FZ34	PE353-42	180	1.0	327	5.16	3.32	12.57	10.57	S, US
29	300	1/4	**096066.00**	√	C42T17FZ29	PE353-42	58	1.2	327	5.16	3.32	13.07	11.07	S, US
58	244	1/4	**096067.00**	√	C42T17FZ30	PE353-42	30	1.2	327	5.16	3.32	13.07	11.07	S, US
85	165	1/4	**096068.00**	√	C42T17FZ31	PE352-42	20	1.2	327	5.16	3.32	13.07	11.07	S, US
173	92	1/4	**096069.00**	√	C42T17FZ32	PE352-42	10	1.2	327	5.16	3.32	13.07	11.07	S, US
345	50	1/4	**096070.00**	√	C42T17FZ33	PE352-42	5	1.2	327	5.16	3.32	13.07	11.07	S, US

♥ Note listing on inside back flap.
Specifications are subject to change without notice.

13 SERIES – AC

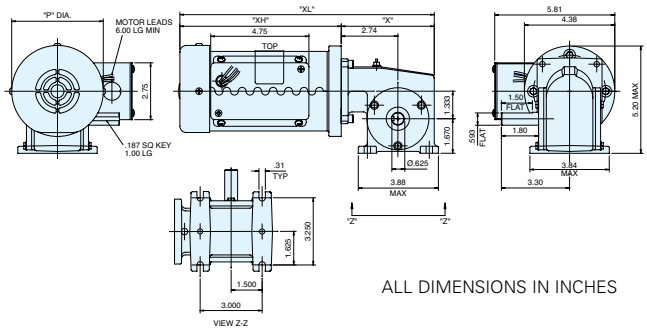

ALL DIMENSIONS IN INCHES

Three Phase - 230 Volts - TEFC - Right-Angle Series

Output RPM	F.L. Torque (Lb. In.)	Input HP	Catalogue Number	Availability	Model Number	Gear-motor Type & Frame	Ratio to 1	F.L. Amps @230V	Over-hung Load (lb.)	Dimensions (inches)				♥Notes
										P	X	XL	XH	
29	220	3/8	**M1145127.00**	√	CM38T17FZ7	13F60-38	60	1.3	235	4.43	4.5	12.31	7.81	S, US
43	228	3/8	**M1145128.00**	√	CM38T17FZ8	13F40-38	40	1.3	235	4.43	4.5	12.31	7.81	S, US
86	138	3/8	**M1145129.00**	√	CM38T17FZ9	13F20-38	20	1.3	235	4.43	4.5	12.31	7.81	S, US
172	105	3/8	**M1145130.00**	√	CM38T17FZ10	13F10-38	10	1.3	235	4.43	4.5	12.31	7.81	S, US
345	54	3/8	**M1145131.00**	√	CM38T17FZ11	13F05-38	5	1.3	235	4.43	4.5	12.31	7.81	S, US

♥ Note listing on inside back flap.
Specifications are subject to change without notice.

AC / DC Controls

Quick Reference

DC Adjustable Speed Drives

Speedmaster® DC drives for use with SCR rated motors. Models range from sub-FHP through 3 HP. NEMA® 1, NEMA 4/12 and NEMA 4X enclosures available. Low voltage controls available through 120 amps @12/24 volts and 100 amps @ 36/48 volts.

SM2/SM4 Series Flux Vector Sub-Micro AC Inverters

Speedmaster sensorless vector drives with "big drive" features and ultra-compact size. SM2 - 1/2 through 25 HP. IP31 enclosure — NEMA 1 Type. SM4 - 1/2 through 10 HP IP65 NEMA 4.

SM Series Sub-Micro AC Inverters

Speedmaster adjustable speed drives for simpler applications not requiring the advanced features of the SM-Plus Series. Models range from 1/3 through 25 HP. IP20 enclosure — chassis mount.

Micro Series NEMA Enclosed AC Inverters

Speedmaster adjustable speed drives with plain-English programming and read-out. Models range from 1/4 through 150 HP. NEMA 1 enclosure.

Micro Series Washguard® AC Inverters

Speedmaster adjustable speed drives in NEMA 4/12 and NEMA 4X enclosures. Plain-English programming and read-out. Models range from 1/4 through 125 HP.

VSD Series AC Inverters

VSD Series Drives are for use with an AC induction motor or a PMAC motor. IP20 enclosure protection. 1/3 HP through 30 HP.

NEW!

NEMA is a trademark of National Electrical Manufacturers Association and is not owned or controlled by Regal Beloit Corporation.

LEESON®

LEESON® Speedmaster® inverters are feature rich controls offering great process control and operating efficiency for your AC Motors. With our broad family of controls, we have the solution for your application needs at a competitive price.

Basic Features	Micro Series	SM-Plus	SM-Basic	SM2 Vector	SM4 Vector	Platinum VSD	VSD - Plus
Enclosure Type	IP31 & IP65/54	IP20	IP20	IP31	IP65	IP21	IP21
Enclosure Material	Steel	Plastic	Plastic	Plastic	Plastic	Plastic	Plastic
Number Pre-set Speeds	4	7	7	8	8	16	16
Washdown Duty	Yes	No	No	No	Yes	No	No
FWD & REV	Yes	Yes	Yes	Yes	Yes	Yes	Yes
Password Protected	Yes	Yes	Yes	Yes	Yes	Yes	Yes
Dynamic Brake Kits	Yes	Yes	Yes	Yes	Yes	No	Yes
Relays	Yes	Yes	Yes	Yes	Yes	Yes	Yes
EPM Programmable	No	Yes	Yes	Yes	Yes	Yes	Yes
Open Loop Vector	No	No	No	Yes	Yes	Yes	Yes
Closed Loop Vector	No	No	No	No	No	No	Yes
PMAC Motor Control	No	No	No	No	No	Yes	Yes
PID Software	Yes	No	No	Yes	Yes	Yes	No
Remote Keypads	Yes	Yes	Yes	Yes	Yes	Yes	Yes
Slip Compensation	Yes	Yes	Yes	Yes	Yes	Yes	Yes
Speed Reference Signals	Yes	Yes	Yes	Yes	Yes	Yes	Yes
Display - Words or Codes	Words	3- digit	3 - digit	4 - digit	4 - digit	Words & Codes	Words & Codes
Adjustable Carrier Frequency	2.5 - 14 kHz	4 - 10 kHz	4 - 10 kHz	4 - 10 kHz	4 - 10 kHz	2 - 16 kHz	2 - 16 kHz
DC Braking	Yes	Yes	Yes	Yes	Yes	Yes	Yes
Fault History	Yes	Yes	Yes	Yes	Yes	Yes	Yes
Max. HP @ 575 Volts	60	25	—	60	10	—	—
Max. HP @ 460 Volts	150	30	15	60	30	3	30
Max. HP @ 230 Volts	60	20	15	20	20	3	3
1 Phase Input / 3 Phase Output	Yes	Yes	Yes	Yes	Yes	Yes	Yes
Output Frequency	120 Hz	240 Hz	240 Hz	500 Hz	500 Hz	599 Hz	599 Hz

AC / DC Controls

DC Adjustable Speed Drives
SCR Thyristor Controls

LEESON® Speedmaster® DC Control Information

PWM and SCR Controls

General Specifications:

- General purpose for permanent magnet DC motors
- NEMA® 4X and 4/12 suitable for washdown applications
- Dual voltage capable on most designs – see HP range
- 115 / 230 volt single-phase input voltage – DC 90 volt or 180 volt output
- Adjustable minimum and maximum speed
- Speed pot included on chassis controls
- Adjustable IR compensation
- Heat sinks required as noted
- PWM controls provide quieter operation, lower motor temperature and greater motor overload capacity

Regenerative Controls

General Specifications:

- Four quadrant controls for precise motion control
- NEMA 4X or chassis style
- Motoring and braking torque regulation ¼ HP through 2 HP

For NEMA Frame Motors & Gearmotors
SCR Controls - Enclosed - Single Phase Input 50/60 Hz

Description	Catalogue Number	Output Amps	HP Range 115V	HP Range 230V	App. Wgt. (lbs.)
NEMA 1 General Purpose					
— Non-Reversing	**MM23112D**	1.5	1/20 to 1/8	1/10 to 1/4	5
— Non-Reversing	**MM23102D**	10	1/8 to 1 Δ	1/4 to 2 Δ	5
— Reversing with Dynamic Braking	**MM23212D**	1.5	1/20 to 1/8	1/10 to 1/4	5
— Reversing with Dynamic Braking	**MM23202D**	10	1/8 to 1 Δ	1/4 to 2 Δ	5
— Heat Sink Δ	**HSK-0002**	—	—	—	1
NEMA 4X Washdown—Dust-Tight					
— Non-Reversing Plastic Enclosure	**174102.00**	10	1/8 to 1	1/4 to 2	6
— Non-Reversing	**MM23412D**	1.5	1/20 to 1/8	1/10 to 1/4	7
— Non-Reversing	**MM23402D**	10	1/8 to 1	1/4 to 2	7
— Reversing, Plastic Enclosure*	**174107.00**	10	1/8 to 1	1/4 to 2	7
NEMA 4					
— Non-Reversing 3HP	**174709.00**	15	1.5	3	8

Δ Heat Sink #HSK-0002 required above 5 amps.
* Drive does not have dynamic braking. Motor shaft must be at zero speed before reversing.
Specifications are subject to change without notice.

NEMA is a trademark of National Electrical Manufacturers Association and is not owned or controlled by Regal Beloit Corporation.

LEESON® Speedmaster® DC Control Information

SCR Controls - Open Chassis

Description	Catalogue Number	Output Amps	HP Range 115V	HP Range 230V	App. Wgt. (lbs.)
Chassis with Speed Pot-Non Reversing	**MM23012D**	1.5	1/10 to 1/8	1/10 to 1/4	1
Chassis with Speed Pot-Non Reversing	**MM23002D**	10	1/8 to 1 ◘	1/4 to 2 ◘	1
Chassis with Speed Pot-Non Reversing	**LGC400-10***	10	1/8 to 1 ◘	1/4 to 2 ◘	1
Chassis Heat Sink ◘	**HSK-0001**	—	—	—	1

*Has field supply for shunt wound motors.
Specifications are subject to change without notice.

Regenerative SCR Drives - Four Quadrant - Full Wave

Description	Catalogue Number	Output Amps	HP Range 115V	HP Range 230V	App. Wgt. (lbs.)
NEMA® 4X Washdown ♠	**RG500A**	10	1/4 to 1 ▼	1/2 to 2 ▼	8
Open Chassis with Speed Pot ♠	**RGA400-10**	10	1/4 to 1▼	1/2 to 2 ▼	2
Chassis Heat Sink ▼	**HSK-0004**	—	—	—	2

Specifications are subject to change without notice.

For Subfractional HP Motors & Gearmotors
PWM Controls - Enclosed - Single Phase Input 50/60 Hz

Description	Catalogue Number	Output Amps	HP Range 115V	HP Range 230V	App. Wgt. (lbs.)
— PWM Non-Reversing	**M1740008.00**	3	1/40 to 1/8	1/40 to 1/4	2

◘ Chassis Heat Sink #HSK-0001 required for 3/4 and 1HP 115V and 1-1/2 and 2HP 230V when the amp draw of the motor exceeds 5 amps.
▼ Chassis Heat sink #HSK-0004 required for 1HP and above when the amp draw of the motor exceeds 5 amps.
♠ Regenerative drives are reversible and have regenerative braking.

Specifications are subject to change without notice.

NEMA is a trademark of National Electrical Manufacturers Association and is not owned or controlled by Regal Beloit Corporation.

AC / DC Controls

DC Adjustable Speed Drives - SCR Controls

15 Series

General Specifications:

- 0-90 / 0-180 volts DC
- Adjustable min. and max. speed
- Adjustable IR compensation
- Fixed acceleration - 5 seconds
- 5K ohm speed potentiometer included
- 25:1 speed range and 1% speed regulation

NEMA 4/12
Non-Reversing

Figure 1

Figure 2

Description	Catalogue Number	Output Amps	HP Range		App. Wgt. (lbs.)
			115V	230V	
NEMA® 4/12 Non-Reversing	**174696.00**	3	1/3	2/3	5
Chassis - Figure 1	**174695.00**	2	1/6	1/6	1
Chassis - Figure 2	**174694.00**	2	1/6	1/6	1

Specifications are subject to change without notice.

Low Voltage Adjustable Speed Controllers

General Specifications:

- Chassis type design
- DC input / DC output
- Speed potentiometer shipped loose
- High efficiency designs increase battery life

Features:

- 40:1 speed range
- Holds speed control as battery discharges
- Adjustable min. and max. speeds
- IR compensation
- 200% current limit overload protection
- Inhibit pins provide optional start-stop
- Power on LED indicator

For NEMA Frame Motors & Gearmotors
SCR Controls - Enclosed - Single Phase Input 50/60 Hz

Input Voltage	Catalogue Number	Output Amps	Dimensions (inches)			App. Wgt. (lbs.)
			Length	Width	Height	
12/24	**175290.00**	16	6.90	4.44	2.19	2
12/24	**175291.00**	60	7.78	6.90	3.25	4
36/48	**175292.00**	60	7.78	6.90	3.25	4

Specifications are subject to change without notice.

NEMA is a trademark of National Electrical Manufacturers Association and is not owned or controlled by Regal Beloit Corporation.

LEESON®

General Specifications:

- Chassis type design
- DC input / DC output
- Speed potentiometer shipped loose
- High efficient designs increase battery life
- On board trim pots for calibration, speed and forward and reverse settings

Features:

- Sleep mode feature
- Accepts switch closure for reversing and braking
- Built-in short circuit protection
- 1.01 Form factor
- Built-in temperature sensor
- On board trim pots for calibration, speed and forward and reverse settings

Four Quadrant Control

Input Voltage	Catalogue Number	Output Amps	Dimensions (inches)			App. Wgt. (lbs.)
			Length	Width	Height	
12/24	**174298.00**	120	6.90	5.00	2.50	3
36/48	**174299.00**	100	6.90	5.00	2.50	3

Specifications are subject to change without notice.

Dual Mode - Dual Speed Controllers

- SCR control designed to run two DC motors at the same time in either independent mode or slave/ master mode
- Open chassis design
- Dual voltage, 115-230 VAC input with jumper
- Selectable 90/180 VDC output
- Jumper selectable speed and torque mode
- Two trim pots each for the minimum speed, maximum speed, IR compensation, current limit and acceleration/deceleration
- Comes standard with two potentiometers

HP	Output Amps	Output Voltage	Catalogue Number	App. Wgt. (lbs)
1 HP @ 90 VDC	10*	0-90/0-180	**MTU100-11.5**	3

* Heat sink HSK-0001 is required if one side provides more than 5A or the output on both sides is more than 6.5A.
Specifications are subject to change without notice.

Control Accessories

Description	Catalogue Number
Inhibit Plug	**KTW-0002**
Speed Pot (10k/5w pot, washers & nut)	**KTP-0001**
Legend Plate	**KTP-0023**
Knob	**KTP-0010**

Specifications are subject to change without notice.

Foot Switch/Potentiometer

The Varior™* foot-operated potentiometer. It is built for variable speed applications where the operator is working in a hands-free mode. It is CSA approved and features a 10K pot.

Description	Catalogue Number
Foot Operated Speed Pot	**174650.00**

Process Control Module - PCM 4

The PCM4 card is a compact and cost-effective solution for process control applications.

Specifications	Catalogue Number PCM4
Input Voltage (AC/1ph)	115 Or 230V
Output Voltage Max. (DC)	±10V
Output Current Max. (DC)	10mA
Weight (lbs.)	0.75

*Varior is believed to be the trademark or trade name of Linemaster Switch Corp. and is not owned or controlled by Regal Beloit Corporation.

AC / DC Controls

Micro Series AC Inverters

NEMA® 1, IP31 Enclosure Protection

NEMA® 1

Features:

- Full feature, English read-out parameters
- 16 bit Intel®* microprocessor
- Choice of using factory "Quick Start" program settings
- Output frequency to 120 Hz. Higher frequency available
- 150% overload capacity for one minute
- Speed reference signals - potentiometer, 0-10 VDC or 4-20mA inputs
- Output signal, 0-10 VDC, speed or load
- Two auxiliary contacts, one form C relay and two open collector outputs
- 4 preset speeds
- Slip compensation
- Adjustable carrier frequency
- Adjustable acceleration and deceleration times
- Forward and reverse
- Time and voltage adjustable DC braking
- Password protected
- Constant torque with adjustable current limit
- Steel enclosure with aluminum heat sinks
- Dynamic braking kits available
- Remote keypads available
- PID software built-in for motor feedback
- UL Listed

PDF file of manual available at
www.regalbeloit.com/Brands/LEESON/Technical-Information

NEMA 1 (IP31) - Single Phase Input / 230 Volts Three Phase Output

(Use with three phase 230 Volts motor)

HP	Output Amps @ 230 Volts	Input Voltage	Catalogue Number	App. Wgt. (lbs)	Dimension Key
1/4	1.4	115/230	**174930.00**	5	A
1/2	2.2	115/230	**174997.00**	7	AC
1	4.0	115/230	**174931.00**	7	D
1 1/2	5.2	115/230	**174932.00**	7	D
2	6.8	200-230	**174933.00**	9	E
3	9.6	200-230	**174934.00**	9	E

Specifications are subject to change without notice.
Dimension Table see page 268-269.

*Intel is a trademark or trade name of Intel Corporation and is not owned or controlled by Regal Beloit Corporation.
NEMA is a trademark of National Electrical Manufacturers Association and is not owned or controlled by Regal Beloit Corporation.

NEMA® 1, IP31 Enclosure Protection

Three Phase Input / Output

Voltage	HP	Output Amps	Input Voltage	Catalogue Number	App. Wgt. (lbs)	Dimension Key
200-240 Volts	1/2	2.2	200-240	**174914.00**	6	B
	1	4.0	200-240	**174915.00**	6	C
	1 1/2	5.2	200-240	**174916.00**	6	C
	2	6.8	200-240	**174917.00**	9	E
	3	9.6	200-240	**174918.00**	9	E
	5	15.2	200-240	**174919.00**	11	F
	10	28.0	200-240	**174551.00**	19	L
	15	42.0	200-240	**174557.00**	19	N
	20	54.0	200-240	**174560.00**	31	P
	25	68.0	200-240	**174569.00**	38	T
	30	80.0	200-240	**174571.00**	44	T
400-480 Volts	1	2.0	400-480	**174920.00**	6	B
	2	3.4	400-480	**174921.00**	7	D
	3	4.8	400-480	**174922.00**	9	E
	5	7.6	400-480	**174923.00**	9	E
	10	14.0	400-480	**174552.00**	15	M
	15	21.0	400-480	**174558.00**	19	L
	20	27.0	400-480	**174561.00**	20	N
	25	34.0	400-480	**174563.00**	31	P
	30	40.0	400-480	**174565.00**	31	P
	40	52.0	400-480	**174567.00**	39	T
	50	65.0	400-480	**174593.00**	44	W
	60	77.0	400-480	**174572.00**	67	W
	75	96.0	400-480	**174580.00**	185	AG
	100	124.0	400-480	**174582.00**	250	AH
	125	156.0	400-480	**174584.00**	260	AH
	150	180.0	400-480	**174586.00**	360	AL
480-590 Volts	1	1.6	480-590	**174925.00**	6	B
	2	2.7	480-590	**174926.00**	7	D
	3	3.9	480-590	**174927.00**	9	E
	5	6.1	480-590	**174928.00**	9	F
	7 1/2	9.0	480-590	**174929.00**	11	I
	10	11.0	480-590	**174553.00**	13	R
	15	17.0	480-590	**174559.00**	19	N
	20	22.0	480-590	**174562.00**	19	O
	25	27.0	480-590	**174564.00**	21	P
	30	32.0	480-590	**174566.00**	31	S
	40	41.0	480-590	**174599.00**	38	T
	50	52.0	480-590	**174594.00**	45	W
	60	62.0	480-590	**174573.00**	51	W

Specifications are subject to change without notice.
Dimension Table see page 268-269

NEMA is a trademark of National Electrical Manufacturers Association and is not owned or controlled by Regal Beloit Corporation.

AC / DC Controls

Washguard® Micro Series AC Inverters

NEMA® 4/12 (IP65/IP54)
Epoxy Coated

WASHGUARD® NEMA® 4/12

General Specifications:

- Food-safe white epoxy finish
- No external cooling fan required
- Water, oil and dust-tight enclosure protected
- Same features as Micro Series inverters as shown on previous page

Three Phase Input / Output

Voltage	HP	Output Amps	Input Voltage ◘	Catalogue Number	App. Wgt. (lbs)	Dimension Key
200-240 Volts	1/2	2.2	200-240	**174935.00**	8	G
	1	4.0	200-240	**174936.00**	8	G
	1 1/2	5.2	200-240	**174482.00**	8	Y
	2	6.8	200-240	**174937.00**	10	H
	3	9.6	200-240	**174938.00**	11	J
	5	15.2	200-240	**174730.00**	11	K
	7 1/2	22.0	200-240	**174734.00**	27	Q
	10	28.0	200-240	**174737.00**	32	U
	15	43.0	200-240	**174740.00**	40	V
	20	54.0	200-240	**174743.00** ◄	42	AA
	25	68.0	200-240	**174595.00** ◄	53	Z
	30	80.0	200-240	**174596.00** ◄	53	Z
400-480 Volts	1	2.0	400-480	**174939.00**	8	G
	2	3.4	400-480	**174940.00**	10	H
	3	4.8	400-480	**174941.00**	10	H
	5	7.6	400-480	**174942.00**	11	J
	10	14.0	400-480	**174554.00**	11	Q
	15	21.0	400-480	**174749.00**	32	U
	20	27.0	400-480	**174752.00**	36	V
	25	34.0	400-480	**174755.00** ◄	42	AA
	30	40.0	400-480	**174757.00** ◄	53	AA
	40	52.0	400-480	**174513.00** ◄	54	Z
	50	65.0	400-480	**174511.00** ◄	75	AB
	60	77.0	400-480	**174574.00** ◄	98	AB
	75	96.0	400-480	**174581.00** ◄	200	AJ
	100	124.0	400-480	**174583.00** ◄	300	AO
	125	156.0	400-480	**174585.00** ◄	310	AO
480-590 Volts	1	1.6	480-590	**174943.00**	8	G
	2	2.7	480-590	**174944.00**	10	H
	3	3.9	480-590	**174945.00**	10	H
	5	6.1	480-590	**174946.00**	11	J
	7 1/2	9.0	480-590	**174549.00**	13	K
	10	11.0	480-590	**174556.00**	17	Q
	15	17.0	480-590	**174763.00**	38	U
	20	22.0	480-590	**174766.00**	40	V
	25	27.0	480-590	**174769.00** ◄	42	AA
	30	32.0	480-590	**174597.00** ◄	53	AA
	40	41.0	480-590	**174512.00** ◄	54	Z
	50	52.0	480-590	**174510.00** ◄	75	AB
	60	62.0	480-590	**174575.00** ◄	98	AB

◄ Enclosures are NEMA 12 only – others are NEMA 4/12
◘ User programmable for 50Hz and other voltage inputs

Specifications are subject to change without notice.
Dimension Table see page 268-269.

NEMA is a trademark of National Electrical Manufacturers Association and is not owned or controlled by Regal Beloit Corporation.

LEESON®

Washguard® Micro Series AC Inverters

NEMA® 4X (IP65) Stainless Steel

WASHGUARD® NEMA® 4X

General Specifications:

- 300-Series stainless steel
- No external cooling fans
- Must be protected from caustic agents
- Same features as NEMA 1 Micro Series inverters

Three Phase Input / Output

Voltage	HP	Output Amps	Input Voltage ◘	Catalogue Number	App. Wgt. (lbs)	Dimension Key
200-240 Volts	1/2	2.2	200-240	**174527.00**	8	G
	1	4.0	200-240	**174528.00**	8	G
	1 1/2	5.2	200-240	**174529.00**	8	Y
	2	6.8	200-240	**174530.00**	10	H
	3	9.6	200-240	**174531.00**	11	J
	5	15.2	200-240	**174732.00**	11	K
	7 1/2	22.0	200-240	**174735.00**	27	Q
	10	28.0	200-240	**174738.00**	32	U
	15	43.0	200-240	**174741.00**	40	V
400-480 Volts	1	2.0	400-480	**174532.00**	8	G
	2	3.4	400-480	**174533.00**	10	H
	3	4.8	400-480	**174534.00**	10	H
	5	7.6	400-480	**174535.00**	11	J
	10	14.0	400-480	**174747.00**	11	Q
	15	21.0	400-480	**174750.00**	32	U
	20	27.0	400-480	**174753.00**	36	V
480-590 Volts	1	1.6	480-590	**174536.00**	8	G
	2	2.7	480-590	**174537.00**	10	H
	3	3.9	480-590	**174538.00**	10	H
	5	6.1	480-590	**174539.00**	11	J
	7 1/2	9.0	480-590	**174759.00**	13	K
	10	11.0	480-590	**174761.00**	17	Q
	15	17.0	480-590	**174764.00**	38	U
	20	22.0	480-590	**174767.00**	40	V

◘ User programmable for 50Hz and other voltage inputs.

Specifications are subject to change without notice.
Dimension Table see page 268-269.

NEMA is a trademark of National Electrical Manufacturers Association and is not owned or controlled by Regal Beloit Corporation.

AC / DC Controls

Washguard® Micro Series AC Inverters

NEMA® 4X (IP65)
Stainless Steel

WASHGUARD® NEMA® 4X

Washguard NEMA 4X (IP65) Stainless Steel - Single Phase Input - 230 Volts Three Phase Output

(Use with three phase 230 Volts motor)

HP	Output Amps	Input Voltage ◘	Catalogue Number	App. Wgt. (lbs)	Dimension Key
1/4	1.4	115/230	**174519.00**	8	AD
1/2	2.2	115/230	**174520.00**	8	X
1	4.0	115/230	**174521.00**	11	H
1 1/2	5.2	115/230	**174517.00**	11	H
2	6.8	208-230	**174525.00**	11	H
3	9.6	208-230	**174526.00**	12	J

◘ User programmable for 50Hz and other voltage inputs.
Specifications are subject to change without notice.
Dimension Table see page 268-269.

Washguard NEMA 4 (IP65) Epoxy Coated - Single Phase Input - 230 Volts Three Phase Output

(Use with three phase 230 Volts motor)

HP	Output Amps	Input Voltage ◘	Catalogue Number	App. Wgt. (lbs)	Dimension Key
1/4	1.4	115/230	**174996.00**	8	AD
1/2	2.2	115/230	**174998.00**	8	X
1	4.0	115/230	**174999.00**	11	H
1 1/2	5.2	115/230	**174515.00**	11	H
2	6.8	208-230	**174475.00**	11	H
3	9.6	208-230	**174729.00**	12	J

◘ User programmable for 50Hz and other voltage inputs.
Specifications are subject to change without notice.
Dimension Table see page 268-269.

NEMA is a trademark of National Electrical Manufacturers Association and is not owned or controlled by Regal Beloit Corporation.

NEW!

General Specifications:

- New state of the art inverter designs
- Space saving design: 2.36 in. (60 mm) wide, 5.12 in. (130 mm) deep, also zero-clearance mounting
- RoHS2-Compliance
- Fulfills IE2 according to new EN 50598-2
- Out of the box commissioning
- Easy commissioning with memory module
- Improved usability for easy commissioning
- Parameterization with USB module without external power supply
- Innovative interface options enable set-up times faster than ever before
- The wide-ranging modular system enables various product configurations depending on machine requirements
- Spring loaded control terminals (fixed)
- More functionalities for advanced applications
- Fieldbus - CANopen/Modbus (optional)
- VFC Eco mode for more energy savings
- The VSD is recommended in applications for pumps and fans, conveyors, formers, winders and machine tools

Keypad

WLAN module

USB module

Remote keypad

Blind cover

Features: Three set-up methods

- Keypad - If you only need to set up a few parameters, such as acceleration time, this can be done quickly from the keypad
- Smart Keypad for use with an Android App. Enables adjustment to a simple application such as a conveyor
- Easy Starter - For use if the function is needing a potentionmeter or control for positioning application needs to be set

AC / DC Controls

VSD Series

IP20 Enclosure Protection

NEW!

For Use With Three Phase Induction or PMAC Motors

Fieldbus	Input Voltage	HP	Output Amps	Catalogue Number	App. Wgt. (lbs)	Dimensions H x W x D (in)
N/A	230/240 Volts - 1 or 3 Phase	1/3	1.7	**176105.00**	2	6.1 x 2.36 x 5.12
		1/2	2.4	**176106.00**	2	6.1 x 2.36 x 5.12
		3/4	3.2	**176107.00**	2	7.09 x 2.36 x 5.12
		1	4.2	**176108.00**	2	7.09 x 2.36 x 5.12
		1 1/2	6.0	**176109.00**	3	9.84 x 2.36 x 5.12
		2	7.0	**176110.00**	3	9.84 x 2.36 x 5.12
		3	9.6	**176111.00**	3	9.84 x 2.36 x 5.12
CANopen/Modbus	230/240 Volts - 1 or 3 Phase	1/3	1.7	**176112.00**	2	6.1 x 2.36 x 5.12
		1/2	2.4	**176113.00**	2	6.1 x 2.36 x 5.12
		3/4	3.2	**176114.00**	2	7.09 x 2.36 x 5.12
		1	4.2	**176115.00**	2	7.09 x 2.36 x 5.12
		1 1/2	6.0	**176116.00**	3	9.84 x 2.36 x 5.12
		2	7.0	**176117.00**	3	9.84 x 2.36 x 5.12
		3	9.6	**176118.00**	3	9.84 x 2.36 x 5.12
N/A	400/480 Volts - 3 Phase	1/2	1.3	**176120.00**	2	6.1 x 2.36 x 5.12
		3/4	1.8	**176121.00**	2	7.09 x 2.36 x 5.12
		1	2.4	**176122.00**	2	7.09 x 2.36 x 5.12
		1 1/2	3.2	**176123.00**	3	9.84 x 2.36 x 5.12
		2	3.9	**176124.00**	3	9.84 x 2.36 x 5.12
		3	5.6	**176125.00**	3	9.84 x 2.36 x 5.12
CANopen/Modbus	400/480 Volts - 3 Phase	1/2	1.3	**176127.00**	2	6.1 x 2.36 x 5.12
		3/4	1.8	**176128.00**	2	7.09 x 2.36 x 5.12
		1	2.4	**176129.00**	2	7.09 x 2.36 x 5.12
		1 1/2	3.2	**176130.00**	3	9.84 x 2.36 x 5.12
		2	3.9	**176131.00**	3	9.84 x 2.36 x 5.12
		3	5.6	**176132.00**	3	9.84 x 2.36 x 5.12

Specifications are subject to change without notice.

Accessories	Catalogue Number
Keypad Interface	**174356.00**
USB Interface	**174357.00**
WiFi Direct Interface Module	**174358.00**
Blank Interface Cover (4-pack)	**174359.00**

Specifications are subject to change without notice.

NEW!

General Specifications:

- New state of the art inverter designs
- Space saving design: 2.36 in. (60 mm) wide, 5.12 in. (130 mm) deep, also zero-clearance mounting
- RoHS2-Compliance
- Fulfills IE2 according to new EN 50598-2
- Out of the box commissioning
- Easy commissioning with memory module
- Improved usability for easy commissioning
- Parameterization with USB module without external power supply
- The wide-ranging modular system enables various product configurations depending on machine requirements
- The VSD is recommended in applications for pumps and fans, conveyors, formers, winders and machine tools
- Pluggable control terminal
- More functionalities for advanced applications
- Fieldbus - EtherCAT, EtherNet/IP, Profinet, CANopen, Modbus, Profibus, (options)
- VFC Eco mode for more energy savings
- Innovative interface options enable set-up times faster than ever before

Features: Three set-up methods

- Keypad - If you only need to set up a few parameters, such as acceleration time, this can be done quickly from the keypad
- Smart Keypad for use with an Android App. Enables adjustment to a simple application such a conveyor
- Easy Starter - For use if the function is needing a potentionmeter or control for a positioning application needs to be set

AC / DC Controls

VSD - Plus Series

IP20 Enclosure Protection

NEW!

For Use With Three Phase Induction or PMAC Motors - Power Units

Input Voltage	HP	Output Amps	Catalogue Number	App. Wgt. (lbs)	Dimensions H x W x D (in)
230/240 Volts - 1 or 3 Phase	1/3	1.7	**176133.00**	2	6.1 x 2.36 x 5.12
	1/2	2.4	**176134.00**	2	6.1 x 2.36 x 5.12
	3/4	3.2	**176135.00**	2	7.09 x 2.36 x 5.12
	1	4.2	**176136.00**	2	7.09 x 2.36 x 5.12
	1 1/2	6.0	**176137.00**	3	9.84 x 2.36 x 5.12
	2	7.0	**176138.00**	3	9.84 x 2.36 x 5.12
	3	9.6	**176139.00**	3	9.84 x 2.36 x 5.12
400/480 Volts - 3 Phase	1/2	1.3	**176140.00**	2	6.1 x 2.36 x 5.12
	3/4	1.8	**176141.00**	2	7.09 x 2.36 x 5.12
	1	2.4	**176142.00**	2	7.09 x 2.36 x 5.12
	1 1/2	3.2	**176143.00**	3	9.84 x 2.36 x 5.12
	2	3.9	**176144.00**	3	9.84 x 2.36 x 5.12
	3	5.6	**176145.00**	3	9.84 x 2.36 x 5.12
	5	9.5	**176146.00**	5	9.84 x 3.54 x 5.12
	7 1/2	13.0	**176147.00**	5	9.84 x 3.54 x 5.12
	10	16.5	**176148.00**	8	10.83 x 4.72 x 5.12
	15	23.5	**176149.00**	8	10.83 x 4.72 x 5.12
	20	32.0	**176150.00**	23	13.78 x 8.07 x 9.06
	25	40.0	**176151.00**	23	13.78 x 8.07 x 9.06
	30	47.0	**176152.00**	23	13.78 x 8.07 x 9.06

Specifications are subject to change without notice.

Control Units

Type	Catalogue Number
Standard I/O	**174362.00**
Application I/O	**174363.00**
CANopen - Standard I/O	**174364.00**
Modbus-RTU - Standard I/O	**174365.00**
Profibus-DP - Standard I/O	**174366.00**
EtherCat - Standard I/O	**174367.00**
Profinet - Standard I/O	**174368.00**
EtherNet/IP - Standard I/O	**174369.00**

Specifications are subject to change without notice.

Accessories	Catalogue Number
Keypad Interface	**174356.00**
USB Interface	**174357.00**
WiFi Direct Interface Module	**174358.00**
Blank Interface Cover (4-pack)	**174359.00**
Remote Keypad Kit	**174370.00**

Specifications are subject to change without notice.

SM2 Series Flux Vector AC Inverters
NEMA® 1 IP31 Enclosure Protection

General Specifications:

- Designed to be used with vector duty rated AC motors
- Open loop flux vector designs
- Typical applications would include: food processing, machinery, material handling and HVAC systems
- Enclosure: NEMA1, IP31, -10 to 55°C, 2.5% derate per °C above 40°C

Standard Features:

Easy Set-up and Operation: Program the vector control in one of four convenient ways:

- From the front of the drive
- The optional remote keypad
- A PC using TechLink software
  (Available free from www.regalbeloit.com)
- The innovative EPM programmer

Modes of operation:

- Open loop flux vector (speed or torque)
- V/Hz (constant or variable)
- Enhanced V/Hz with auto-tuning

Easy to Use Keypad & Display
6-Button Interface:

- Start
- Stop
- Forward/reverse
- Scroll up
- Scroll down
- Enter/mode

Vivid Illumination:

- 4 digit LED display
- Easy to read from a distance
- Movable decimal point

Acceleration/Deceleration Profiles:

- Two Independent accel ramps
- Two Independent decel ramps
- Linear or S-type
- Auxiliary ramp-to-stop

Output Frequency:

- 500 Hz Std., 1000 Hz optional

Selectable Logic Assertion:

- Positive logic input (PNP current sourcing)
- Negative logic input (NPN current sinking)

NEMA is a trademark of National Electrical Manufacturers Association
and is not owned or controlled by Regal Beloit Corporation.

AC / DC Controls

SM2 Series Flux Vector AC Inverters
NEMA® 1 IP31 Enclosure Protection

Multiple Braking Functions

- Loss of follower management
- Speed commands: keypad, jog, floating point control
- Voltage: Scalable 0-10 VDC
- Current: Scalable 4-20 mA, potentiometer
- 8 preset speeds
- Process control: PID modes: direct or reverse acting
- PID sleep mode
- Voltage monitoring
- Current monitoring
- Real time monitoring: 8 register fault history, software version drive network ID, DC bus
- Voltage (V), motor voltage (V), output current (%) motor current (A), motor torque (%), power (kW) energy consumption (kWh), heatsink
- Temperature (°C), 0-10 VDC input (user defined), 4-20 mA input (user defined) PID feedback (user defined), analog output (% load, % torque, kW), network speed (baud rate), terminal continuity, keypad status
- Elapsed run time (hours), elapsed power on time (hours)
- Standards: UL (USA), cUL (Canada), CE (Europe), GOST (Russia/Ukraine) C-Tick (Australia/New Zealand)

Single Phase Input / 230 Volts Three Phase Output Used with Three Phase 230 Volts Motors

Voltage	HP	Output Amps	Input Voltage ◘	Catalogue Number	App. Wgt. (lbs)	Dimensions H x W x D (in.)
115-230 Volts	1/3	1.7	115/230	**174603.00**	3	7.5 x 3.9 x 4.35
	1/2	2.4	115/230	**174604.00**	3	7.5 x 3.9 x 4.35
	1	4.2	115/230	**174605.00**	3	7.5 x 3.9 x 4.35
	1 1/2	6.0	115/230	**174651.00**	5	7.5 x 3.9 x 5.45

Specifications are subject to change without notice.

Single or Three Phase Input / 230 Volts Three Phase Output Used with Three Phase 230 Volts Motors.

Voltage	HP	Output Amps	Input Voltage ◘	Catalogue Number	App. Wgt. (lbs)	Dimensions H x W x D (in.)
208-240 Volts	1/3	1.7	208/240	**174606.00£**	3	7.5 x 3.9 x 4.35
	1/2	2.4	208/240	**174607.00**	3	7.5 x 3.9 x 4.35
	1	4.2	208/240	**174608.00**	3	7.5 x 3.9 x 4.35
	1 1/2	6.0	208/240	**174609.00**	4	7.5 x 3.9 x 5.45
	2	7.0	208/240	**174610.00**	4	7.5 x 3.9 x 5.45
	3	9.6	208/240	**174611.00**	4	7.5 x 3.9 x 5.45

£ LEESON® model 174606.00 is single-phase input only.
◘ User programmable for 50Hz and other voltage inputs.

Specifications are subject to change without notice.

NEMA is a trademark of National Electrical Manufacturers Association and is not owned or controlled by Regal Beloit Corporation.

Three Phase Input / Output

Voltage	HP	Output Amps	Input Voltage ◘	Catalogue Number	App. Wgt. (lbs)	Dimensions H x W x D (in.)
200-240 Volts	1 1/2	6.0	200/240	**174612.00 ***	4	7.5 x 3.9 x 5.45
	2	7.0	200/240	**174613.00 ***	4	7.5 x 3.9 x 5.45
	3	9.6	200/240	**174614.00 ***	4	7.5 x 3.9 x 5.45
	5	16.5	200/240	**174615.00**	4	7.5 x 3.9 x 5.8
	7 1/2	23.0	200/240	**174616.00**	7	9.83 x 5.12 x 6.3
	10	29.0	200/240	**174617.00**	7	9.83 x 5.12 x 6.3
	15	42.0	200/240	**174618.00**	20	12.33 x 6.88 x 8.08
	20	54.0	200/240	**174619.00**	20	12.33 x 6.88 x 8.08
400-480 Volts	1/2	1.1	400/480	**174620.00**	3	7.5 x 3.9 x 4.35
	1	2.1	400/480	**174621.00**	3	7.5 x 3.9 x 4.35
	1 1/2	3.0	400/480	**174622.00**	4	7.5 x 3.9 x 5.45
	2	3.5	400/480	**174623.00**	4	7.5 x 3.9 x 5.45
	3	4.8	400/480	**174624.00**	4	7.5 x 3.9 x 5.45
	5	8.2	400/480	**174625.00**	4	7.5 x 3.9 x 5.8
	7 1/2	11.0	400/480	**174626.00**	7	9.83 x 5.12 x 6.3
	10	14.0	400/480	**174627.00**	7	9.83 x 5.12 x 6.3
	15	21.0	400/480	**174628.00**	20	12.33 x 6.88 x 8.08
	20	27.0	400/480	**174629.00**	20	12.33 x 6.88 x 8.08
	25	34.0	400/480	**174630.00**	20	12.33 x 6.88 x 8.08
	30	40.0	400/480	**174991.00**	14	12.5x6.92x8.09
	40	52.0	400/480	**174992.00**	24	14.19x8.72x10.07
	50	65.0	400/480	**174710.00**	31	17.19x8.72x10.07
	60	77.0	400/480	**174711.00**	35	20.19x8.72x10.07
480-590 Volts	1	1.7	480/590	**174631.00**	3	7.5 x 3.9 x 4.35
	2	2.7	480/590	**174632.00**	4	7.5 x 3.9 x 5.45
	3	3.9	480/590	**174633.00**	4	7.5 x 3.9 x 5.45
	5	6.1	480/590	**174634.00**	4	7.5 x 3.9 x 5.8
	7 1/2	9.0	480/590	**174635.00**	7	9.83 x 5.12 x 6.3
	10	11.0	480/590	**174636.00**	7	9.83 x 5.12 x 6.3
	15	17.0	480/590	**174637.00**	20	12.33 x 6.88 x 8.08
	20	22.0	480/590	**174638.00**	20	12.33 x 6.88 x 8.08
	25	27.0	480/590	**174639.00**	20	12.33 x 6.88 x 8.08
	30	32	480/590	**174993.00**	14	12.5 x 6.92 x 8.09
	40	41	480/590	**174994.00**	24	14.19 x 8.72 x 10.07
	50	52	480/590	**174712.00**	31	17.19 x 8.72 x 10.07
	60	62	480/590	**174713.00**	35	20.19 x 8.72 x 10.07

◘ User programmable for 50Hz and other voltage inputs.
* Item to be discontinued once inventory is depleted.

Specifications are subject to change without notice.

NEMA is a trademark of National Electrical Manufacturers Association and is not owned or controlled by Regal Beloit Corporation.

AC / DC Controls

SM4 Series Flux Vector AC Inverters
NEMA® 4 IP65 Enclosure Protection

General Specifications:

- Indoor use only inverter that is designed to be used with vector duty motors
- Typical applications would include: packaging machinery, food processing, conveying systems, machinery and HVAC systems
- Enclosure: NEMA 4, IP65, -10 to 55°C, derate per °C above 40°C

Standard Features:

Easy Set-up and Operation: Program the vector control in one of four convenient ways:

- From the front of the drive
- The optional remote keypad
- A PC Using TechLink software (Available free from www.regalbeloit.com)
- The innovative EPM programmer

Modes of operation:

- Open loop flux vector (speed or torque)
- V/Hz (constant or variable)
- Enhanced V/Hz with auto-tuning

Easy to Use Keypad & Display 6-Button Interface

- Start
- Stop
- Forward/reverse
- Scroll up
- Scroll down
- Enter/mode

Vivid Illumination:

- 4 digit LED display
- Easy to read from a distance
- Movable decimal point

Acceleration/Deceleration Profiles:

- Two independent accel ramps
- Two independent decel ramps
- Linear or S-type
- Auxiliary ramp-to-stop

Output Frequency:

- 500 Hz Std., 1000 Hz optional

Selectable Logic Assertion:

- Positive logic input (PNP current sourcing)
- Negative logic input (NPN current sinking)

Multiple Braking Functions

- Loss of follower management
- Speed commands: keypad, jog, floating point control
- Voltage: scalable 0-10 VDC
- Current: scalable 4-20 mA, potentiometer
- 8 Preset speeds
- Process control: PID modes: direct or reverse acting
- PID sleep mode
- Voltage monitoring
- Current monitoring
- Real time monitoring: 8 register fault history, software version drive network ID, DC bus
- Voltage (V), motor voltage (V), output current (%) motor current (A), motor torque (%), power (kW) energy consumption (kWh), heatsink
- Temperature (°C), 0-10 VDC input (user defined), 4-20 mA input (user defined) PID feedback (user defined), analog output (% load, % torque, kW), network speed (baud rate), terminal continuity, keypad status
- Elapsed run time (hours), elapsed power on time (hours)
- Standards: UL (USA), cUL (Canada), CE (Europe), GOST (Russia/Ukraine) C-Tick (Australia/New Zealand)

NEMA is a trademark of National Electrical Manufacturers Association and is not owned or controlled by Regal Beloit Corporation.

LEESON®

Single Phase Input / Three Phase Output

(Use with three phase 230 Volts motor)

Voltage	HP	Output Amps	Input Voltage ◘	Catalogue Number	App. Wgt. (lbs)	Dimensions H x W x D (in.)
115/230 Volts	1/2	2.4	115/230	**174652.00**	4	8.0 x 6.28 x 4.47
	1	4.2	115/230	**174653.00**	4	8.0 x 6.28 x 4.47
	1 1/2	6.0	115/230	**174654.00**	4	8.0 x 6.28 x 4.47

◘ User programmable for 50Hz and other voltage inputs.

Specifications are subject to change without notice.

Single or Three Phase Input / Three Phase Output

(Use with three phase 230 Volts motor)

Voltage	HP	Output Amps	Input Voltage ◘	Catalogue Number	App. Wgt. (lbs)	Dimensions H x W x D (in.)
208-240 Volts	1/2	2.4	208-240	**174655.00**	4	8.0 x 6.28 x 4.47
	1	4.2	208-240	**174656.00**	4	8.0 x 6.28 x 4.47
	1 1/2	6.0	208-240	**174657.00**	6	8.0 x 6.28 x 6.31
	2	7.0	208-240	**174658.00**	6	8.0 x 6.28 x 6.31
	3	9.6	208-240	**174659.00**	7	8.0 x 7.12 x 6.77

◘ User programmable for 50Hz and other voltage inputs.

Specifications are subject to change without notice.

Three Phase Input / Three Phase Output

Voltage	HP	Output Amps	Input Voltage ◘	Catalogue Number	App. Wgt. (lbs)	Dimensions H x W x D (in.)
208-240 Volts	5	16.5	208-240	**174660.00**	12	10.0 x 8.96 x 8.0
	7 1/2	23.0	208-240	**174661.00** ∫	11	10.0 x 8.04 x 8.0
	10	29.0	208-240	**174662.00** ∫	11	10.0 x 8.04 x 8.0
	15	42.0	208-240	**174699.00** ∫	25	14.5 x 9.42 x 9.45
	20	54.0	208-240	**174700.00** ∫	26	14.5 x 9.42 x 9.45
400-480 Volts	1/2	1.1	400-480	**174671.00**	4	8.0 x 6.28 x 4.47
	1	2.1	400-480	**174672.00**	4	8.0 x 6.28 x 4.47
	1 1/2	3.0	400-480	**174673.00**	6	8.0 x 6.28 x 6.31
	2	3.5	400-480	**174674.00**	6	8.0 x 6.28 x 6.31
	3	4.8	400-480	**174675.00**	6	8.0 x 6.28 x 6.31
	5	8.2	400-480	**174676.00**	12	10.0 x 8.96 x 8.0
	7 1/2	11.0	400-480	**174677.00**	12	10.0 x 8.96 x 8.0
	10	14.0	400-480	**174678.00** ∫	11	10.0 x 8.04 x 8.0
	15	21.0	400-480	**174701.00** ∫	25	14.5 x 9.42 x 9.45
	20	27.0	400-480	**174702.00** ∫	26	14.5 x 9.42 x 9.45
	25	34.0	400-480	**174703.00** ∫	26	14.5 x 9.42 x 9.45
	30	40.0	400-480	**174704.00** ∫	31	18.5 x 9.42 x 9.45
480-590 Volts	1	1.7	480-590	**174663.00**	4	8.0 x 6.28 x 4.47
	2	2.7	480-590	**174664.00**	6	8.0 x 6.28 x 6.31
	3	3.9	480-590	**174665.00**	6	8.0 x 6.28 x 6.31
	5	6.1	480-590	**174666.00**	12	10.0 x 8.96 x 8.0
	7 1/2	9.0	480-590	**174667.00**	12	10.0 x 8.96 x 8.0
	10	11.0	480-590	**174668.00** ∫	11	10.0 x 8.04 x 8.0

◘ User programmable for 50Hz and other voltage inputs.
∫ = Fan cooled - other controls are convection cooled.

Specifications are subject to change without notice.

NEMA is a trademark of National Electrical Manufacturers Association and is not owned or controlled by Regal Beloit Corporation.

AC / DC Controls

SM Plus Sub-Micro AC Inverters

IP20 Enclosure Protection

SM PLUS

General Specifications:

- Ultra-compact designs include 18 isolated I/O terminals plus
- RS485 Modbus®* serial communication

Features:

- Removable electronic programming module
- Input line voltage calibration—optimizes over and under voltage trip levels
- Current limit to 180% with frequency foldback
- Adjustable carrier frequency (4 to 10 kHz)
- Adjustable V/Hz
- Output frequency to 240 Hz
- Seven preset speeds
- Automatic restart after fault
- Control via drive face, terminal strip or optional remote keypad
- Coast or ramp to stop
- Independent accel and decel adjustment
- Forward only or forward and reverse direction
- Adjustable DC injection braking
- Speed reference: Keypad, 0-10 VDC, or 4-20 mA
- Speed reference calibration
- Speed and load indicating output signal selection: 0-10 VDC or 4-20mA
- Output signal calibration
- Fixed boost for high starting torque
- Accel boost for high torque accelerating at any speed
- Slip compensation
- Three-digit LED display
- Password protection
- Fault history: Stores eight previous trips
- Terminal status indication
- IP20 enclosure with finger safe terminals
- Dynamic braking and remote keypad kits available on pages 270-271

Single Phase Input / Three Phase Output

(Use with three phase 230 Volts motor)

Voltage	HP	Output Amps	Input Voltage ◘	Catalogue Number	App. Wgt. (lbs)	Dimension Key
115/230 Volts	1	4.2	115/230	**174492.00**	4	B1
	1 1/2	6.0	115/230	**174445.00**	5	B1

◘ User programmable for 50Hz and other voltage inputs.
Dimension table see page 267.

Specifications are subject to change without notice.

Product on this page will be discontinued after stock is depleted. Please refer to page 258 & 259 for replacement.

*Modbus is believed to be a trademark or trade name of Schneider Electric and is not owned or controlled by Regal Beloit Corporation.

Single or Three Phase Input / Three Phase Output

(Use with three phase 230 Volts motor)

Voltage	HP	Output Amps	Input Voltage ◘	Catalogue Number	App. Wgt. (lbs)	Dimension Key
200-240 Volts	1/4	1.4	200-240	**174452.00**	2	A1
	1/2	2.2	200-240	**174453.00**	2	A1
	1	4.2	200-240	**174454.00**	3	A2
	1 1/2	6.0	200-240	**174493.00**	4	B1
	2	6.8	200-240	**174494.00**	5	B2
	3	9.6	200-240	**174495.00**	5	B2
	5	15.2	200-240	**174444.00**	8	C1

◘ User programmable for 50Hz and other voltage inputs.

Specifications are subject to change without notice.

Three Phase Input / Three Phase Output

Voltage	HP	Output Amps	Input Voltage ◘	Catalogue Number	App. Wgt. (lbs)	Dimension Key
200-240 Volts	1	4.2	200-240	**174455.00**	3	A2
	1 1/2	6.0	200-240	**174456.00**	3	A3
	2	6.8	200-240	**174457.00**	4	A3
	3	9.6	200-240	**174458.00**	4	A3
	5	15.2	200-240	**174446.00**	4	B2
	7 1/2	22.0	200-240	**174438.00**	8	C1
	10	28.0	200-240	**174439.00**	8	C1
	15	42.0	200-240	**174429.00**	13	D1
	20	54.0	200-240	**174430.00**	14	D1
400-480 Volts	1/2	1.1	400-480	**174459.00**	2	A1
	1	2.1	400-480	**174460.00**	3	A2
	1 1/2	3.0	400-480	**174461.00**	3	A3
	2	3.4	400-480	**174462.00**	4	A3
	3	4.8	400-480	**174463.00**	4	A3
	5	7.6	400-480	**174447.00**	5	B2
	7 1/2	11.0	400-480	**174440.00**	8	C1
	10	14.0	400-480	**174441.00**	8	C1
	15	21.0	400-480	**174431.00**	13	D1
	20	27.0	400-480	**174432.00**	14	D1
	25	34.0	400-480	**174433.00**	14	D1
	30	40.0	400-480	**174500.00**	14	D1
480-590 Volts	1	1.7	480-590	**174464.00**	3	A2
	2	3.0	480-590	**174491.00**	4	A3
	3	4.2	480-590	**174497.00**	5	B2
	5	6.6	480-590	**174448.00**	5	B2
	7 1/2	9.9	480-590	**174442.00**	8	C1
	10	12.2	480-590	**174443.00**	8	C1
	15	19.0	480-590	**174434.00**	8	D1
	20	24.0	480-590	**174435.00**	14	D1
	25	27.0	480-590	**174436.00**	14	D1

◘ User programmable for 50Hz and other voltage inputs.
Dimension Table see page 267.

Specifications are subject to change without notice.

Product on this page will be discontinued after stock is depleted. Please refer to page 258 & 259 for replacement.

AC / DC Controls

SM Series Sub-Micro AC Inverters
IP20 Enclosure Protection

SM SERIES

General Specifications:

- For applications that require less control features that you may find in the SM-Plus series inverters
- Provides 11 isolated I/O terminals with one Form A relay output

Features:

- Removable electronic programming module
- Input line voltage calibration—optimizes over and under voltage trip levels
- Current limit to 180% with frequency foldback
- Adjustable carrier frequency (4 to 10 kHz)
- Adjustable V/Hz
- Output frequency to 240 Hz
- Seven preset speeds
- Automatic restart after fault
- Control via drive face, terminal strip or optional remote keypad
- Coast or ramp to stop
- Independent accel and decel adjustment
- Forward only or forward and reverse direction
- Adjustable DC injection braking
- Speed reference: Keypad, 0-10 VDC, or 4-20 mA
- Speed reference calibration
- Fixed boost for high starting torque
- Accel boost for high torque accelerating at any speed
- Slip compensation
- Three-digit LED display
- Password protection
- Fault history: Stores eight previous trips
- Terminal status indication
- Default parameter reset
- IP20 enclosure with finger safe terminals
- Dynamic braking and remote keypad kits available on page 270-271

Single Phase Input / Three Phase Output
(Use with three phase 230 Volts motor)

Voltage	HP	Output Amps	Input Voltage ◘	Catalogue Number	App. Wgt. (lbs)	Dimension Key
110-120 Volts	1/3	1.7	110-120	**174263.00**	2	A5
	1/2	2.4	110-120	**174264.00**	2	A5
	1	4.2	110-120	**174265.00**	3	B5
	1 1/2	6.0	110-120	**174266.00**	3	B5

◘ User programmable for 50Hz and other voltage inputs.

Specifications are subject to change without notice.

Single Phase Input / Three Phase Output
(Use with three phase 230 Volts motor)

Voltage	HP	Output Amps	Input Voltage ◘	Catalogue Number	App. Wgt. (lbs)	Dimension Key
200-240 Volts	1/3	1.7	200-240	**174267.00**	2	A5
	1/2	2.4	200-240	**174268.00**	2	A5
	1	4.2	200-240	**174270.00**	3	A6
	1 1/2	6.0	200-240	**174271.00**	4	B5
	2	7.0	200-240	**174272.00**	5	B5
	3	9.6	200-240	**174273.00**	5	B6

◘ User programmable for 50Hz and other voltage inputs.

Specifications are subject to change without notice.

Three Phase Input / Three Phase Output

Voltage	HP	Output Amps	Input Voltage ◘	Catalogue Number	App. Wgt. (lbs)	Dimension Key
200-240 Volts	1/2	2.4	200-240	**174274.00**	2	A5
	1	4.2	200-240	**174276.00**	2	A6
	1 1/2	6.0	200-240	**174277.00**	3	A7
	2	7.0	200-240	**174278.00**	3	A7
	3	9.6	200-240	**174279.00**	3	B6
	5	15.2	200-240	**174288.00**	5	B2
	7 1/2	22.0	200-240	**174280.00**	8	C1
	10	28.0	200-240	**174290.00**	8	C1
	15	42.0	200-240	**174292.00**	14	D1
400-480 Volts	1/2	1.1	400-480	**174281.00**	2	A1
	1	2.1	400-480	**174282.00**	3	A2
	1 1/2	3.0	400-480	**174283.00**	3	A3
	2	3.4	400-480	**174284.00**	4	A3
	3	4.8	400-480	**174286.00**	4	B1
	5	7.8	400-480	**174287.00**	5	B2
	7 1/2	11.0	400-480	**174285.00**	5	B2
	10	14.0	400-480	**174291.00**	8	C1
	15	21.0	400-480	**174293.00**	8	C1

◘ User programmable for 50Hz and other voltage inputs.
Dimension Table see page 267.

Specifications are subject to change without notice.

Product on this page will be discontinued after stock is depleted. Please refer to page 258 & 259 for replacement.

LEESON®

AC / DC Controls

AC Control Kits

Dynamic braking components for the Micro Series drives. Micro Series drives can be modified to include dynamic braking. The modifications involve replacing board(s) inside of the drive as well as adding a dynamic braking resistor in a separate enclosure. Larger drives require a combination of dynamic braking board and an additional Form C relay board. Instructions are included with the boards. Also available as a modification, see Mod Squad section.

Dynamic Braking Boards*

Drive HP	Drive Voltage Rating	Catalogue Number	App. Wgt. (lbs)
1/2-3	All	**174184.00**	2
5	200-230V	**174185.00**	2
	460-480V	**174185.00**	2
	550-575V	**174184.00**	2

* Dynamic braking resistors are required with the dynamic braking boards. Specifications are subject to change without notice.

Dynamic Braking Resistors**

Drive HP	Drive Voltage Rating	Catalogue Number	App. Wgt. (lbs)
1/2	200-230V	**174178.00**	1
1	200-230V	**174179.00**	1
	460-480V	**174179.00**	1
	550-575V	**174178.00**	1
1 1/2	200-230V	**174179.00**	1
2	200-230V	**174180.00**	1
	460-480V	**174180.00**	1
	550-575V	**174179.00**	1
3	200-230V	**174182.00**	1
	460-480V	**174182.00**	1
	550-575V	**174181.00**	1
5	200-230V	**174183.00**	1
	460-480V	**174183.00**	1
	550-575V	**174182.00**	1
7 1/2	200-230V	**174143.00**	1
	460-480V	**174143.00**	1
	550-575V	**174148.00**	1
10	200-230V	**174143.00**	1
	460-480V	**174143.00**	1
	550-575V	**174148.00**	1
15-20	200-230V	**174144.00**	1
	460-480V	**174144.00**	1
	550-575V	**174149.00**	1
25-30	200-230V	**174145.00**	1
	460-480V	**174145.00**	1
	550-575V	**174140.00**	1
40	460-480V	**174146.00**	1
	550-575V	**174141.00**	1
50-60	460-480V	**174147.00**	1
	550-575V	**174142.00**	1

** Dynamic braking resistors are provided with mounting brackets. Specifications are subject to change without notice.

Dynamic Braking Boards With Form C Relay Board*

Drive HP	Drive Voltage Rating	Catalogue Number	App. Wgt. (lbs)
7 1/2	200-230V	**174192.00**	2
7 1/2	400-480V	**174193.00**	2
7 1/2	480-575V	**174193.00**	2
10-60	All	**174192.00**	2

* Dynamic braking resistors are required with the dynamic braking boards. Specifications are subject to change without notice.

AC Control Kits

Cable and keypad are purchased separately. Installing the remote keypad and cable involves partially dis-assembling the drive. Instructions are included with the keypad. Also available as a modification, see Mod Squad section.

Remote Keypads & Cables

(For Micro Series, NEMA® 1, Drives*)

Item	Catalogue Number	App. Wgt. (lbs)
Keypad	**174177.00**	2
2.5 ft. Cable	**174174.00**	2
5 ft. Cable	**174175.00**	2
10 ft. Cable	**174176.00**	2

* Compatible with any Micro Series, NEMA 1, drive.

NOTE: Using the remote keypad on a Washguard® inverter is not recommended, for the control will no longer meet NEMA® 4/12 sealing requirements.

Specifications are subject to change without notice.

NEMA is a trademark of National Electrical Manufacturers Association and is not owned or controlled by Regal Beloit Corporation.

Micro Series Dimension Information
Techlink Programming and Monitoring Software

Techlink software is a powerful drive configuration tool that works in a Microsoft Windows®* environment. TechLink supports the following drives sold by Regal: Micro Series, SM Plus Series and SM Vector Series. TechLink allows a drive program to be created off line and to access the drive directly while connected over RS232 or RS485 (depending on the drive). RS485 supports several drives on one drive network but will require an RS232 to RS485 converter for most personal computers.

First time users visit our website, under "Links and Downloads" to download TechLink software. Regal frequently updates Techlink software and the Models files to keep current with our expanding product offering and upgrades to our existing lines. If you have Techlink software installed on your computer and would like to check to see if you have the most current version of the TechLink program or the Models data, check the versions on the opening TechLink screen to the versions below. You will only need to download the program that has been updated. Each program below is a self extracting zip file; after expanding, run setup. exe to install.

The diagrams below illustrate how to connect the LEESON® Micro Series, SM Plus and SM Vector Series drives to a computer in order to use the TechLink software.

Note 1: When using serial communications, terminal 2 on the drive MUST be connected to chassis ground.

SM Plus & SM Vector Series

The SM Plus and SM Vector Series drives are RS-485, so a RS-232 to RS-485 or USB to RS-485 converter is required. The converter connects to the computer using a standard serial connection. A twisted pair connects the converter to the drive.

Note 2: Refer to the converter manufacturer's instructions for proper converter configuration. The converter is not supplied by Regal.

SM Plus & SM Vector Series Control Strip

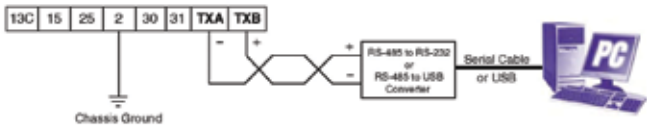

Micro Series

The Micro Series drives are RS-485, so a RS-232 to RS-485 or USB to RS-485 converter is required. The converter connects to the computer using a standard serial or USB connection. A twisted pair connects the converter to the drive.

Note: 3 Refer to the converter manufacturer's instructions for proper converter configuration. The converter is not supplied by Regal.

MIcro Series Control Strip

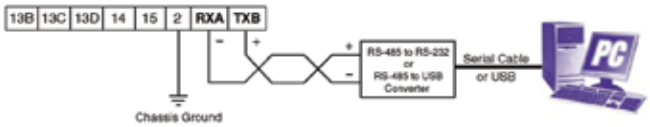

DIMENSIONS: SM AND SM PLUS SERIES INVERTERS

"A" Chassis

Depth: A1: 3.94 in.
A2: 4.74 in.
A3: 5.74 in.
A5: 3.26 in.
A6: 3.63 in.
A7: 5.56 in.

"B" Chassis

Depth: B1: 5.24 in.
B2: 6.74 in.
B5: 4.88 in.
B6: 5.53 in.

"C" Chassis

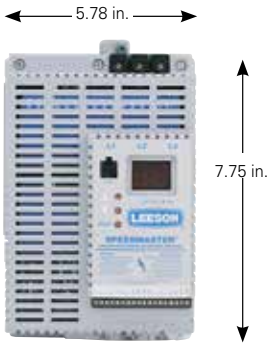

Depth: C1: 7.18 in.

"D" Chassis

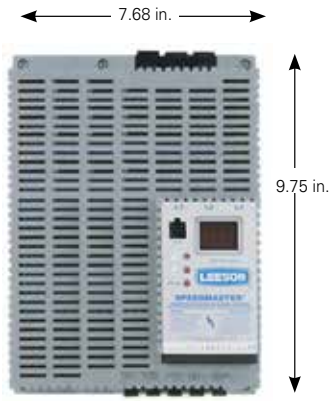

Depth: D1: 8.00 in.

Dimensions shown for reference only. Contact your sales representative for detailed drawing.
PDF file of Manual available at www.regalbeloit.com/Brands/LEESON/Technical-Information
Specifications are subject to change without notice.

*Microsoft Windows is believed to be a trademark of Microsoft Corporation and is not owned or controlled by Regal Beloit Corporation.

AC / DC Controls

Dimension Information for Micro Series Drives

CONDUIT HOLES FOR 174578.00

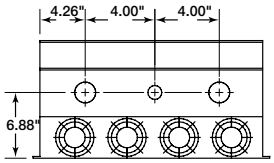

Conduit Holes: Large holes = 1.75"
Small hole = 1.13"

CONDUIT HOLES FOR 174586.00

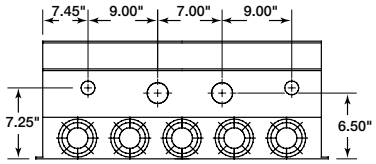

Conduit Holes: Large holes = 3.00"
Small holes = 1.13"

NEMA 1 ONLY

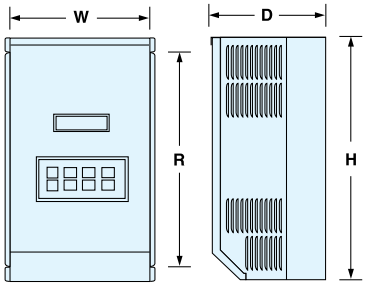

NEMA 4/12
WASHGUARD® ONLY

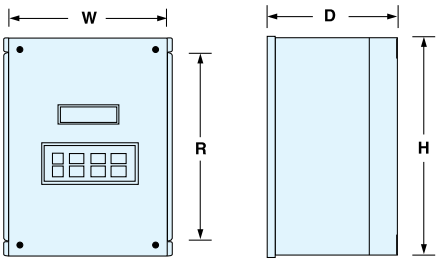

NEMA 1 & NEMA 4/12

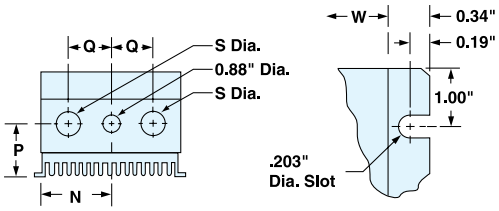

Mounting tab detail

Micro Series Inverter - Dims. (Inches) - NEMA® 1, NEMA 4/12 & NEMA 4X

Dimension Key	H	W	D	N	P	Q	R	S
A	7.50	4.70	3.33	2.35	1.60	1.37	5.50	0.88
B	7.50	4.70	3.63	2.35	1.90	1.37	5.50	0.88
C	7.50	4.70	4.33	2.35	2.60	1.37	5.50	0.88
D	7.50	6.12	4.22	3.77	2.40	1.37	5.50	0.88
E	7.50	6.12	5.12	3.77	3.30	1.37	5.50	0.88
F	7.88	7.86	5.94	5.13	3.95	1.50	5.88	1.13
G	7.88	6.12	4.35	3.06	2.70	1.37	5.88	0.88
H	7.88	7.86	4.90	4.80	3.25	1.37	5.88	0.88
I	9.38	7.86	6.25	5.13	3.95	1.50	7.38	1.13
J	7.88	7.86	5.90	4.80	4.25	1.37	5.88	0.88
K	9.75	10.26	7.20	5.13	5.25	2.00	7.75	1.13
L	11.25	7.86	6.84	3.93	4.19	2.00	7.75	1.38
M	9.38	7.86	6.84	3.93	4.19	2.00	5.88	1.13
N	12.75	7.86	6.84	3.93	4.19	2.00	9.25	1.38
O	12.75	7.86	7.40	3.93	4.19	2.00	9.25	1.38
P	12.75	10.26	7.74	5.13	5.00	2.50	9.25	1.38
Q	11.75	10.26	8.35	5.13	5.75	2.00	9.75	1.13
R	9.38	7.86	7.40	3.93	4.19	2.00	5.88	1.13
S	12.75	10.26	8.25	5.13	5.00	2.50	9.25	1.38
T	15.75	10.26	8.35	5.13	5.75	2.50	12.25	1.38
U	13.75	10.26	8.35	5.13	5.75	2.00	11.75	1.38
V	15.75	10.26	8.35	5.13	5.75	2.00	13.75	1.38
W	19.75	10.26	8.55	5.13	5.75	2.50	16.25	1.75
X	7.88	7.86	3.75	4.80	2.10	1.37	5.88	0.88
Y	7.88	6.12	5.25	3.06	3.60	1.37	5.88	0.88
Z	20.25	10.26	8.35	5.13	5.75	2.00	16.25	1.38
AA	15.75	10.26	8.35	5.13	5.75	2.00	11.75	1.38
AB	21.00	13.72	8.35	5.13	6.10	2.00	16.25	1.38
AC	7.50	6.12	3.63	3.77	1.80	1.37	5.50	0.88
AD	7.88	6.12	3.63	3.06	2.00	1.37	5.88	0.88
AE	25.00	13.00	10.50	5.56	6.50	2.62	–	1.38
AF	47.00	16.64	11.85		SEE CHART			
AG	29.00	16.64	11.85	7.14	6.88	3.12	–	1.75
AH	29.00	24.42	11.85	11.12	6.50	4.50	–	2.50
AI	29.00	36.66	11.85	11.50	9.00	4.50	–	2.50
AJ	37.00	18.00	13.30	7.50	8.00	3.13	7.14	1.75
AK	39.00	26.00	13.30	11.50	9.00	4.50	9.14	2.50
AL	29.00	36.66	11.85		SEE CHART			
AM	31.00	14.00	11.86	6.00	7.50	2.62	5.64	1.38
AN	49.00	18.00	13.30	7.50	8.00	3.13	7.14	1.75
AO	39.00	26.00	13.30	11.50	9.00	4.50	9.14	2.50

NEMA is a trademark of National Electrical Manufacturers Association and is not owned or controlled by Regal Beloit Corporation.

LEESON®

Type 12 Dimensions for models rated above 30HP at 240/200 VAC and 60 HP at 400/480 VAC

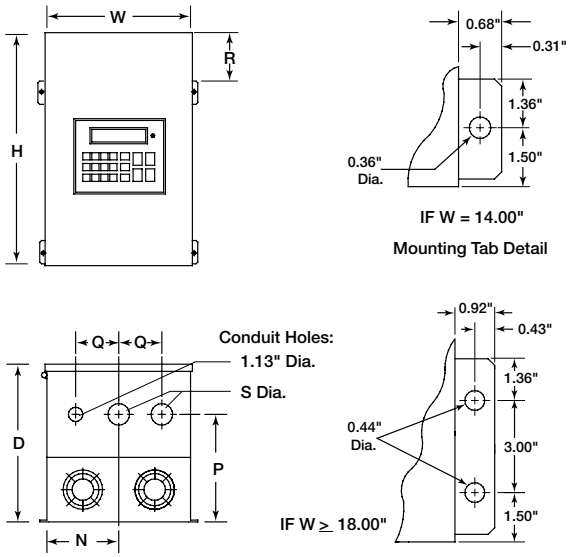

Type 1 Dimensions for models rated above 30HP at 240/200 VAC and 60 HP at 590/480/400 VAC

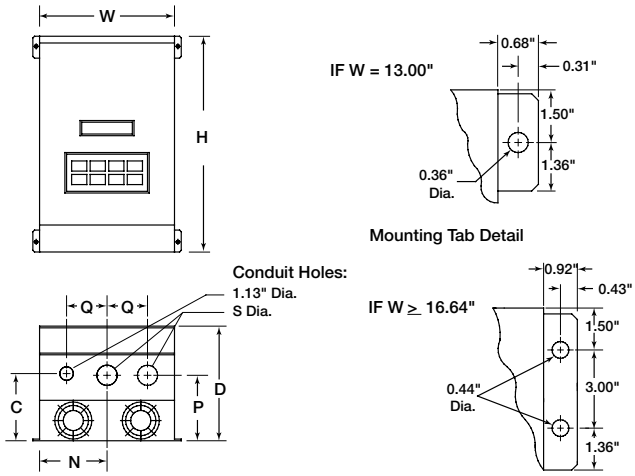

Electronic Programing Unit

Electronic Programming Unit allows off-line set-up and replication of the drive's plug-in electronic programming module (shown at right). Excellent for multi-drive applications. Keypad input and alphanumeric display simplify programming. RS-232 serial port allows downloading of configuration files from personal computer.

Catalogue Number	App. Wgt. (lbs)
EEPM1RA	2

Specifications are subject to change without notice.

Contact your local LEESON® products sales office for information.

EPM Bulk Pack

Plug-in electronic programming modules (EPM). Allow off-line set-up and replication of program using Electronic Programming Unit. Set of 10.

Catalogue Number	App. Wgt. (lbs)
174190.00	1

Specifications are subject to change without notice.

Inverter Accessory Parts

Description	Catalogue Number
Micro Series Keypad	**006707.01**
Speed Pot (10k/5w pot, washers & nut)	**006708.01**
Speed Pot (10k/5w pot, washers & nut)	**KTP-0001**
Legend Plate	**KTP-0023**
Knob	**KTP-0010**

Specifications are subject to change without notice.

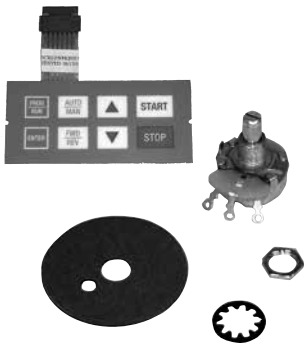

AC / DC Controls

AC Control Kits

Accessories For The SM & SM-Plus

Dynamic Braking Modules With Built-in Dynamic Braking Resistors¤

Dynamic braking components for the SM & SM-Plus series drives: Dynamic braking is available for the SM & SM-Plus series drives as a separate dynamic braking module. Lower HP modules have the control electronics and the dynamic braking resistor in one convenient package. Larger units require a separate resistor. The modules can be panel or DIN rail mounted.

Note: Modules listed below will be discontinued after stock is depleted.

Drive HP	Motor Voltage Rating	Catalogue Number	App. Wgt. (lbs)
1/4-1/2	208-230V	**174400.00**	2
	400-480V	**174406.00**	2
1 - 1 1/2	208-230V	**174401.00**	3
	400-480V	**174407.00**	3
1 - 1 1/2	480-590V	**174412.00**	3
2 -3	208-230V	**174402.00**	4
	400-480V	**174408.00**	4
	480-590V	**174413.00**	4
5	208-230V	**174403.00**	5
	400-480V	**174409.00**	5
	480-590V	**174414.00**	5
7 1/2	208-230V	**174404.00**	6
	400-480V	**174410.00**	6
	480-590V	**174415.00**	6
10	208-230V	**174405.00**	8
	400-480V	**174411.00**	8
	480-590V	**174416.00**	8

¤ Braking resistors are included with the module and not purchased separately.
Specifications are subject to change without notice.

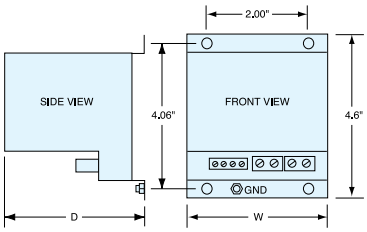

Dynamic Braking Modules Without Resistors*

Drive HP	Motor Voltage Rating	Catalogue Number	App. Wgt. (lbs)
15-20	208-230V	**174417.00**	10
15-30	400-480V	**174418.00**	10
15-25	480-590V	**174419.00**	10

*Dynamic braking resistors are purchased and mounted separately.
Specifications are subject to change without notice.

Accessories For The SM2 Flux Vector Series Drives

Dynamic Braking Components for the SM2 Vector Series Drives

Dynamic Braking Modules With Built-in Dynamic Braking Resistors¤

Dynamic braking components for the SM2 Vector Series drives: Dynamic braking is available for the SM2 Vector Series drives as a separate dynamic braking module. 10 HP and lower modules have control electronics and the dynamic braking resistor in one convenient package. Larger units require a separate resistor. The modules can be panel or DIN rail mounted.

Drive HP	Motor Voltage Rating	Catalogue Number	App. Wgt. (lbs)
1/3-1/2	208 - 230V	**174157.00**	2
	400 - 480V	**174158.00**	2
1 - 1 1/2	208 - 230V	**174151.00**	3
	400 - 480V	**174152.00**	3
	480 - 590V	**174153.00**	3
2 - 3	208 - 230V	**174154.00**	4
	400 - 480V	**174155.00**	4
	480 - 590V	**174156.00**	4
5	208 - 230v	**174159.00**	5
	400 - 480V	**174160.00**	5
	480 - 590V	**174161.00**	5
7 1/2	208 - 230V	**174162.00**	6
	400 - 480V	**174163.00**	6
	480 - 590V	**174164.00**	6
10	208 - 230V	**174165.00**	8
	400 - 480V	**174166.00**	8
	480 - 590V	**174167.00**	8

¤ Braking resistors are included with the module and not purchased separately.
Specifications are subject to change without notice.

Dynamic Braking Resistors**

Drive HP	Motor Voltage Rating	Catalogue Number	App. Wgt. (lbs)
15-20	208-230V	**174144.00**	1
	400-480V	**174144.00**	1
	480-590V	**174149.00**	1
25-30	400-480V	**174145.00**	1
25	480-590V	**174140.00**	1

**Dynamic braking resistors are provided with mounting brackets.
Specifications are subject to change without notice.

DIN Rail - Mounting Kits

Steel plates and fasteners for mounting drives on standard 35mm DIN rails for panel building. Set of six.
174186 for "A" chassis drives.
174187 for "B" chassis drives.
174188 for "C" chassis drives.
Refer to SM Plus and SM Series Dimension Tables for A, B & C listing information.

Catalogue Number	App. Wgt. (lbs)
174186.00	3
174187.00	3
174188.00	3

Specifications are subject to change without notice.

SM4 Potentiometer Kit

Potentiometer kit takes the place of the up/down buttons on the drive's keypad gives operators hands-on speed control over the Inverter's speed range.

Use with Width (W) dim. of:	Catalogue Number	App. Wgt. (lbs)
6.28 or 7.12	**174693.00**	2
8.04 or 8.96	**174697.00**	2
8.96 or 9.42	**174698.00**	2

Specifications are subject to change without notice.

Remote Keypad

Remote keypad kit includes eight-foot connecting cable and gasket. Mounted in proper enclosure, the keypad kit will provide up to NEMA® 4 protection.

Drive Type	Catalogue Number	App. Wgt. (lbs)
SM Plus	**174191.00**	2
SM Series	**174194.00**	2
SM2 Vector*	**174150.00**	2

Specifications are subject to change without notice.
* Up to 10 HP only.

NEMA is a trademark of National Electrical Manufacturers Association and is not owned or controlled by Regal Beloit Corporation.

AC ADJUSTABLE SPEED DRIVES

INPUT LINE REACTORS

LEESON® three-phase AC reactors are intended for use as input (or output) filters for variable frequency drives. Drive performance is improved by protecting the input rectifier from failure or damage and acting as a buffer between the line and the solid state power circuit.

Transient voltages on the AC power line can cause inrush currents to an AC drive. These transient voltage conditions are often caused by utility capacitor switching. The addition of a line reactor will limit the magnitude of inrush current preventing trips and component failures.

OPTIMIZED DRIVE REACTORS KDR

The new KDR™* optimized drive reactors have been designed to provide the rugged reliability customers have come to expect. These reactors are now available for both the input and the output of PWM drives.

The KDR reactors for the input are available in two ratings versions, Low "Z" (low impedance) and High "Z" (high impedance). The Low "Z" units can be used in any application where traditionally either a 1.5% or 3% impedance reactor would be applied. The High "Z" units can be used in any application where traditionally a 5% impedance reactor would be applied.

The output reactors (see page 119) have been selected based on the unit's ability to withstand the rigors of variable system characteristics. With TCI's same outstanding warranty and performance guarantee, the KDR optimized drive reactors offer a superior design and performance solution.

Features:

- Lifetime warranty
- Universal footprint
- All copper windings
- CSA certified
- UL/ULC recognized

208-240 Volts · LOW (Z) IMPEDANCE

Low "Z" units can be used in any application where traditionally either a 1.5% or 3% impedance reactor would be applied.

HP	Catalogue Number	Amps	Watts Loss	Dimensions (Inches) Height x Width x Depth	Wt.	Enc. Size
0.5	**KDRA54L**	2.4	7	4.00 x 4.18 x 3.75	4	C1
0.75	**KDRA53L**	3.5	12	4.00 x 4.18 x 3.75	4	C1
1	**KDRA25L**	4.6	11	4.00 x 4.18 x 3.75	4	C1
1.5	**KDRA26L**	6.6	18	4.00 x 4.18 x 3.75	4	C1
2	**KDRA27L**	7.5	21	4.00 x 4.18 x 3.75	4	C1
3	**KDRA28L**	10.6	29	4.00 x 4.18 x 3.75	4	C1
5	**KDRB22L**	16.7	38	5.00 x 6.00 x 4.00	8	C1
7.5	**KDRB23L**	24.2	48	5.00 x 6.00 x 4.00	8	C2
10	**KDRD25L**	30.8	64	5.75 x 7.20 x 4.25	12	C2
15	**KDRD24L**	46.2	85	5.75 x 7.20 x 4.25	12	C2
20	**KDRD26L**	59.4	94	5.75 x 7.20 x 4.25	12	C2
25	**KDRC22L**	74.8	114	5.75 x 7.20 x 5.00	15	C2
30	**KDRF24L**	88	135	7.00 x 9.00 x 6.00	30	C4
40	**KDRF25L**	114	149	7.00 x 9.00 x 6.00	30	C4
50	**KDRF26L**	143	154	7.00 x 9.00 x 6.00	30	C4
60	**KDRH22L**	169	209	9.00 x 11.00 x 7.00	45	C4
75	**KDRI23L**	211	294	9.00 x 11.00 x 7.00	50	C4
100	**KDRI24L**	273	276	9.00 x 11.00 x 7.00	50	C4
125	**KDRG22L**	343	370	9.00 x 11.00 x 8.00	65	C4
150	**KDRJ23L**	396	401	9.00 x 11.00 x 9.00	70	C5
200	**KDRJ24L**	528	442	9.00 x 11.00 x 9.00	70	C5

Specifications are subject to change without notice.
Note: See page 280 for NEMA® 1 enclosures.

208-240 Volts · HIGH (Z) IMPEDANCE

High "Z" units can be used in any application where traditionally a 5% impedance reactor would be applied.

HP	Catalogue Number	Amps	Watts Loss	Dimensions (Inches) Height x Width x Depth	Wt.	Enc. Size
0.5	**KDRA54H**	2.4	14	4.00 x 4.18 x 3.75	4	C1
0.75	**KDRA53H**	3.5	16.8	4.00 x 4.18 x 3.75	4	C1
1	**KDRA25H**	4.6	23.6	4.00 x 4.18 x 3.75	4	C1
1.5	**KDRA27H**	6.6	30.6	4.00 x 4.18 x 3.75	4	C1
2	**KDRA26H**	7.5	30.5	4.00 x 4.18 x 3.75	4	C1
3	**KDRA28H**	10.6	43.1	4.00 x 4.18 x 3.75	4	C1
5	**KDRB25H**	16.7	53.1	5.00 x 6.00 x 4.00	8	C1
7.5	**KDRB26H**	24.2	66.5	5.00 x 6.00 x 4.00	8	C1
10	**KDRD21H**	30.8	91.8	5.75 x 7.20 x 4.25	12	C2
15	**KDRD22H**	46.2	107.8	5.75 x 7.20 x 4.25	12	C2
20	**KDRC22H**	59.4	113.1	5.75 x 7.20 x 5.00	15	C2
25	**KDRF28H**	74.8	151	7.00 x 9.00 x 6.00	30	C3
30	**KDRF25H**	88	179.2	7.00 x 9.00 x 6.00	30	C4
40	**KDRF26H**	114	192.8	7.00 x 9.00 x 6.00	30	C4
50	**KDRH24H**	143	201	9.00 x 11.00 x 7.00	38	C4
60	**KDRH23H**	169	220	9.00 x 11.00 x 7.00	45	C4
75	**KDRI22H**	211	311.5	9.00 x 11.00 x 7.00	50	C4
100	**KDRI21H**	273	296.4	9.00 x 11.00 x 7.00	50	C4
125	**KDRG25H**	343	346.5	9.00 x 11.00 x 8.00	65	C4
150	**KDRJ22H**	396	465.3	9.00 x 11.00 x 9.00	70	C5
200	**KDRJ21H**	528	516.2	9.00 x 11.00 x 9.00	70	C5

Specifications are subject to change without notice.

*KDR is believed to be the trademark or trade name of TCI and is not owned or controlled by Regal Beloit Corporation.

NEMA is a trademark of National Electrical Manufacturers Association and is not owned or controlled by Regal Beloit Corporation.

480 Volts - LOW (Z) IMPEDANCE

Low "Z" units can be used in any application where traditionally either a 1.5% or 3% impedance reactor would be applied.

HP	Catalogue Number	Amps	Watts Loss	Dimensions (Inches) Height x Width x Depth	Wt.	Enc. Size
0.5	**KDRA6L**	1.1	5.6	4.00 x 4.18 x 3.75	4	C1
0.75	**KDRA7L**	1.6	10	4.00 x 4.18 x 3.75	4	C1
1	**KDRA8L**	2.1	10.4	4.00 x 4.18 x 3.75	4	C1
1.5	**KDRA9L**	3	17	4.00 x 4.18 x 3.75	4	C1
2	**KDRA1L**	3.4	19	4.00 x 4.18 x 3.75	4	C1
3	**KDRA2L**	4.8	23	4.00 x 4.18 x 3.75	4	C1
5	**KDRA3L**	7.6	49	4.00 x 4.18 x 3.75	4	C1
7.5	**KDRA4L**	11	40	4.00 x 4.18 x 3.75	4	C1
10	**KDRA5L**	14	64	4.00 x 4.18 x 3.75	5	C1
15	**KDRB2L**	21	65	5.00 x 6.00 x 4.00	8	C1
20	**KDRB1L**	27	79	5.00 x 6.00 x 4.00	8	C1
25	**KDRD1L**	34	96	5.75 x 7.20 x 4.25	10	C2
30	**KDRD2L**	40	105	5.75 x 7.20 x 4.25	10	C2
40	**KDRC1L**	52	114	5.75 x 7.20 x 5.00	15	C1
50	**KDRF2L**	65	114	7.00 x 9.00 x 6.00	25	C3
60	**KDRF4L**	77	169	7.00 x 9.00 x 6.00	25	C4
75	**KDRF3L**	96	193	7.00 x 9.00 x 6.00	30	C4
100	**KDRH3L**	124	225	7.00 x 9.00 x 7.00	40	C4
125	**KDRH2L**	156	254	9.00 x 11.00 x 7.00	40	C4
150	**KDRH1L**	180	299	9.00 x 11.00 x 7.00	40	C4
200	**KDRG3L**	240	280	9.00 x 11.00 x 8.00	65	C4
250	**KDRG1L**	302	337	9.00 x 11.00 x 8.00	65	C4
300	**KDRG2L**	361	381	9.00 x 11.00 x 8.00	65	C4
350	**KDRJ2L**	414	465	9.00 x 11.00 x 9.00	70	C5

Specifications are subject to change without notice.

480 Volts - HIGH (Z) IMPEDANCE

High "Z" units can be used in any application where traditionally a 5% impedance reactor would be applied.

HP	Catalogue Number	Amps	Watts Loss	Dimensions (Inches) Height x Width x Depth	Wt.	Enc. Size
0.5	**KDRA6H**	1.1	9	4.00 x 4.18 x 3.75	4	C1
0.75	**KDRA7H**	1.6	15	4.00 x 4.18 x 3.75	4	C1
1	**KDRA8H**	2.1	12	4.00 x 4.18 x 3.75	4	C1
1.5	**KDRA9H**	3	23	4.00 x 4.18 x 3.75	4	C1
2	**KDRA1H**	3.4	33	4.00 x 4.18 x 3.75	4	C1
3	**KDRA2H**	4.8	38	4.00 x 4.18 x 3.75	4	C1
5	**KDRA3H**	7.6	80	4.00 x 4.18 x 3.75	4	C1
7.5	**KDRA4H**	11	77	4.00 x 4.18 x 3.75	5	C1
10	**KDRA5H**	14	111	4.00 x 4.18 x 3.75	5	C1
15	**KDRB2H**	21	133	5.00 x 6.00 x 4.00	7	C1
20	**KDRC3H**	27	108	5.75 x 7.20 x 5.00	15	C1
25	**KDRC1H**	34	112	5.75 x 7.20 x 5.00	15	C2
30	**KDRE2H**	40	141	5.75 x 7.20 x 5.00	16	C2
40	**KDRF4H**	52	169	7.00 x 9.00 x 6.00	25	C1
50	**KDRF1H**	65	191	7.00 x 9.00 x 6.00	25	C3
60	**KDRF2H**	77	226	7.00 x 9.00 x 6.00	25	C4
75	**KDRH2H**	96	212	9.00 x 11.00 x 7.00	45	C4
100	**KDRI2H**	124	362	9.00 x 11.00 x 7.00	50	C4
125	**KDRG3H**	156	274	9.00 x 11.00 x 8.00	55	C4
150	**KDRG1H**	180	359	9.00 x 11.00 x 8.00	55	C4
200	**KDRJ1H**	240	420	9.00 x 11.00 x 9.00	70	C4
250	**KDRL1H**	302	548	11.38 x 14.50 x 9.50	110	C4
300	**KDRL2H**	361	786	11.38 x 14.50 x 9.31	95	C4
350	**KDRL3H**	414	750	11.38 x 14.50 x 9.31	100	C5

Specifications are subject to change without notice.

575-600 Volts - LOW (Z) IMPEDANCE

Low "Z" units can be used in any application where traditionally either a 1.5% or 3% impedance reactor would be applied.

HP	Catalogue Number	Amps	Watts Loss	Dimensions (Inches) Height x Width x Depth	Wt.	Enc. Size
0.5	**KDRA55L**	0.9	6	4.00 x 4.18 x 3.75	4	C1
0.75	**KDRA56L**	1.3	9.3	4.00 x 4.18 x 3.75	4	C1
1	**KDRA50L**	1.7	12	4.00 x 4.18 x 3.75	4	C1
1.5	**KDRA51L**	2.4	19	4.00 x 4.18 x 3.75	4	C1
2	**KDRA46L**	2.7	22	4.00 x 4.18 x 3.75	4	C1
3	**KDRA52L**	3.9	23.3	4.00 x 4.18 x 3.75	4	C1
5	**KDRA47L**	6.1	34.7	4.00 x 4.18 x 3.75	4	C1
7.5	**KDRA48L**	9	42.9	4.00 x 4.18 x 3.75	4	C1
10	**KDRA49L**	11	43.8	4.00 x 4.18 x 3.75	5	C1
15	**KDRB45L**	17	66.2	5.00 x 6.00 x 4.00	8	C1
20	**KDRB44L**	22	71.2	5.00 x 6.00 x 4.00	8	C1
25	**KDRB43L**	27	76.7	5.00 x 6.00 x 4.00	8	C1
30	**KDRD42L**	32	106	5.75 x 7.20 x 4.25	12	C2
40	**KDRC43L**	41	109	5.75 x 7.20 x 5.00	15	C2
50	**KDRC44L**	52	123	5.75 x 7.20 x 5.00	15	C2
60	**KDRF46L**	62	181	7.00 x 9.00 x 6.00	30	C3
75	**KDRF47L**	77	194	7.00 x 9.00 x 6.00	30	C3
100	**KDRF45L**	99	194	7.00 x 9.00 x 6.00	30	C4
125	**KDRH43L**	125	261	9.00 x 11.00 x 7.00	45	C4
150	**KDRH44L**	144	253	9.00 x 11.00 x 7.00	45	C4
200	**KDRI42L**	192	342	9.00 x 11.00 x 7.00	50	C4
250	**KDRG47L**	242	394	9.00 x 11.00 x 8.00	65	C4
300	**KDRG45L**	289	374	9.00 x 11.00 x 8.00	65	C4
350	**KDRJ45L**	336	474	9.00 x 11.00 x 9.00	70	C5

Specifications are subject to change without notice.
Note: See page 280 for NEMA 1 Enclosures.

575-600 Volts - HIGH (Z) IMPEDANCE

High "Z" units can be used in any application where traditionally a 5% impedance reactor would be applied.

HP	Catalogue Number	Amps	Watts Loss	Dimensions (Inches) Height x Width x Depth	Wt.	Enc. Size
0.5	**KDRA55H**	0.9	9	4.00 x 4.18 x 3.75	4	C1
0.75	**KDRA52H**	1.3	13	4.00 x 4.18 x 3.75	4	C1
1	**KDRA50H**	1.7	17	4.00 x 4.18 x 3.75	4	C1
1.5	**KDRA51H**	2.4	26	4.00 x 4.18 x 3.75	4	C1
2	**KDRA43H**	2.7	24	4.00 x 4.18 x 3.75	4	C1
3	**KDRA44H**	3.9	35	4.00 x 4.18 x 3.75	4	C1
5	**KDRA45H**	6.1	48	4.00 x 4.18 x 3.75	4	C1
7.5	**KDRB42H**	9	61	5.00 x 6.00 x 4.00	8	C1
10	**KDRB43H**	11	71	5.00 x 6.00 x 4.00	8	C1
15	**KDRB44H**	17	73	5.00 x 6.00 x 4.00	8	C1
20	**KDRD41H**	22	106	5.75 x 7.20 x 4.25	12	C1
25	**KDRC43H**	27	107	5.75 x 7.20 x 5.00	15	C1
30	**KDRE42H**	32	140	5.75 x 7.20 x 5.00	16	C2
40	**KDRF44H**	41	172	7.00 x 9.00 x 6.00	30	C2
50	**KDRF45H**	52	166	7.00 x 9.00 x 6.00	30	C2
60	**KDRH43H**	62	205	9.00 x 11.00 x 6.00	45	C3
75	**KDRH42H**	77	251	9.00 x 11.00 x 6.00	45	C3
100	**KDRI41H**	99	268	9.00 x 11.00 x 7.00	50	C4
125	**KDRG44H**	125	381	9.00 x 11.00 x 7.50	65	C4
150	**KDRG45H**	144	406	9.00 x 11.00 x 8.00	65	C4
200	**KDRJ41H**	192	466	9.00 x 11.00 x 9.00	70	C4
250	**KDRL46H**	242	472	11.38 x 15.00 x 11.00	110	C4
300	**KDRL47H**	289	490	11.38 x 15.00 x 11.00	110	C4
350	**KDRL48H**	336	539	11.38 x 15.00 x 11.00	110	C5

Specifications are subject to change without notice.

MOTOR PROTECTION FILTERS

V1000 KLC SERIES

The V1k®* filter is guaranteed by TCI to limit motor terminal voltage to 150% of bus voltage (peak input voltage) when applied to the output of a VFD and ahead of a motor connected with up to 2000 ft leads depending on carrier frequency and lead type and following the manufacturer's guidelines. The V1k filter must be sized at no more than 110% of the drive output current rating. Additional restrictions apply for multiple motor applications. Consult factory. The V1k filter must be sized to have regular line current loading of no less than 25% of its current rating. If the load has a potential for overhauling, the drive must be equipped with braking resistors or other features limiting bus voltage to no more than the level of the peak line voltage. The V1k filter must be wired no more than 12 feet from the drive.

The addition of a TCI®* V1k filter will help reduce motor heating, motor noise, and motor vibration by reducing the current harmonics in a drive system.

Peak voltages on a 460 volts system can reach 1200 to 1600 volts, causing rapid breakdown of motor insulation, leading to motor failure. On 575 volts systems, the peak voltages can easily reach 2100 volts. If this is left uncontrolled, insulation failure may occur. The same peak voltages that damage the motor can also damage the cable. Since the V1k filters are designed to be placed at the output of the drive, these units will also protect the cable runs.

Electrical Features:

- High performance
- Limits peak voltage
- Increases voltage rise time
- Reduce filter size
- Smaller mechanical layout
- Specific applications can reach 3000 feet (individual results may vary)
- Single motor or multiple motor
- Efficiency is greater than 98%
- UL and CUL listed

V1000 OPEN FILTER

Catalogue Number	Motor HP 480V	Motor HP 600V	Motor HP 240V	Rated Current	Dim. (in.) H" x W" x D"	Weight (lbs)	EX Model Cat. Number
V1K2A00	0.75	1	-	2	9.00 x 5.50 x 7.25	8	V1K2A00EX
V1K3A00	1 - 1.5	2	0.5	3	9.00 x 5.50 x 7.25	8	V1K3A00EX
V1K4A00	2	3	0.75	4	9.00 x 5.50 x 7.25	8	V1K4A00EX
V1K6A00	3	-	1 - 1.5	6	9.00 x 5.50 x 7.25	8	V1K6A00EX
V1K8A00	5	5	2	8	9.00 x 5.50 x 8.25	8	V1K8A00EX
V1K12A00	7.5	10	3	12	9.00 x 5.50 x 8.25	8	V1K12A00EX
V1K16A00	10	-	5	16	9.00 x 5.50 x 8.25	12	V1K16A00EX
V1K18A00	10	15	-	18	9.00 x 5.50 x 8.25	12	V1K18A00EX
V1K21A00	15	-	-	21	9.00 x 5.50 x 8.25	12	V1K21A00EX
V1K25A00	15	20	7.5	25	9.00 x 5.50 x 8.25	12	V1K25A00EX
V1K27A00	20	25	-	27	9.00 x 5.50 x 8.25	14	V1K27A00EX
V1K35A00	25	30	10	35	12.00 x 8.00 x 9.00	17	V1K35A00EX
V1K45A00	30	40	15	45	12.00 x 8.00 x 9.00	17	V1K45A00EX
V1K55A00	40	50	20	55	12.00 x 8.00 x 9.00	23	V1K55A00EX
V1K80A00	50 - 60	75	25 - 30	80	12.00 x 8.00 x 9.00	23	V1K80A00EX
V1K110A00	75	100	40	110	12.00 x 8.00 x 10.25	40	V1K110A00EX
V1K130A00	100	125	50	130	8.50 x 11.75 x 9.50	55	V1K130A00EX
V1K160A00	125	150	60	160	8.50 x 11.75 x 10.50	60	V1K160A00EX
V1K200A00	150	200	75	200	8.50 x 11.75 x 9.25	60	V1K200A00EX
V1K250A00	200	250	100	250	8.50 x 11.75 x 9.25	65	V1K250A00EX
V1K305A00	250	300	-	305	8.75 x 11.75 x 12.25	80	V1K305A00EX
V1K362A00	300	350	150	362	8.75 x 11.75 x 12.00	80	V1K362A00EX
V1K420A00	350	450	-	420	10.00 x 11.75 x 13.75	95	V1K420A00EX

Specifications are subject to change without notice.

Filtering increases Motor Life

The V1k® filter reduces common mode current by at least 30%. The V1k filter substantially slows down the rate of change of the PWM switching as seen by the load. The slowing of the rate of change of the PWM switching increases the capacitive coupling impedance between bearings and bearing races. The increase in capacitive coupling, in turn, reduces the damaging common mode currents and increases motor up-time. The V1k filter reduces bearing, pitting, and fluting.

*TCI and V1K are believed to be the trademarks or trade names of TCI, LLC and are not owned or controlled by Regal Beloit Corporation.

V1000 ENCLOSED FILTER

Catalogue Number	Motor HP 480V	Motor HP 600V	Motor HP 240V	Rated Current	Dim. (in.) H" x W" x D"	Weight (lbs)	EX* Model Cat. Number
V1K2A01	0.75	1	-	2	9.00 x 5.50 x 10.00	11	V1K2A01EX
V1K3A01	1 - 1.5	2	0.5	3	9.00 x 5.50 x 10.00	11	V1K3A01EX
V1K4A01	2	3	0.75	4	9.00 x 5.50 x 10.00	11	V1K4A01EX
V1K6A01	3	-	1 - 1.5	6	9.00 x 5.50 x 10.00	11	V1K6A01EX
V1K8A01	5	5	2	8	9.00 x 5.50 x 10.00	11	V1K8A01EX
V1K12A01	7.5	10	3	12	9.00 x 5.50 x 10.00	11	V1K12A01EX
V1K16A01	10	-	5	16	9.00 x 5.50 x 10.00	15	V1K16A01EX
V1K18A01	10	15	-	18	9.00 x 5.50 x 10.00	15	V1K18A01EX
V1K21A01	15	-	-	21	9.00 x 5.50 x 10.00	15	V1K21A01EX
V1K25A01	15	20	7.5	25	9.00 x 5.50 x 10.00	15	V1K25A01EX
V1K27A01	20	25	-	27	9.00 x 5.50 x 10.00	15	V1K27A01EX
V1K35A01	25	30	10	35	12.00 x 8.00 x 11.50	23	V1K35A01EX
V1K45A01	30	40	15	45	12.00 x 8.00 x 11.50	23	V1K45A01EX
V1K55A01	40	50	20	55	12.00 x 8.00 x 11.50	23	V1K55A01EX
V1K80A01	50 - 60	75	25 - 30	80	12.00 x 8.00 x 11.50	29	V1K80A01EX
V1K110A01	75	100	40	110	16.50 x 18.00 x 15.00	68	V1K110A01EX
V1K130A01	100	125	50	130	16.50 x 18.00 x 15.00	83	V1K130A01EX
V1K160A01	125	150	60	160	16.50 x 18.00 x 15.00	83	V1K160A01EX
V1K200A01	150	200	75	200	16.50 x 18.00 x 15.00	93	V1K200A01EX
V1K250A01	200	250	100	250	16.50 x 18.00 x 15.00	93	V1K250A01EX
V1K305A01	250	300	-	305	16.50 x 18.00 x 30.00	117	V1K305A01EX
V1K362A01	300	350	150	362	16.50 x 18.00 x 30.00	117	V1K362A01EX
V1K420A01	350	450	-	420	16.50 x 18.00 x 30.00	132	V1K420A01EX

V1k®* motor protecting output filters have been designed to limit peak voltage and increase voltage rise time. In specific applications, the V1k filter has performed with cable runs of up to 3,000 feet.

* Use the "EX" version of the filter under the following situations listed in the tables below:

Specifications are subject to change without notice.

FLEXIBLE ARMORED THHN CABLE - UNITS 35 AMPS AND BELOW

(kHz)	Cable Length			
(kHz)	100'	101'-500'	501'-1000'	>1000'
2	std.	std.	std.	√
4	std.	std.	std.	√
6	std.	std.	√	MtrGrd
8	std.	√	MtrGrd	MtrGrd

FLEXIBLE ARMORED THHN CABLE - UNITS 45 AMPS TO 420 AMPS

(kHz)	Cable Length			
(kHz)	100'	101'-500'	501'-1000'	>1000'
2	std.	std.	std.	√
4	std.	std.	std.	√
6	std.	std.	std.	√
8	std.	√	√	√

FLAT CABLE OR VFD CABLE - UNITS 35 AMPS AND BELOW

(kHz)	Cable Length			
(kHz)	100'	101'-500'	501'-1000'	>1000'
2	std.	std.	std.	√
4	std.	std.	√	MtrGrd
6	std.	std.	MtrGrd	MtrGrd
8	MtrGrd	MtrGrd	MtrGrd	MtrGrd

FLEXIBLE ARMORED THHN CABLE - UNITS 45 AMPS TO 420 AMPS

(kHz)	Cable Length			
(kHz)	100'	101'-500'	501'-1000'	>1000'
2	std.	std.	std.	√
4	std.	std.	√	MtrGrd
6	std.	std.	MtrGrd	MtrGrd
8	std.	MtrGrd	MtrGrd	MtrGrd

*TCI and V1K are believed to be the trademarks or trade names of TCI, LLC and are not owned or controlled by Regal Beloit Corporation.

OUTPUT DRIVE REACTORS

SYSTEM PROTECTION

OUTPUT FILTERS

KDR™* optimized drive reactors are used between the output of AC-PWM variable frequency drives and the motor, where the motor lead lengths are less than 100 feet.

The addition of the KDR unit to the output of a drive will dampen overshoot peak voltage, reduce motor heating and audible noise, helping to extend the life of the motor. The units also help prevent inverter instantaneous overcurrent trips because they provide needed inductance when the load on an inverter has an abnormally high capacitance.

The 100 foot guideline has been recommended because as motor leads become longer, the resonant frequency is lowered, and the magnitude and duration of the voltage spikes increases. Even though the addition of a KDR reactor can be beneficial, the addition of a reactor may be ineffective and potentially detrimental to system performance where motor lead lengths exceed 100 feet.

575 VOLTS OUTPUT

High "Z" units can be used in any application where traditionally a 5% impedance reactor would be applied.

HP	Catalogue Number	Dimensions (Inches)				Enclosure* Size
		Height	Width	Depth	Weight	
2	**KDRA31P**	4	4.18	4	4	C1
3	**KDRA35P**	4	4.18	4	4	C1
0	**KDRA33P**	4	4.18	4	4	C1
7.5	**KDRA34P**	4	4.18	4	4	C1
10	**KDRA36P**	4	4.18	4	5	C1
15	**KDRD31P**	6	7.2	4	10	C2
20	**KDRD32P**	6	7.2	4	10	C2
25	**KDRD35P**	6	7.2	4	10	C2
30	**KDRD33P**	6	7.2	4	12	C2
40	**KDRD34P**	6	7.2	4	12	C2
50	**KDRC31P**	5.75	7.2	5	15	C2
60	**KDRF31P**	7	9	6	25	C3
75	**KDRF32P**	7	9	6	25	C3
100	**KDRF33P**	7	9	6	30	C4
125	**KDRH31P**	9	11	7	40	C4
150	**KDRI31P**	9	11	7	50	C4
200	**KDRI32P**	9	11	7	45	C4
250	**KDRG31P**	9	11	7	60	C4
300	**KDRJ31P**	9	11	9	70	C5
350	**KDRJ32P**	9	11	9	70	C5

NEMA® 1 Metal Enclosure For KDR Reactors.

NEMA 1 Enclosures	Catalogue Number	KDR Suffix	Dimensions (Inches) Height x Width x Depth	Weight
	KLRCAB1	C1	6.50 x 8.00 x 6.00	4
	KLRCAB2	C2	7.50 x 10.00 x 7.00	6
	KLRCAB3	C3	9.00 x 12.00 x 8.00	12
	KLRCAB4	C4	15.50 x 15.00 x 13.00	35
	KLRCAB5	C5	18.50 x 20.00 x 16.00	50

*KDR is believed to be the trademark or trade name of TCI and is not owned or controlled by Regal Beloit Corporation.

NEMA is a trademark of National Electrical Manufacturers Association and is not owned or controlled by Regal Beloit Corporation.

STARTERS DIRECT-ON-LINE NEMA® 4X (IP65)

An ideal solution for starting many types of motors and pumps. These IP65 enclosed electro-mechanical starters are suitable for severe ambient conditions and provide superior protection against dust and water spray. They are available in both Start/Stop and Reset Only configurations.

General Characteristics:
Full-voltage starters in non-metallic enclosure are supplied complete with three-pole single-phase sensitive thermal overload relay.

Electrical Life:
500,000 cycles at the maximum rate of 600V cycles/hour

Certification and Compliance:
Enclosures M1 and M2 are CSA and cUL approved.
Enclosure M3 is cUL approved.

Order code **Stop/Start** for magnetic motor starters in non-metallic enclosure with 2 push buttons	Order code **Reset** for magnetic motor starters in non-metallic enclosure with 1 push	T/O RELAY ADJ RANGE	MAX UL/CSA HP RATINGS INDICATED ON STARTER (based on t/o relay adj range)					
			Single Phase		Three Phase			
		[A]	120V	240V	200V	240V	480V	600V
M1P009❶❷A4	M1R009❶❷A4	0.63 - 1	-	-	-	-	-	½
M1P009❶❷A5	M1R009❶❷A5	1 - 1.6	-	-	-	-	½	¾
M1P009❶❷A6	M1R009❶❷A6	1.6 - 2.5	-	-	½	½	1	1½
M1P009❶❷A7	M1R009❶❷A7	2.5 - 4	-	-	¾	¾	2	3
M1P009❶❷A8	M1R009❶❷A8	4 - 6.5	¼	½	1	1½	3	5
M1P009❶❷A9	M1R009❶❷A9	6.3 - 10	½	1½	2	3	5	7½
M1P009❶❷B0	M1R009❶❷B0	9 - 14	¾	2	3	3	5	7½
M1P012❶❷B0	M1R012❶❷B0	9 - 14	1	2	5	5	7½	10
M1P018❶❷B1	M1R018❶❷B1	13 - 18	1	3	5	5	10	15
M2P025❶❷B2	M2R025❶❷B2	17 - 23	1½	3	5	7½	15	15
M2P025❶❷B3	M2R025❶❷B3	20 - 25	2	3	7½	7½	15	15
M2P026❶❷B2	M2R026❶❷B2	17 - 23	1½	3	5	7½	15	20
M2P026❶❷B3	M2R026❶❷B3	20 - 25	2	5	7½	7½	15	20
M2P026❶❷B4	M2R026❶❷B4	24 - 32	2	5	7½	7½	15	20
M2P032❶❷B4	M2R032❶❷B4	24 - 32	3	7½	10	10	20	25
M25P038❶❷B5	M25R038❶❷B5	32 - 38	3	7½	10	15	30	30
M3P050❶❷B6❸	M3R050❶❷B6❸	35 - 50	3	10	10	15	30	40
M3P065❶❷B7❹	M3R065❶❷B7❹	46 - 65	-	-	15	15	40	60

NOTE: The HP / FLA values vary from one motor to another; if possible, always verify the HP and FLA (or rated current) on the motor nameplate.

❶ Complete the order code by indicating:
– 12 if required with three-phase motor
– 13 if required with single-phase motor

❷ Complete the order code by indicating coil voltage required:
– 02460 for 24V 60Hz
– 04860 for 48V 60Hz / 42V 50Hz
– 12060 for 120V 60Hz / 110V 50Hz
– 22060 for 220V 60Hz / 200V 50/60Hz
– 23060 for 230V 60Hz / 220V 50Hz
– 46060 for 460V 60Hz / 400V 50Hz
– 57560 for 575V 60Hz.

❸ Short circuit protective device – This enclosed starter is suitable for use on a circuit capable of delivering not more than 5,000rms symmetrical amperes, 600V max, when protected with Class RK5 type, Fuse size 200A.

❹ Maximum UL ratings is 52A for motor control and 65A for general use.

*Lovato is believed to be a trademark or trade name of Lovato Electric S.P. A. and is not owned or controlled by Regal Beloit Corporation.

NEMA is a trademark of National Electrical Manufacturers Association and is not owned or controlled by Regal Beloit Corporation.

Types of Motor Mounts

Rigid base is bolted, welded, or cast on main frame and allows motor to be rigidly mounted on equipment.

Resilient base has isolation or resilient rings between motor mounting hubs and base to absorb vibrations and noise. A conductor is imbedded in the ring to complete the circuit for grounding purposes.

NEMA® C face mount is a machined face with a pilot on the shaft end which allows direct mounting with a pump or other direct coupled equipment. Bolts pass through mounted part to threaded hole in the motor face.

NEMA D flange mount is a machined flange with rabbet for mountings. Bolts pass through motor flange to a threaded hole in the mounted part. NEMA C face motors are by far the most popular and most readily available. NEMA D flange kits are stocked by some manufacturers, including Regal.

Type M or N mount has special flange for direct attachment to fuel atomizing pump on an oil burner. In recent years, this type of mounting has become widely used on auger drives in poultry feeders.

Extended through-bolt motors have bolts protruding from the front or rear of the motor by which it is mounted. This is usually used on small direct drive fans or blowers.

NEMA is a trademark of National Electrical Manufacturers Association and is not owned or controlled by Regal Beloit Corporation.

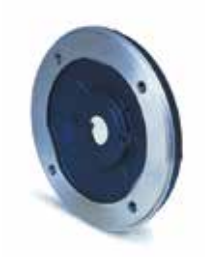

Accessories / Kits

NEMA® C Face Kits

Motor Accessories - Field Installed
LEESON® Steel Frame Motors

Includes parts to convert a rigid base mounted motor to NEMA® C face with base.
The C Face Kits cannot be used as replacements on a factory-produced C face motor.
For motors with Catalogue Numbers 092000 – 140999

NEMA® Frame	Enclosure	C Flange Kit Catalogue Number	App. Wgt. (lbs)	♥Notes
42	Open / Enclosed	**175661.00**	2	
48	Open / Enclosed	**175969.00**	2	A, (MX)
	Open / Enclosed	**175646.00**	2	B, (US)
S56	Open	**175000.00**	2	
	Open / Enclosed	**175297.00**	2	A, (MX)
	Open / Enclosed	**175647.00**	2	B, (US)
56	Open	**175075.00**	2	
	Open	**021247.25**	2	I
	Enclosed	**175076.00**	2	
	Enclosed	**021341.01**	2	I
	Enclosed	**LM24808**	2	G
	Enclosed	**LM24810**	2	H
143T-145T	Open	**175181.00**	2	
	Open	**021292.05**	2	I
	Enclosed	**175077.00**	2	
	Enclosed	**021343.01**	2	I
182T-184T	Open / Enclosed	**175691.00**	3	D
182T-184T Special	Open / Enclosed	**175294.00**	5	E
S213T	Open / Enclosed	**175693.00**	2	D
213T	Enclosed	**210TCFW**	17	J
213T-215T	Open	**175845.00**	19	
	Enclosed 4, 6, & 8-pole	**175844.00**	15	
213T-215T	ODP 2-pole	**175303.00**	15	F
	Enclosed 2-pole	**175304.00**	15	F

Specifications are subject to change without notice.

1) When changing a rigid mount motor to C Face motor, a non-NEMA BA dimension may result. For motor BA dimension information, please refer to the chart on the inside back cover flap of this catalogue.
2) Some larger HP 56-frame motors have larger shaft-end bearings and require a 143T-145T C Face kit.

♥Notes:
A For use with motors having "K" or "P" suffix on date code, manufactured in Mexico (MX)
B For motors manufactured after January 1, 2007, having a "B" suffix letter after the motor's date code, manufactured in the United States (US)
D Use this kit for 182-4T and S213T motors with Catalogue numbers 131454 and higher, or with a G prefix
E Converts a 182T-184T frame motor to the C-face dimensions of a 143T-145T or 182U-184U frame motor
F For use with 213T-215T 3600 RPM motors only
G For use with new 56 frame Industrial AG motors Catalogue # "117862.00, 117863.00,117864.00,117865.00 & 117866.00"
H For use with 56HZ Industrial AG motor 117867.00
I Factory mounted C-Flange, installed at your local Regal sales office, where applicable
J For use with catalogue #141427 and higher

NEMA is a trademark of National Electrical Manufacturers Association
and is not owned or controlled by Regal Beloit Corporation.

Accessories / Kits

NEMA® C Face Kits

Motor Accessories - Field Installed
LEESON® Cast Iron Motors

Includes parts to convert a rigid base mounted motor to NEMA® C face with base.
The C face kits cannot be used as replacements on a factory-produced C face motor.
For 15, G15 and 17 Series cast iron motors only

NEMA C Face Kits

NEMA® Frame	Enclosure	Catalogue Number	♥ Notes
143T-145T	Enclosed	**163116.00**	I
182T-184T	Enclosed	**175805.00**	I
	Open	**163046.00**	G
213T-215T	Open	**175066.01**	I
	Enclosed	**175068.01**	I
254T-256T	Open	**163018.00**	
	Enclosed	**163031.01**	I
284T/TS-286T/TS	Open	**163019.00**	I, J
	Enclosed	**163015.00**	I
324T/TS-326T/TS	Open	**163020.00**	G
	Open	**175454.00**	
	Enclosed	**163016.00**	
364T/TS-365T/TS	Open	**163021.00**	G
	Enclosed	**163017.00**	G
	Open	**175601.00**	H
	Enclosed	**175603.00**	H
404T/TS-405T/TS	Open	**163097.01**	
	Enclosed	**163033.01**	I
444T - 445T	Open	**163094.00**	I
	Enclosed	**163040.01**	I
444T-445TS	Enclosed 2-pole	**163124.00**	I
447T/TS-449T	Enclosed 4 & 6-pole	**163093.00**	I
	Enclosed 2-pole	**163127.00**	I

Specifications are subject to change without notice.

Green items are for premium efficient motors only.

When changing a rigid mount motor to C face motor, a non-NEMA BA dimension may result.
For motor BA dimension information, please refer to the chart on the inside back cover flap of this catalogue.

♥ Notes:
G Not for use with premium efficient motors.
H For 364T/TS -365T/TS frame motors built 2007 and later.
I Used with both EPACT and premium efficiency motors (15, G15 and 17 series).
J Not compatible with catalogue numbers 170050.00 and 170048.00.

NEMA is a trademark of National Electrical Manufacturers Association
and is not owned or controlled by Regal Beloit Corporation.

Accessories / Kits

NEMA® D Flange Kits - LEESON® Motors Only

Motor Accessories - Field Installed
Steel and Cast Iron Frame Motors

Includes parts to convert a rigid base mounted motor to NEMA® D face with base.
Shaded frame indicates cast iron motor kits for 15, G15 and 17 series motors.
NOTE: The D Flange Kits can only be used on rigid base motors. They will not fit NEMA C face motors.

NEMA® Frame	Enclosure	D Flange Kit Catalogue Number	App. Wgt. (lbs)	♥Notes
143T-145T	Enclosed	**163115.00**	6	
182T-184T	Open / Enclosed	**175694.00**	12	D
	Open	**175101.00**	13	G
	Enclosed	**175658.00**	12	G
	Enclosed	**175807.00**	14	
213T-215T	Open	**175114.00**	14	
	Enclosed	**175115.00**	14	
254T-256T	Open	**163027.01**	25	
	Enclosed	**163032.01**	25	
284T/TS-286T/TS	Open	**163028.01**	42	K
	Enclosed	**163024.01**	52	
324T/TS-326T/TS	Open	**163029.01**	57	G
	Enclosed	**163025.01**	57	
	Open	**175455.00**	57	
364T/TS-365T/TS	Open	**163044.01**	72	G
	Enclosed	**163034.01**	72	G
	Open	**175602.00**	72	H
	Enclosed	**175604.00**	72	H
404T/TS-405T/TS	Open 2, 4 & 6-pole	**163041.01**	90	
	Enclosed	**163045.01**	90	
444T/TS-445T/TS	Open 4 & 6-pole	**163077.00**	106	I
	Enclosed 4 & 6-pole	**163102.00**	106	I
	Enclosed 2-pole	**163125.00**	106	J
447T/TS-449T/TS	Enclosed 4 & 6-pole	**163104.00**	115	I
	Enclosed 2-pole	**163126.00**	115	J

Shaded frames are for cast iron motors.

Specifications are subject to change without notice.

Green items are for premium efficient motors only.

♥Notes:
D Use this kit for 182-4T and S213T motors with catalogue numbers 131454.00 and higher, or with a G prefix.
F For use with 213T-215T 3600 RPM motors only.
G Not for use with premium efficient motors.
H WATTSAVER®e II design built 2007 and later.
I For use with 1200 and 1800 RPM motors only.
J For use with 3450 RPM motors only.
K Not compatible with catalogue numbers 170050.00 and 170048.00.

NEMA is a trademark of National Electrical Manufacturers Association and is not owned or controlled by Regal Beloit Corporation.

Accessories / Kits

Drip-Cover Kits

For Drip-Proof Motors - LEESON® Motors Only

Each kit includes one drip-cover. Designed to protect drip-proof motors from rain, snow and ice when mounted outdoors in a vertical position.

Frame	Catalogue Number	App. Wgt. (lbs.)	♥ Notes
48-S56	**175003.00**	2	
	175298.00	2	A
56	**175004.00**	2	
143T-145T	**175792.00**	2	A
182T-184T	**175614.00**	3	
182T-184T	**175961.00**	3	
213T-215T	**175846.00**	12	
213T-215T	**175305.00**	12	F
213T-215T	**175962.00**	4	
254T-256T	**175963.00**	7	

Specifications are subject to change without notice.

Shaded frames are for cast iron motors.

♥Notes:
A For use with motors having "K" or "P" suffix on date code, manufactured in Mexico.
F For use with 213T-215T 3600 RPM motors only.

Rodent Screen Kits

NEMA® Frame	Enclosure	Catalogue Number	App. Wgt. (lbs.)
182T-184T	Open	**175872.00**	1
213T-215T	Open	**175871.00**	1
254T-256T	Open	**175873.00**	2
284T-286T	Open	**175874.00**	3
324T	Open	**175894.00**	5
326T	Open	**175875.00**	5

Shaded frames are for cast iron motors.

Specifications are subject to change without notice.
Wattsaver® "17" series rolled steel motors that have the suffix letter "M" in date code.

Severe Duty Conversion Kits

WATTSaver®e

For use with LEESON® Cast Iron Wattsaver®e motors and "17" series motors. Cast iron fan covers for cast iron motors. Designed to easily convert TEFC motors to all cast iron construction. All these motors have inert, corrosion resistant fiber filled thermoplastic fan as standard. Kit includes one cast iron fan cover.

NEMA Frame	IEC Frame	Catalogue Number	App. Wgt. (lbs.)
182T-184T	—	**175663.00**	10
213T-215T	—	**175050.00**	12
254T-256T	160	**175051.00**	18
284T-286T	180	**175052.00**	22
324T-326T	200	**175053.00**	29
364T-365T	225	**164136.00**	39
404T-405T	250	**175055.00**	49
444T-445T	280	**175056.00**	59
447T-449T	—	**175891.00**	112

Specifications are subject to change without notice.

NEMA is a trademark of National Electrical Manufacturers Association and is not owned or controlled by Regal Beloit Corporation.

LEESON®

Motor Accessories - Blower Fan Kits
Field Installed
LEESON® Motors Only

These kits are used for converting LEESON motors to totally enclosed blower cooled motors. Cooling per MG1.6 (IC46) The kits are designed for inverter and vector drive applications where continuous cooling is required regardless of motor shaft speed. The kit is mounted on the back of the motor after removing the fan guard and fan. Modifying the shaft is not required.

Blower Fan Kits

For use with Rolled Steel TEFC Motors only.

Blower Voltage	Blower Motor Phase	NEMA® Frame	Catalogue Number	CFM	App. Wt. (lbs.)
115	1	56-145T	**175775.00^**	115	4
115	1	182-4T	**175895.00♠**	115	4
115	1	213-5T	**175896.00♠**	235	5

Specifications are subject to change without notice.

^ For 56/145T motors having face mounted (plastic) fan guards.
♠ For rolled steel motors having the letter "M" after the date code.

Blower Fan Kits

For use with 150, G150 & 170 Series Cast Iron TEFC Motors only.

Blower Voltage	Blower Motor Phase	NEMA Frame	Catalogue Number	CFM	App. Wt. (lbs.)
115	1	182-4T	**175674.00**	260	10
115	1	213-5T	**175675.00**	260	11
115	1	254-6T	**175676.00**	260	17
115	1	284-6T	**175677.00**	500	24
115	1	324-6T	**175678.00**	500	28
230/460	3	360T	**175879.00**	500	35
230/460	3	360T	**176002.00 ◊**	500	35
230/460	3	400T	**175880.00**	500	45
230/460	3	444T/445T	**175558.00**	500	55

Specifications are subject to change without notice.

◊ Use with 360T frame motors built 2007 and later.

NEMA is a trademark of National Electrical Manufacturers Association
and is not owned or controlled by Regal Beloit Corporation.

Accessories / Kits

Encoder Kits - LEESON® Motors Only

Specifications:

These kits include the parts and encoder for field assembly of slim-line, through-shaft encoder designed to slip over the motor's fan end shaft. Blower kit sold separately.

Features:

- Output is 1024 pulses per revolution.
- 5 to 28 VDC line driver output. Short-circuit protection is standard. Inputs are over voltage and reverse voltage protected. Electrical noise immunity exceeds international standards. Encoders are isolated from shaft currents using hard anodized sleeves and non metallic anti-rotation hardware. Designed for long-life in industrial environments using an all-metal, shock resistant code disk. The encoder is protected by the motor's fan cover after mounting. Using a blower fan kit is suggested for proper motor cooling.
- Short circuit protection.
- Isolated from shaft currents.
- Shock resistant code disks.
- Use with blower kits to protect and cool motors.

Encoder Kits - Cast Iron Wattsaver® Motors

For use with 150, G150 & 170 series cast iron TEFC motors only.

NEMA® Frame	Catalogue Number
182-4T	**175684.00**
213-5T	**175685.00**
254-6T	**175686.00**
284-6T	**175687.00**
320T	**175641.00**
360T	**175642.00**
400T	**175643.00**
440T (2 pole)	**175644.00**
440T (4/6 pole)	**175645.00**

Specifications are subject to change without notice.

Encoder Kits

For use with rolled steel, TEFC motors only.

NEMA® Frame	Catalogue Number
56-145T	**175960.00**
182-4T	**175897.00**
213-5T	**175898.00**

Specifications are subject to change without notice.

Shaft Grounding Rings (SGRs)
For Use with CI Wattsaver® Motors "17" Series Shaft Grounding Ring (SGR)

For use with Leeson cast iron frame "17" series motors. Note - will not meet DIV 2 certification with SGRs. Shaft grounding is recommended (NEMA® MG1 31.4.4.3) as an effective means of bearing protection for motors operated from inverter power. One grounding device is adequate to bleed down inverter sourced shaft voltages, thereby protecting both bearings for motors as large as 6085 frame. Kits includes grounding ring, mounting hardware and instructions. Shaft ground rings fit these NEMA shaft extension frames listed below, they are designed to mount on the shaft end.

NEMA Frame	Motor Poles	Catalogue Number
182-184T	2-4	**176090.60**
213-5T	2-4-6	**176091.60**
254-6T	2-4-6	**176092.60**
284-6T/TS	2-4-6	**176093.60**
324-6T/TS	2-4-6	**176094.60**
364-5T/TS	2-4-6	**176095.60**

NEMA Frame	Motor Poles	Catalogue Number
404-5T/TS	2-4-6	**176096.60**
444-5T	4-6	**176097.60**
447-9T	4-6	**176098.60**

Specifications are subject to change without notice.

*Aegis is a trademark or trade name of Illinois Tool Works Inc. and is not owned or controlled by Regal Beloit Corporation.

NEMA is a trademark of National Electrical Manufacturers Association and is not owned or controlled by Regal Beloit Corporation.

Terminal block kits for 15 and 17 series NEMA® frame cast iron motors. Can also be used for replacement on 193 series cast iron and 192 series aluminum IEC metric motors.

NEMA® Frame	IEC Frame	Catalogue Number	App. Wgt. (lbs.)
—	63-90l	**175881.00≠**	1
180/210T	100/112/132	**175668.00**	2
250/280T	160/180	**175667.00**	3
320/360T	200/225	**175666.00**	4
400/440T	250/280	**175665.00**	5

Specifications are subject to change without notice.

≠ Replacement terminal board for aluminum frame IEC motors that end with "-00."

Accessories / Kits

Die Cast Aluminum Conduit Box Conversion Kit LEESON® Motors Only

56/140-frame kit (pictured) includes die cast aluminum conduit box, cover, gaskets, grounding screw, mounting hardware and adapter plate for mounting box on existing holes in motor. 180 and 210-frame kits include all parts required to replace the conduit box including the die cast conduit box, plug, cover, gaskets and mounting hardware. No adapter plate is required because these kits mount on existing holes. All conduit boxes have 1/2-NPT tapped lead exit holes on two adjacent sides with one hole plugged.
Note: the kit will not work with larger HP single-phase 210-frame motors.

Die Cast Aluminum Conduit Box

NEMA Frame	Catalogue Number	App. Wgt. (lbs.)
56-140T	**175892.00 ^**	2
182-4T	**175649.00 ***	2
213-5T	**175847.00 ***	11

Specifications are subject to change without notice.

^ - For use with motors having the letter "B" after the date code.
* - For use with motors having the letter "M" after the date code.

Ex-Proof Conduit Box

UL and CSA listed for Class I, Group C & D, and Class II, Groups E, F & G locations. Has grounding screw and all hardware provided. Mounts to motor by 3/4"-14NPT opening at rear of box. For NEMA 56 & 143-5T frame motors only. Box number 175755.00 has a 1" NPT thread.

Catalogue Number	App. Wgt. (lbs.)
175026.00	2
175755.00 (1)	2

Specifications are subject to change without notice.

(1) For motors having a letter P after the date code.

NEMA is a trademark of National Electrical Manufacturers Association and is not owned or controlled by Regal Beloit Corporation.

Motor Accessories

Adjustable Motor Bases - NEMA® 48-447T Frames

Heavy gauge steel mounting bases simplify the installation of motors and make the tensioning, maintenance and replacement of belts a simple efficient task. Fabricated from sheet or steel plate, then primed and finished in a gray rust and corrosion resistant oven-baked finish. Gussets and reinforcing channels on larger units and continuous welding on all units give these bases strength and durability for a long life. A single (215T frame and smaller) or double (NEMA 254T frame and larger) zinc plated adjusting screw is provided. Motor mounting bolts are included.

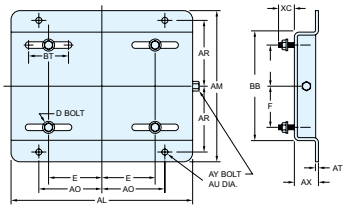

NEMA 48 thru 215T (-00)

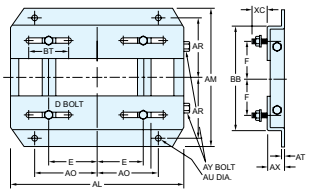

NEMA 254T thru 447T (-02)

Frame	Catalogue Number	AI	AM	AX	BB	E	F	AO	AR	AU**	BT	AT	XC	D* Bolt	AY Bolt	App. Wgt. (lbs.)
48	**41004800**	10	6¼	1⅛	4¼	2⅛	1⅜	3½	2¾	⅜	3	0.078	⅞	5/16x1	⅜x4	2
56	**41005600**	10⅝	6½	1⅛	4½	2 7/16	1½	31 3/16	2⅞	⅜	3	0.078	⅞	5/16x1	⅜x4	3
143T	**41014300**	10½	7½	1⅛	5½	2¾	2	3¾	3⅜	⅜	3	0.119	13/16	5/15x1	⅜x4	5
145T	**41014500**	10½	8½	1⅛	6½	2¾	2½	3¾	3⅞	⅜	3	0.119	13/16	5/15x1	⅜x4	6
182T	**41018200+**	12¾	9½	1½	6½	3¾	2¼	4½	4¼	½	3	0.134	1½	⅜x1¾	½x5	9
182T	**41018202**	12¾	9½	1½	6½	3¾	2¼	4½	4¼	½	3	0.134	1½	⅜x1¾	½x5	10
184T	**41018400+**	12¾	10½	1½	7½	3¾	2¾	4½	4¾	½	3	0.134	1½	⅜x1¾	½x5	9
184T	**41018402**	12¾	10½	1½	7½	3¾	2¾	4½	4¾	½	3	0.134	1½	⅜x1¾	½x5	10
213T	**41021300+**	15	11	1¾	7½	4¼	2¾	5¼	4¾	½	3½	0.164	1½	⅜x1¾	½x5	13
213T	**41021302**	15	11	1¾	7½	4¼	2¾	5¼	4¾	½	3½	0.164	1½	⅜x1¾	½x5	15
215T	**41021500+**	15	12½	1¾	9	4¼	3½	5¼	5½	½	3½	0.164	1½	⅜x1¾	½x5	15
215T	**41021502**	15	12½	1¾	9	4¼	3½	5¼	5½	½	3½	0.164	1½	⅜x1¾	½x5	17
254T	**41025402**	17¾	15⅛	2	10¾	5	4⅛	6¼	6⅝	⅝	4	3/16	1 7/16	½x1¾	⅝x6	17
256T	**41025602**	17¾	16⅞	2	12½	5	5	6¼	7½	⅝	4	3/16	1 7/16	½x1¾	⅝x6	18
284T	**41028402**	19¾	16⅞	2	12½	5½	4¾	7	7½	⅝	4½	3/16	11 1/16	½x2	⅝x6	21
286T	**41028602**	19¾	18⅜	2	14	5½	5½	7	8¼	⅝	4½	3/16	11 1/16	½x2	⅝x6	22
324T	**41032402**	22¾	19¼	2½	14	6¼	5¼	8	8½	¾	5¼	3/16	2 3/16	⅝x2½	¾x9	31
326T	**41032602**	22¾	20¾	2½	15½	6¼	6	8	9¼	¾	5¼	3/16	2 3/16	⅝x2½	¾x9	32
364T	**41036402**	25½	20½	2½	15½	7	5⅝	9	9⅛	¾	6	¼	2 1/16	⅝x2½	¾x9	44
365T	**41036502**	25½	21½	2½	16½	7	6⅛	9	9⅝	¾	6	¼	2 1/16	⅝x2½	¾x9	45
404T	**41040402**	28¾	22⅜	3	16½	8	6⅛	10	9⅞	⅞	7	¼	2½	¾x3	¾x11	60
405T	**41040502**	28¾	23⅞	3	18	8	6⅞	10	10⅝	⅞	7	¼	2½	¾x3	¾x11	61
444T	**41044402**	31¼	24⅝	3	19¼	9	7¼	11	11	⅞	7½	¼	2½	¾x3	¾x11	68
445T	**41044502**	31¼	26⅝	3	21¼	9	8¼	11	12	⅞	7½	¼	2½	¾x3	¾x11	73
447T	**41044702**	31¼	30⅛	3	24¾	9	10	11	13¾	⅞	7½	5/16	3	¾x3½	¾x11	92
449T	**41044902**	31¼	35⅛	3	24¾	9	12½	11	16¼	⅞	7½	5/16	3	¾x3½	¾x11	95

* Motor mounting bolt diameter and length, four supplied with each base.
** Base mounting bolts, four required—not supplied with base.
\+ Also available with B59 double adjustment.

Specifications are subject to change without notice.
NOTE: These bases are not suitable for vertical mounting.
All dimensions in inches.

Transition Bases

Transition bases compensate for the difference in mounting dimensions and shaft height of a rigid base NEMA T frame to the next higher NEMA U frame. This makes it possible, for example, to replace a 10 HP NEMA 254U frame motor with a 10 HP NEMA 215T frame motor without modifying the basic installation. Made of the same high-quality materials and construction as the adjustable motor bases above. They are for horizontal mountings, shimming may be needed for direct coupled loads. Thread size listed is for mounting transition base to the "T" frame motor. Dimensions listed are for one piece–two are supplied, one for each side of the motor's foot.

Converts T Frame	To U Frame	Catalogue Number	App. Wgt. (lbs.)	Height (Inches)	Width (Inches)	length (Inches)	Thread
143T/145T	182/184	**41181400**	2	1	2 1/4	7 1/2	5/16-18
182T/184T	213/215	**41211800**	3	3/4	1 3/4	9 1/2	3/8-16
213T/215T	254U/256U	**41252100**	5	1	2 7/16	12 3/4	3/8-16
254T/256T	284U/286U	**41282500**	8	3/4	2 3/4	14 1/4	1/2-13
284T/286T	324U/326U	**41322800**	10	1	3 1/4	15 3/4	1/2-13
324T/326T	364U/365U	**41363200**	13	1	3 11/16	16 1/2	5/8-11
364T/365T	404U/405U	**41403600**	22	1	4 1/4	18 5/8	5/8-11
404T/405T	444U/445U	**41444000**	24	1	4 1/4	21 5/8	3/4-10

Specifications are subject to change without notice.

Other base types and arrangements are available - please contact Regal Canada.

NEMA is a trademark of National Electrical Manufacturers Association and is not owned or controlled by Regal Beloit Corporation.

CUSTOMIZED AND MODIFIED PRODUCTS

CUSTOM MOTORS, GEARBOXES & GEARMOTORS

A leading designer and manufacturer of application-specific AC and DC motors and gearmotors in sub-fractional, fractional and integral horsepower sizes. We offer a database of over 30,000 custom designs, experienced application and design engineering teams, to ensure the best, most cost-effective custom motor solution.

CUSTOM MULTI-SPEED & LOW-SPEED MOTORS

Our PDQ Modular Production Program utilizes specially designed and standard components to make almost any imaginable NEMA® frame multi-speed or low-speed motor available when you need it. We pride ourselves on fast turnaround times on highly customized motors.

Custom motors include two, three and four-speed motors and speed ranges of 900, 720, 600, 450 and 300 RPMs. We also specialize in non-standard shaft designs.

For quotations, availability and application assistance, contact your local sales representative.

NEMA is a trademark of National Electrical Manufacturers Association and is not owned or controlled by Regal Beloit Corporation.

Multi-Speed and Modifications

	ENCLOSURE	ODP	TEFC	ODP	TEFC	ODP	TEFC	ODP	TEFC	ODP	TEFC	ODP	TEFC	ODP	TEFC	ODP	TEFC	ODP	TEFC	ODP	TEFC	ODP
	FRAME	56	56	143	143	145	145	182	182	184	184	213	213	215	215	254	254	256	256	284	284	286
CUSTOM & MULTI-SPEED MOTORS	Rolled steel	•	•	•	•	•	•	•	•	•	•	•	•	•	•							
	Cast iron						•	•	•	•	•	•	•	•	•	•	•	•	•	•	•	•
	2 Pole - MAX 200 HP	•	•	•	•	•	•	•	•	•	•	•	•	•	•	•	•	•	•	•	•	•
	4 Pole - MAX 350 HP	•	•	•	•	•	•	•	•	•	•	•	•	•	•	•	•	•	•	•	•	•
	6 Pole - MAX 250 HP	•	•	•	•	•	•	•	•	•	•	•	•	•	•	•	•	•	•	•	•	•
	8 Pole - MAX 200 HP	•	•	•	•	•	•	•	•	•	•	•	•	•	•	•	•	•	•	•	•	•
	10 Pole - MAX 60 HP	•	•	•	•	•	•	•	•	•	•	•	•	•	•	•	•	•	•	•	•	•
	12 Pole - MAX 40 HP	•	•	•	•	•	•	•	•	•	•	•	•	•	•	•	•	•	•	•	•	•
	16 Pole - MAX 30 HP	•	•	•	•	•	•	•	•	•	•	•	•	•	•	•	•	•	•	•	•	•
	2/4 Pole - 1 & 2 winding	•	•	•	•	•	•		•		•		•		•		•		•		•	
	4/12 Pole - 2 winding	•	•	•	•	•	•	•	•	•	•	•	•	•	•	•	•	•	•	•	•	•
	4/16 Pole - 2 winding	•	•	•	•	•	•	•	•	•	•	•	•	•	•	•	•	•	•	•	•	•
	4/6 Pole - 2 winding	•	•	•	•	•	•	•	•	•	•	•	•	•	•	•	•	•	•	•	•	•
	4/8 Pole - 1 & 2 winding	•	•	•	•	•	•	•	•	•	•	•	•	•	•	•	•	•	•	•	•	•
	6/12 Pole - 1 & 2 winding	•	•	•	•	•	•	•	•	•	•	•	•	•	•	•	•	•	•	•	•	•
	6/8 Pole - 2 winding	•	•	•	•	•	•	•	•	•	•	•	•	•	•	•	•	•	•	•	•	•
	8/16 Pole - 1 & 2 winding	•	•	•	•	•	•	•	•	•	•	•	•	•	•	•	•	•	•	•	•	•

	ENCLOSURE	ODP	TEFC	ODP	TEFC	ODP	TEFC	ODP	TEFC	ODP	TEFC	ODP	TEFC	ODP	TEFC	ODP	TEFC	ODP	TEFC	ODP	TEFC	ODP
	FRAME	56	56	143	143	145	145	182	182	184	184	213	213	215	215	254	254	256	256	284	284	286
STANDARD MODIFICATIONS	Auto overload	•	•	•	•	•	•	•	•	•	•	•	•	•	•							
	Bearings - spherical, rollier, angular contact											•	•	•	•	•	•	•	•	•	•	•
	Blower kits		•		•		•		•		•		•		•		•		•		•	
	Brakes - Stearns®* master distributor	•	•	•	•	•	•	•	•	•	•	•	•	•	•	•	•	•	•	•	•	•
	C flange	•	•	•	•	•	•	•	•	•	•	•	•	•	•	•	•	•	•	•	•	•
	Cast conduit box						•	•	•	•	•	•	•	•	•	•	•	•	•	•	•	•
	Cast fan hood				•		•		•		•		•		•		•		•		•	
	Class H insulation	•	•	•	•	•	•	•	•	•	•	•	•	•	•	•	•	•	•	•	•	•
	Class 1 division 2 - hazardous 1 - 200 HP				•		•		•		•		•		•		•		•		•	
	D flange				•		•	•	•	•	•	•	•	•	•	•	•	•	•	•	•	•
	Design D	•	•	•	•	•	•		•		•		•		•							
	Drip covers	•	•	•	•	•	•	•	•	•	•	•	•	•	•	•	•	•	•	•	•	•
	Dyno testing 3 - 150 HP 1800RPM							•	•	•	•	•	•	•	•	•	•	•	•	•	•	•
	Encoders	•	•	•	•	•	•	•	•	•	•	•	•	•	•	•	•	•	•	•	•	•
	Epoxy paints	•	•	•	•	•	•	•	•	•	•	•	•	•	•	•	•	•	•	•	•	•
	Explosion proof - minor mods 575V & 2x4V		•		•		•		•		•		•		•		•		•		•	
	Extra dips	•	•	•	•	•	•	•	•	•	•	•	•	•	•	•	•	•	•	•	•	•
	Frequency - 50Hz, 25 etc	•	•	•	•	•	•	•	•	•	•	•	•	•	•	•	•	•	•	•	•	•
	Fungus proofing	•	•	•	•	•	•	•	•	•	•	•	•	•	•	•	•	•	•	•	•	•
	Heaters	•	•	•	•	•	•	•	•	•	•	•	•	•	•	•	•	•	•	•	•	•
	IEEE 45 below deck		•		•		•		•		•		•		•		•		•		•	
	IEEE 841				•		•		•		•		•		•		•		•		•	
	Inpro/Seal®*				•		•	•	•	•	•	•	•	•	•	•	•	•	•	•	•	•
	Inverter rated insulation system	•	•	•	•	•	•	•	•	•	•	•	•	•	•	•	•	•	•	•	•	•
	No feet	•	•	•	•	•	•	•	•	•	•	•	•	•	•	•	•	•	•	•	•	•
	Oil seals	•	•	•	•	•	•	•	•	•	•	•	•	•	•	•	•	•	•	•	•	•
	Part Wind Start & Star-Delta	•	•	•	•	•	•	•	•	•	•	•	•	•	•	•	•	•	•	•	•	•
	Rolled steel construction	•	•	•	•	•	•	•	•	•	•	•	•	•	•	•	•	•	•	•	•	•
	Routine tests	•	•	•	•	•	•	•	•	•	•	•	•	•	•	•	•	•	•	•	•	•
	RTD's - bearing and winding - 100ohm PT															•	•	•	•	•	•	•
	Special wound voltage	•	•	•	•	•	•	•	•	•	•	•	•	•	•	•	•	•	•	•	•	•
	Spl. shafts - dimensions	•	•	•	•	•	•	•	•	•	•	•	•	•	•	•	•	•	•	•	•	•
	Spl. shafts - stainless steel	•	•	•	•	•	•	•	•	•	•	•	•	•	•	•	•	•	•	•	•	•
	Shaft grounding - current diverter ring				•		•	•	•	•	•	•	•	•	•	•	•	•	•	•	•	•
	Star-Delta start & part winding	•	•	•	•	•	•	•	•	•	•	•	•	•	•	•	•	•	•	•	•	•
	Thermistor - class F & H	•	•	•	•	•	•	•	•	•	•	•	•	•	•	•	•	•	•	•	•	•
	Thermocouples - various type	•	•	•	•	•	•	•	•	•	•	•	•	•	•	•	•	•	•	•	•	•
	Thermostat-nc & no class F & H	•	•	•	•	•	•	•	•	•	•	•	•	•	•	•	•	•	•	•	•	•
	Vertical mounting	•	•	•	•	•	•	•	•	•	•	•	•	•	•	•	•	•	•	•	•	•
	Vibration testing	•	•	•	•	•	•	•	•	•	•	•	•	•	•	•	•	•	•	•	•	•

*Stearns is believed to be the trademark or trade name of Rexnord Industries and is not owned or controlled by Regal Beloit Corporation.

*Inpro/Seal is believed to be the trademark or trade name of INPRPO/SEAL LLC and is not owned or controlled by Regal Beloit Corporation.

NEMA is a trademark of National Electrical Manufacturers Association and is not owned or controlled by Regal Beloit Corporation.

ISO Certified to 9001-2015

Whether you need a modified stock motor or a custom motor built to your specifications we can help.

Capabilities

- 56-449 T Frame
- Stator winding from 1-1/8" dia. by 1" length
- Explosion Proof mod shop
- Up to 350 HP @ 1800 rpm
- Short cycle times • 24hrs available
- Small lot capability

CustomPDQ | Think Fast
CUSTOM DESIGNED MOTORS

From Concept to Reality

Our Custom PDQ Team will work with you to design your particular application solution.

Contact Your Custom PDQ Team at:
1-800-463-1797

Steel Mill Roller | Custom Brakemotor | Internal Threaded Shaft Severe Duty | Public Transit Special Frame/Conduit Size | Pulp Dryer

1000V Mine Transportation Motor | High Torque Steel Mill Recovery Motor | Specially Encapsulated Motors and Seals | Bearing RTD Installation | Double Shaft with D Flange and 10' Leads

Anti-condensation heaters • Aux. conduit off C box • Bearings (special) • Brakemotors • Flanged • Certified CSA test facility • Class H insulation • Cooling tower spec • Couplings (shrunk on shaft) • D flange • Double shafts • Down-sized frames • Encoders (shaft mounted) • Epoxy & fungus-proofing • Extended leads • 50 hertz • High-efficiency • Fan Hoods • IEC frames • Ingro seals • Inverter duty • Inverter Rated Insulation Systems • Lead lugs • Low speed motors • Marine Duty (below deck) • Multi-speed motors • Non-standard voltages • Oversize T-box • Part-winding start • Precision balancing • Re-greaseable bearings • Round body • RTD's (winding & bearing) • Shaft up wall mount • Shafts -new/modified • TEAO/TENV enclosures • Thermistors • Thermocouples • Thermoguards • T.E. blower cooled • Tropicalization • TS shaft modification • Washdown

Anti-condensation heaters • Aux. conduit off C box • Bearings (special) • Brakemotors • Flanged • Certified CSA test facility • Class H insulation • Cooling tower spec • Couplings (shrunk on shaft) • D flange • Double shafts • Down-sized frames • Encoders (shaft mounted) • Epoxy & fungus-proofing • Extended leads • 50 hertz • High-efficiency • Fan Hoods • IEC frames • Ingro seals • Inverter duty • Inverter Rated Insulation Systems • Lead lugs • Low speed motors • Marine Duty (below deck) • Multi-speed motors • Non-standard voltages • Oversize T-box • Part-winding start • Precision balancing • Re-greaseable bearings • Round body • RTD's (winding & bearing) • Shaft up wall mount • Shafts -new/modified • TEAO/TENV enclosures • Thermistors • Thermocouples • Thermoguards • T.E. blower cooled • Tropicalization • TS shaft modification • Washdown

Anti-condensation heaters • Aux. conduit off C box • Bearings (special) • Brakemotors • Flanged • Certified CSA test facility • Class H insulation • Cooling tower spec • Couplings (shrunk on shaft) • D flange • Double shafts • Down-sized frames • Encoders (shaft mounted) • Epoxy & fungus-proofing • Extended leads • 50 hertz • High-efficiency • Fan Hoods • IEC frames • Ingro seals • Inverter duty • Inverter Rated Insulation Systems • Lead lugs • Low speed motors • Marine Duty (below deck) • Multi-speed motors • Non-standard voltages • Oversize T-box • Part-winding start • Precision balancing • Re-greaseable bearings • Round body • RTD's (winding & bearing) • Shaft up wall mount • Shafts -new/modified • TEAO/TENV enclosures • Thermistors • Thermocouples • Thermoguards • T.E. blower cooled • Tropicalization • TS shaft modification • Washdown

LEESON®

Cross Reference

Baldor®* to LEESON® Motors

Competitor Catalogue #	LEESON Motors Catalogue #	Exception Code(s) To LEESON Motors
1309-50	113903.00	
AFL3520A	111332.00	
AFL3521A	111333.00	
AFL3522A	120374.00	
AFL3523A	120375.00	
AFL3524A	120376.00	
AFL3525A	111949.00	
AFM3528	111334.00	
AFM3529	111335.00	
AFM3530	120377.00	
AFM3532	120379.00	
ANFL3501M	101435.00	
ANFL3504M	101436.00	
ANFL3507M	101437.00	
ANFL3510M	113302.00	
ANFL3514M	113301.00	
Baldor	096068.00	
BM3108	114162.00	
BM3112	114163.00	
BM3116	114164.00	
BM3154T	G120370.00	
BM3157T	G120371.00	
BM3248T	G131627.00	
BM3538	114150.00	
BM3539	114149.00	
BM3542	114147.00	
BM3543	114148.00	
BM3546	114146.00	
BM3546T	G121679.00	
BM3554	116767.00	
BM3554T	G120329.00	
BM3556T	G121050.00	
BM3558T	G120330.00	
BM3569	114151.00	
BM3611T	G131613.00	
BM3614T	G131620.00	
BM3615T	G131614.00	
BM3704T	G140601.00	
BM3710T	G140603.00	
BM3714T	G140636.00	
BM3730T	G140603.00	
CBM3546T	G121557.00	
CBM3554T	G121051.00	
CBM3558T	G121052.00	
CBM3611T	G131617.00	
CBM3615T	G131618.00	
CBM3710T	G140605.00	
CBM3714T	G140639.00	
CDP3410-V12	108045.00	F02
CDP3420-V12	108046.00	F02
CDP3420-V24	108050.00	F02
CDP3430-V12	108047.00	
CDP3430-V24	108051.00	F02
CDP3436	108019.00	F02
CDP3440-V12	108048.00	F02
CDP3440-V24	108052.00	F02

Competitor Catalogue #	LEESON Motors Catalogue #	Exception Code(s) To LEESON Motors
CDP3443	108016.00	F02
CDP3445	108022.00	F02
CDP3445-V12	108322.00	F02
CDP3445-V24	108053.00	F02
CDP3450	108020.00	F02
CDP3455	108023.00	F02
CDP3455	128023.00	
CDP3460	108021.00	F02
CDP3575	108092.00	F02
CDP3575	128000.00	
CDP3580	108265.00	F02
CDP3585	128010.00	
CDP3604	108502.00	
CDPSWD3410	109065.00	
CDPSWD3426	109070.00	
CDPSWD3430	109069.00	
CDPSWD3545	109075.00	
CDPSWD3555	109076.00	
CDPWD3310	108423.00	F02
CDPWD3320	108424.00	F02
CDPWD3326	108227.00	F02
CDPWD3330	108226.00	F02
CDPWD3440	108228.00	
CDPWD3445	108230.00	F02
CDPWD3455	108231.00	F02
CDPWD3575	108232.00	F02
CDPX3420	118015.00	F02
CDPX3426	118017.00	F02
CDPX3430	118016.00	F02
CDPX3436	118019.00	F02
CDPX3440	118018.00	F02
CECP83769T4	811550.00	
CEM2333T	171587.60	
CEM2333T	199060.00	
CEM2334T	171589.60	
CEM2334T	199062.00	
CEM2394T	171586.60	
CEM2394T	199059.00	
CEM2513T	199743.00	
CEM2514T	199744.00	
CEM2515T	199745.00	
CEM2516T	199746.00	
CEM2531T	199747.00	
CEM2535T	199749.00	
CEM2539T	199751.00	
CEM2547T	199755.00	
CEM2551T	199816.00	
CEM2555T	199759.00	
CEM3116T	121935.00	
CEM3154T	121675.00	
CEM3157T	121676.00	
CEM3158T	121928.00	
CEM3211T	132081.00	
CEM3211T	199735.00	
CEM3212T	132242.00	
CEM3212T	199736.00	
CEM3218T	132082.00	
CEM3218T	199737.00	
CEM3219T	132244.00	
CEM3219T	199738.00	
CEM3311T	140767.00	
CEM3311T	199739.00	
CEM3312T	141111.00	
CEM3312T	199740.00	
CEM3313T	140768.00	
CEM3313T	199741.00	
CEM3314T	141119.00	
CEM3314T	199742.00	

Competitor Catalogue #	LEESON Motors Catalogue #	Exception Code(s) To LEESON Motors
CEM3543T	199753.00	
CEM3546	116745.00	
CEM3546T	121179.00	
CEM3550T	121672.00	
CEM3554	116746.00	
CEM3554T	121180.00	
CEM3555T	121673.00	
CEM3558	116747.00	
CEM3558T	121181.00	
CEM3559T	121929.00	
CEM3610T	132079.00	
CEM3611T	131504.00	
CEM3613T	132080.00	
CEM3615T	131502.00	
CEM3660T	171564.60	
CEM3660T	199051.00	
CEM3661T	171565.60	
CEM3661T	199052.00	
CEM3663T	171446.60	
CEM3663T	199053.00	
CEM3664T	132243.00	
CEM36665T	171566.60	
CEM36665T	199054.00	
CEM3704T	140834.00	
CEM3709T	140770.00	
CEM3710T	140521.00	
CEM3714T	140522.00	
CEM3768T	171116.60	
CEM3769T	170166.60	
CEM3769T	199055.00	
CEM3770T	170165.60	
CEM3770T	199056.00	
CEM37711T	170168.60	
CEM37711T	199057.00	
CEM4103T	171591.60	
CEM4103T	199064.00	
CEM4104T	171592.60	
CEM4104T	199066.00	
CEM4106T	171588.60	
CEM4106T	199061.00	
CEM4107T	171590.60	
CEM4107T	199063.00	
CEM4108T	170108.60	
CEM4108T	199065.00	
CEM4109T	170110.60	
CEM4109T	199067.00	
CEM4110T	171593.60	
CEM4110T	199068.00	
CEM4114T	170112.60	
CEM4114T	199069.00	
CEM4115T	171594.60	
CEM4115T	199070.00	
CEM4198T	171591.60	
CEM4310T	170114.60	
CEM4310T	199071.00	
CEM4313T	171115.60	
CEM4313T	199073.00	
CEM4314T	171595.60	
CEM4314T	199072.00	
CEM4316T	171596.60	
CEM4316T	199074.00	
CEM4400T	171597.60	
CEM4400T	199076.00	
CEM7053T	825076.00	
CEM7054T	825077.00	
CEM7058T	825081.00	
CEM7059T	825078.00	
CEM7060T	825082.00	

Cross Reference Exception Codes

LEESON Product Construction Exceptions

C10 LEESON motor is capacitor start/induction run design

C15 LEESON motor is premium efficiency design

C47 LEESON motor is 208-230/460V

C55 LEESON motor has a solid-state switch

LEESON Product Frame Size Exceptions

F02 LEESON frame size is S56

F29 LEESON frame size is 56HC

This information is furnished as a guide only. Always check specific motor to determine suitability for direct replacement

*Baldor is believed to be the trademark or trade name of ABB ASEA Brown Boveri Ltd. and is not owned or controlled by Regal Beloit Corporation

Cross Reference

Baldor®* to LEESON® Motors

Competitor Catalogue #	LEESON Motors Catalogue #	Exception Code(s) To LEESON Motors
CEM7062T	825083.00	
CEM7063T	825080.00	
CEM7064T	825084.00	
CEM7170T	825075.00	
CEM7174T	825074.00	
CESSWDM3550T	121874.00	F02
CESSWDM3554T	121873.00	
CESSWDM3558T	121877.00	
CESSWDM3559T	121878.00	
CESSWDM3613T	132207.00	
CESSWDM3615T	132208.00	
CESSWDM3709T	140825.00	
CESSWDM3710T	140826.00	
CESSWDM3711T	140827.00	
CESSWDM3714T	140828.00	
CESWDM35554T	121912.00	
CESWDM3558T	121913.00	
CEWDBM3615T	G121618.00	
CEWDM3546T	121867.00	
CEWDM3558T	121868.00	
CEWDM3559T	121870.00	
CEWDM3611T	132198.00	
CEWDM3613T	132200.00	
CEWDM3615T	132201.00	
CEWDM3709T	141120.00	
CEWDM3710T	140822.00	
CEWDM3711T	140823.00	
CEWDM3714T	140821.00	
CFDL3501M	116485.00	
CFDL3504M	116486.00	
CFDL3507M	116487.00	
CFDL3516TM	121625.00	
CFM3156A	111147.00	
CFM3166A	111148.00	
CHC144A	100803.00	
CHC164A	100824.00	
CHC244A	100804.00	
CHC264A	100825.00	
CHC3413A	100803.00	
CHC3414A	100824.00	
CHC3416A	100804.00	
CHC3417A	100825.00	
CHC345A	111323.00	
CHC3524A	101645.00	
CHC3524A	111323.00	
CHC3525A	111321.00	
CHC3526A	111919.00	
CHC3528A	111322.00	
CHC364A	101645.00	
CHC365A	111321.00	
CHC445A	111324.00	
CHC465A	111266.00	
CHC545A	111267.00	
CJL3504A	113637.00	
CJL3507A	113638.00	
CJM3107	102199.00	
CJM3111	101776.00	
CJM3115	101775.00	
CJM3120	114203.00	
CJM3155	114202.00	
CJM3158	114201.00	
CJM3542	113028.00	
CL1301	103023.00	
CL1303	103024.00	
CL1304	101651.00	
CL1307	101650.00	
CL1310	113930.00	
CL1408TM	131629.00	

Competitor Catalogue #	LEESON Motors Catalogue #	Exception Code(s) To LEESON Motors
CL1408TM	131853.00	
CL1410TM	131630.00	
CL1430TM	131630.00	
CL3403	102916.00	F02
CL3405	102929.00	F02
CL3501	102930.00	F02
CL3503	102903.00	
CL3504	102907.00	
CL3506	112135.00	
CL3507	110905.00	
CL3509	110180.00	
CL3510	110908.00	
CL3513	110909.00	
CL3514	110910.00	
CL3515	113931.00	
CL3515T	121008.00	
CL3612TM	131633.00	
Cl3619TM	131631.00	
CL3711T	140695.00	
CL5001A	116606.00	
CM2333T	G150102.60	
CM2334T	G150080.60	
CM3104	100599.00	F02
CM3107	100600.00	F02
CM3108	100601.00	F02
CM3112	100602.00	
CM3116T	G121650.00	
CM3154T	121674.00	
CM3154T	G121651.00	
CM3155	114218.00	
CM3157T	G120275.00	
CM3211T	G130325.00	
CM3212T	G131249.00	
CM3218T	G130327.00	
CM3219T	G131250.00	
CM3311T	G140589.00	
CM3312T	G140692.00	
CM3313T	G140146.00	
CM3314T	G140693.00	
CM3534	102922.00	
CM3537	114142.00	
CM3538	102917.00	
CM3539	110914.00	
CM3541	110915.00	
CM3542	110916.00	
CM3543	116340.00	
CM3545	110181.00	
CM3546	110912.00	
CM3546T	121936.00	
CM3550	110917.00	
CM3550T	G121290.00	
CM3554	110918.00	
CM3554T	G121287.00	
CM3555	113927.00	
CM3555T	G121510.00	
CM3556T	G120428.00	
CM3557	114198.00	
CM3558T	G120276.00	
CM3559T	G120991.00	
CM3607T	116592.00	
CM3610T	G131899.00	
CM3611T	G130326.00	
CM3614T	G131497.00	
CM3615T	G130328.00	
CM3616T	G130990.00	
CM3660T	G151564.60	
CM3661T	G151565.60	
CM3663T	G151446.60	

Competitor Catalogue #	LEESON Motors Catalogue #	Exception Code(s) To LEESON Motors
CM3665T	G151566.60	
CM3704T	G140602.00	
CM3708T	G140482.00	
CM3709T	G131774.00	
CM3710T	G140183.00	
CM3711T	G140696.00	
CM3714T	G140147.00	
CM3769T	G150166.60	
CM3770T	G150165.60	
CM3771T	G150168.60	
CM3773T	G140697.00	
CM3774T	170167.60	C15
CM3774T	199058.00	
CM3774T	G150167.60	
CM4103T	G150081.60	
CM4104T	G150082.60	
CM4106T	G150079.60	
CM4107T	G150106.60	
CM4108T	G150108.60	
CM4109T	G150110.60	
CM4110T	G150083.60	
CM4114T	G150112.60	
CM4115T	G150084.60	
CM4310T	G150114.60	
CM4313T	G150115.60	
CM4314T	G150085.60	
CM4316T	G150086.60	
CM4400T	G151680.60	
CM7006A	114628.00	
CM7009A	114629.00	
CM7010A	114630.00	
CM7013	114631.00	
CM7014T	G121541.00	
CM7037T	G121182.00	
CM7053T	G850591.00	
CM7054T	G850621.00	
CM7056T	G850622.00	
CM7058T	G850623.00	
CM7059T	G850592.00	
CM7060T	G850624.00	
CM7062T	G850625.00	
CM7063T	G850593.00	
CM7064T	G850626.00	
CM7170T	G850620.00	
CM7174T	G850590.00	
CNM3538	102919.00	F02
CP4400T-4	LM32896	
CP4402T	LM14644	
CP4406T-4	LM32902	
CP4407T-4	LM32905	
CP4408T-4	LM14643	
CP4410T-4	LM32899	
CP44256T-4	LM15723	
CP44304T	LM14642	
CP44354T-4	LM14645	
CSSEWDM3537	117118.00	
CSSEWDM3538	117119.00	
CSSEWDM3541	117120.00	
CSSEWDM3542	117121.00	
CSSEWDM3544	117296.00	
CSSEWDM3545	117122.00	
CSSEWDM3546	117123.00	
CSSEWDM3550T	121879.00	
CSSEWDM3550T	121908.00	
CSSEWDM3554T	121880.00	
CSSEWDM3554T	121909.00	
CSSEWDM3555T	121881.00	
CSSEWDM3555T	121910.00	

*Baldor is believed to be the trademark or trade name of ABB ASEA Brown Boveri Ltd. and is not owned or controlled by Regal Beloit Corporation.

Cross Reference

Baldor®* to LEESON® Motors

Competitor Catalogue #	LEESON Motors Catalogue #	Exception Code(s) To LEESON Motors
CSSEWDM3558T	117299.00	
CSSEWDM3558T	121882.00	
CSSEWDM3558T	121911.00	
CSSSWDM3537	117118.00	
CSSSWDM3538	117119.00	
CSSSWDM3541	117120.00	
CSSSWDM3542	117121.00	
CSSSWDM3544	117296.00	
CSSSWDM3545	117122.00	
CSSSWDM3546	117123.00	
CSSSWDM3550T	121879.00	
CSSSWDM3550T	G121748.00	
CSSSWDM3554T	121880.00	
CSSSWDM3554T	G121749.00	
CSSSWDM3555T	121881.00	
CSSSWDM3555T	G121739.00	
CSSSWDM3558T	117299.00	
CSSSWDM3558T	121882.00	
CSSSWDM3558T	G121740.00	
CSSWDM3538	103387.00	F02
CSSWDM3538	103411.00	F02
CSSWDM3542	103388.00	F02
CSSWDM3542	103412.00	F02
CSSWDM3555T	G121812.00	
CSSWDM3559T	G121528.00	
CSSWDM3611T	G131900.00	
CSSWDM3613T	G131901.00	
CSSWDM3615T	G131902.00	
CSSWDM3709T	G140698.00	
CSSWDM3710T	G140675.00	
CSSWDM3711T	G140699.00	
CSSWDM3714T	G140676.00	
CSSWDN3554T	121875.00	
CSWDM3537	114560.00	
CSWDM3538	191204.00	
CSWDM3542	114561.00	
CSWDM3542	191207.00	
CSWDM3546	114562.00	
CSWDM3546	191291.00	
CSWDM3546T	121165.00	
CSWDM3558T	G191224.00	
CWDL3504	112527.00	C55
CWDL3507	112528.00	C55
CWDL3509	113583.00	C55
CWDL3510	112529.00	C55
CWDL3513	113584.00	C55
CWDL3514	113300.00	C55,F29
CWDM3537	113588.00	
CWDM3538	113586.00	
CWDM3539	115743.00	
CWDM3541	113589.00	
CWDM3542	113587.00	
CWDM3545	113590.00	
CWDM3554T	121871.00	
CWDM3558	112644.00	
CWDM3558T	121868.00	

Competitor Catalogue #	LEESON Motors Catalogue #	Exception Code(s) To LEESON Motors
CWDM3558T	G120588.00	
CWDM3559T	G120911.00	
CWDM3611T	G130664.00	
CWDM3613T	G131167.00	
CWDM3615T	G131171.00	
CWDM3616T	132199.00	
CWDM3616T	G132016.00	
CWDM3709T	G131165.00	
CWDM3710T	G140466.00	
CWDM3711T	G140700.00	
CWDM3713T	G140701.00	
CWDM3714T	G140464.00	
CWSSWDM3610T	132206.00	
DGC1301M	191742.00	
DGC1304M	100802.00	
DGC1307M	113642.00	
ECP2276T	171636.60	
ECP2276T	LM16656	
ECP2276T-4	199011.00	
ECP2294T	171620.60	
ECP2332T	171637.60	
ECP2332T-4	199014.00	
ECP2333T	171632.60	
ECP2333T	LM32873	
ECP2333T-4	199016.00	
ECP2334T	171633.60	
ECP2334T	LM32876	
ECP2334T-4	199019.00	
ECP2394T-4	199015.00	
ECP3581T	LM32856	
ECP3582T	LM32587	
ECP3661T	171623.60	
ECP3661T	LM16644	
ECP3661T-4	199004.00	
ECP3663T	LM32864	
ECP3664T	171634.60	
ECP3665T	171630.60	
ECP3665T	LM16650	
ECP3665T4	171630.60	
ECP3764T	171634.60	
ECP3764T-4	199005.00	
ECP3768T	171635.60	
ECP3768T	LM32867	
ECP3768T-4	199008.00	
ECP3769T	171616.60	
ECP3769T-4	199009.00	
ECP3770T	171622.60	
ECP3770T	LM32869	
ECP3770T-4	199010.00	
ECP3771T	171617.60	
ECP3771T-4	199012.00	
ECP3774T	171631.60	
ECP3774T	LM16919	
ECP3774T-4	199013.00	
ECP4100T	171638.60	
ECP4100T	LM32874	
ECP4100T-4	199017.00	
ECP4102T	171639.60	
ECP4102T	LM32877	
ECP4102T-4	199020.00	
ECP4103T	171779.60	
ECP4103T	LM32879	
ECP4103T-4	199022.00	
ECP4104T	171782.60	
ECP4104T	LM32882	
ECP4104T-4	199025.00	
ECP4106T	171621.60	
ECP4106T-4	199018.00	

Competitor Catalogue #	LEESON Motors Catalogue #	Exception Code(s) To LEESON Motors
ECP4107T-4	199021.00	
ECP4108T	171781.60	
ECP4108T-4	199024.00	
ECP4109T	171784.60	
ECP4109T-4	199027.00	
ECP4110T	171785.60	
ECP4110T-4	199028.00	
ECP4111T	171780.60	
ECP4111T-4	199023.00	
ECP4114T	LM32685	
ECP4114T-4	199030.00	
ECP4115T	171788.60	
ECP4115T	LM32887	
ECP4115T-4	199031.00	
ECP4117T	171783.60	
ECP4117T-4	199026.00	
ECP4308T	171786.60	
ECP4308T-4	199029.00	
ECP4310T	171790.60	
ECP4310T-4	199033.00	
ECP4312T	171789.60	
ECP4312T	LM32888	
ECP4312T-4	199032.00	
ECP4313T	171793.60	
ECP4313T-4	199036.00	
ECP4314T	171791.60	
ECP4314T-4	199034.00	
ECP4316T	171794.60	
ECP4316T	LM32893	
ECP4316T-4	199037.00	
ECP4400T-4	199040.00	
ECP4402T	171796.60	
ECP4402T	LM32895	
ECP4402T-4	199039.00	
ECP4403T	171792.60	
ECP4403T-4	199035.00	
ECP4404T	171795.60	
ECP4404T-4	199038.00	
ECP4406T-4	171803.60	
ECP4406T-4	199046.00	
ECP4407T-4	171806.60	
ECP4407T-4	199049.00	
ECP4409T-4	171798.60	
ECP4409T-4	199041.00	
ECP4410T-4	171800.60	
ECP4410T-4	199043.00	
ECP4411T-4	171801.60	
ECP4411T-4	199044.00	
ECP4412T-4	171799.60	
ECP4413T-4	171802.60	
ECP44156T-4	171804.60	
ECP4416T-4	171805.60	
ECP44206T-4	171807.60	
ECP44206T-4	199050.00	
ECP64314T-4	811567.00	
ECP82333T-4	811555.00	
ECP82334T-4	811557.00	
ECP82394T-4	811554.00	
ECP83581T-4	811541.00	
ECP83583t-4	811542.00	
ECP83584T-4	811543.00	
ECP83586T-4	811544.00	
ECP83587T-4	811545.00	
ECP83660T	811546.00	
ECP83661T	811547.00	
ECP83663T	811548.00	
ECP83665T-4	811549.00	
ECP83769T-4	811550.00	

Cross Reference Exception Codes

LEESON Product Construction Exceptions

C10 LEESON motor is capacitor start/induction run design
C15 LEESON motor is premium efficiency design
C47 LEESON motor is 208-230/460V
C55 LEESON motor has a solid-state switch

LEESON Product Frame Size Exceptions

F02 LEESON frame size is S56
F29 LEESON frame size is 56HC

This information is furnished as a guide only. Always check specific motor to determine suitability for direct replacement

*Baldor is believed to be the trademark or trade name of ABB ASEA Brown Boveri Ltd. and is not owned or controlled by Regal Beloit Corporation

Cross Reference

Baldor®* to LEESON® Motors

Competitor Catalogue #	LEESON Motors Catalogue #	Exception Code(s) To LEESON Motors
ECP83770T-4	811551.00	
ECP83774T-4	811553.00	
ECP8377IT-4	811552.00	
ECP84103T-4	811559.00	
ECP84104T-4	811561.00	
ECP84106T-4	811556.00	
ECP84107T-4	811558.00	
ECP84108T-4	811560.00	
ECP84109T-4	811562.00	
ECP84110T-4	811563.00	
ECP84114-T	811564.00	
ECP84115T-4	811564.00	
ECP84310T-4	811566.00	
ECP84313T-4	811568.00	
ECP84400T-4	811571.00	
ECP84402T-4	811570.00	
ECP94316T-4	811569.00	
EFM2513T	199699.00	
EFM2515T	199702.00	
EFM2531T	199705.00	
EFM2535T	199708.00	
EFM2539T	199711.00	
EFM2543T	199714.00	
EFM2547T	199717.00	
EFM3211T	G131240.00	
EFM3218T	199007.00	
EFM3218T	G131239.00	
EFM3311T	199693.00	
EFM3311T	G140609.00	
EFM3313T	199696.00	
EJMM2333T	199976.00	
EJMM2334T	199978.00	
EJMM2394T	199975.00	
EJMM2513T	199964.00	
EJMM2514T	199965.00	
EJMM2534T	199969.00	
EJMM2535T	199970.00	
EJMM2538T	199971.00	
EJMM2539T	199972.00	
EJMM2542T	199973.00	
EJMM2543T	199974.00	
EJMM3116T	122115.00	
EJMM3211T	199589.00	
EJMM3212T	199763.00	
EJMM3218T	199590.00	
EJMM3219T	199765.00	
EJMM3311T	199775.00	
EJMM3312T	199090.00	
EJMM3313T	199777.00	
EJMM3314T	199091.00	
EJMM3546T	122083.00	
EJMM3550T	122085.00	
EJMM3554T	122087.00	
EJMM3555T	122089.00	
EJMM3558T	122091.00	
EJMM3559T	199766.00	
EJMM3611T	199767.00	
EJMM3613T	199768.00	
EJMM3615T	199769.00	
EJMM3616T	199769.00	
EJMM3616T	199779.00	
EJMM3709T	199780.00	
EJMM3711T	199781.00	
EJMM3714T	199782.00	
EJMM4103T	199980.00	
EJMM4104T	199982.00	
EJMM4106T	199977.00	
EJMM4107T	199979.00	

Competitor Catalogue #	LEESON Motors Catalogue #	Exception Code(s) To LEESON Motors
EJMM4108T	199981.00	
EJMM4109T	199983.00	
EJMM4110T	199984.00	
EJMM4114T	199985.00	
EJMM4115T	194127.00	
EJMM4115T	199986.00	
EJPM2334T	194119.00	
EJPM2394T	199998.00	
EJPM2513T	199987.00	
EJPM2514T	199988.00	
EJPM2515T	199989.00	
EJPM2516T	199990.00	
EJPM2531T	199991.00	
EJPM2534T	199992.00	
EJPM2535T	199993.00	
EJPM2538T	199994.00	
EJPM2539T	199995.00	
EJPM2542T	199996.00	
EJPM2543T	199997.00	
EJPM3312T	199784.00	
EJPM3313T	199785.00	
EJPM3314T	199786.00	
EJPM3714T	199789.00	
EJPM4103T	194121.00	
EJPM4104T	194123.00	
EJPM4106T	194118.00	
EJPM4107T	194120.00	
EJPM4108T	194122.00	
EJPM4109T	194124.00	
EJPM4110T	194125.00	
EJPM4114T	194126.00	
EL1307	101544.00	F02
EL1310	113630.00	
EL1408T	131851.00	
EM2276T	170122.60	
EM2332T	170123.60	
EM2333T	170066.60	
EM2334T	170007.60	
EM2394T	170062.60	
EM2506T	199694.00	
EM2511T	199697.00	
EM2514T	199701.00	
EM2516T	199704.00	
EM2524T	199700.00	
EM2528T	199703.00	
EM2532T	199706.00	
EM2534T	199707.00	
EM2536T	199709.00	
EM2538T	199710.00	
EM2540T	170147.60	
EM2540T	199712.00	
EM2542T	199713.00	
EM2544T	170148.60	
EM2544T	199715.00	
EM2546T	199716.00	
EM2548T	199718.00	
EM2549T	199719.00	
EM2550T	199722.00	
EM2551T	199720.00	
EM2552T	199721.00	
EM2554T-4	199725.00	
EM2555T	199723.00	
EM2556T-4	199728.00	
EM2557T-4	170155.60	C47
EM2557T-4	170259.60	
EM2557T-4	199727.00	
EM2558T-4	171522.60	
EM2558T-4	199729.00	

Competitor Catalogue #	LEESON Motors Catalogue #	Exception Code(s) To LEESON Motors
EM2560T-4	171576.60	
EM2560T-4	199730.00	
EM2562T-4	171573.60	
EM2562T-4	199731.00	
EM2563T-4	171523.60	
EM2563T-4	199732.00	
EM2564T-4	171577.60	
EM2564T-4	199733.00	
EM2583T-4	170255.60	
EM2583T-4	199724.00	
EM3115	116128.00	
EM3116T	121003.00	
EM3120T	121514.00	
EM3154T	121004.00	
EM3155T	121515.00	
EM3156T	121517.00	
EM3157T	121005.00	
EM3158T	121516.00	
EM3207T	131971.00	
EM3207T	199685.00	
EM3211T	131519.00	
EM3211T	199687.00	
EM3212T	199689.00	
EM3215T	131972.00	
EM3218T	131520.00	
EM3218T	199690.00	
EM3219T	131988.00	
EM3219T	199692.00	
EM32IIT-8	LM33056	
EM3305T	199688.00	
EM3309T	199691.00	
EM3311T	140470.00	
EM3312T	140753.00	
EM3313T	140472.00	
EM3314T	140754.00	
EM3314T	199698.00	
EM3545	116129.00	
EM3546	116757.00	
EM3546T	120921.00	
EM3546T-5	120122.00	
EM3546T-5	121937.00	
EM3550	116758.00	
EM3550T	121518.00	
EM3550T-5	121939.00	
EM3554	116759.00	
EM3554T	120922.00	
EM3554T-5	121940.00	
EM3555	116760.00	
EM3555T	121519.00	
EM3555T-5	121941.00	
EM3556T	121520.00	
EM3556T-5	121938.00	
EM3558T	120923.00	
EM3581T	171640.60	
EM3582T	171643.60	
EM3583T	171642.60	
EM3584T	171646.60	
EM3586T	171648.60	
EM3587T	171647.60	
EM3607T-5	132251.00	
EM3610T	131985.00	
EM3610T	199003.00	
EM3611T	131463.00	
EM3611T-5	132253.00	
EM3613T	131987.00	
EM3613T	199006.00	
EM3613T-5	132254.00	
EM3614T	131981.00	

*Baldor is believed to be the trademark or trade name of ABB ASEA Brown Boveri Ltd. and is not owned or controlled by Regal Beloit Corporation.

Cross Reference

Baldor®* to LEESON® Motors

Competitor Catalogue #	LEESON Motors Catalogue #	Exception Code(s) To LEESON Motors
EM3614T	199002.00	
EM3614T-5	132252.00	
EM3615T	131464.00	
EM3615T-5	132255.00	
EM3661T	171320.60	
EM3665T	171322.60	
EM3667T	199001.00	
EM3709T	140756.00	
EM3710T	140450.00	
EM3710T-5	141116.00	
EM3711T	140755.00	
EM3714T	140451.00	
EM3714T-5	170212.60	
EM3764T	171378.60	
EM3768T	171379.60	
EM3769T	170158.60	
EM3770T	170157.60	
EM3771T	170159.60	
EM3774T	170140.60	
EM4100T	170068.60	
EM4102T	170001.60	
EM4103T	170011.60	
EM4104T	170015.60	
EM4106T	170033.60	
EM4107T	170035.60	
EM4108T	170037.60	
EM4109T	170039.60	
EM4110T	170019.60	
EM4111T	170003.60	
EM4114T	170041.60	
EM4115T	170023.60	
EM4117T	170005.60	
EM4308T	170096.60	
EM4310T	170043.60	
EM4312T	170097.60	
EM4313T	170045.60	
EM4314T	170027.60	
EM4316T	170031.60	
EM4400T	170087.60	
EM4402T-4	170160.60	
EM4403T	170098.60	
EM4404T	170099.60	
EM4406T-4	170371.60	
EM4407TR-4	170352.60	
EM4409T-4	170256.60	
EM4410T-4	170369.60	
EM4411T-4	170260.60	
EM4412T-4	171580.60	
EM4412T-4	199042.00	
EM4413T-4	171578.60	
EM4413T-4	199045.00	
EM44156T-4	171315.60	
EM4416T-4	171579.60	C15
EM4416T-4	199048.00	
EM44206T	171316.60	
EM7037T	121917.00	

Competitor Catalogue #	LEESON Motors Catalogue #	Exception Code(s) To LEESON Motors
EM7053T	825092.00	
EM7054T	825093.00	
EM7056T	825095.00	
EM7058T	825097.00	
EM7059T	825094.00	
EM7060T	825099.00	
EM7062T	825101.00	
EM7063T	825096.00	
EM7064T	825103.00	
EM7066T	825105.00	
EM7067T	825100.00	
EM7068T	825107.00	
EM7075T	121918.00	
EM7081T	825102.00	
EM7083T	825098.00	
EM7142T	825085.00	
EM7144T	825087.00	
EM7145T	825088.00	
EM7147T	825089.00	
EM7170T	825091.00	
EM7172T	825086.00	
EM7174T	825090.00	
EM74154T	825113.00	
EM74204T	825115.00	
EMM2333	193316.60	
EMM2334	193319.60	
EMM3559	192209.00	
EMM3611	193301.60	
EMM3613	193306.60	
EMM3615	193307.60	
EMM3709	193309.60	
EMM3710	193310.60	
EMM3711	193312.60	
EMM3714	193313.60	
EMM4103	193322.60	
EMM4104	193325.60	
EMM4110	193328.60	
EMM5700	192208.00	
EMM5700-5	192231.00	
EMM5750	192205.00	
EMM5750-5	192232.00	
EWDM3558T	121866.00	
EWDM3611T	132196.00	
EWDM3615T	132197.00	
EWDM3710T	140819.00	
EWDM3714T	140820.00	
FDL3501M	113256.00	
FDL3501M	M002256.00	
FDL3504M	110086.00	
FDL3504M	M009086.00	
FDL3507M	110087.00	
FDL3507M	M009087.00	
FDL3510TM	121569.00	
FDL3510TM	M009088.00	
FDL3510TM	M009089.00	
FDL3514TM	M009089.00	
FDL3516TM	110090.00	
FDL3610TM	131542.00	
FDL3611TM	131541.00	
FDL3612TM	131543.00	
FDL3619TM	131542.00	
FDL3712TM	140414.00	
FDL3731M	140203.00	
FDL3733TM	140130.00	
FDL3733TM	140707.00	
FDL3737TM	140414.00	
FDL3737TM	140706.00	
FM3211T	G131240.00	

Competitor Catalogue #	LEESON Motors Catalogue #	Exception Code(s) To LEESON Motors
FM3218T	G131239.00	
FM3311T	G140609.00	
FM3611T	G131237.00	
FM3615T	G131236.00	
FM3710T	G140604.00	
GDM2333T	171841.60	
GDM2334T	171842.60	
GDM3611T	171845.60	
GDM3615T	171846.60	
GDM3710T	171847.60	
GDM3714T	171848.60	
GDM4103T	171843.60	
GDM4104T	171844.60	
GLP3330	096049.00	
GLP3332	096050.00	
GLP3336	096051.00	
GMP3330	096013.00	
GMP3332	096014.00	
GMP3336	096015.00	
GMP3338	096016.00	
GPP12503	M1125004.00	
GPP12545	M1125072.00	
GPP12547	M1125070.00	
GPP231108	M1115001.00	
GPP231109	M1115002.00	
GPP232110	M1115000.00	
GPP233111	M1115028.00	
GPP233112	M1115027.00	
GPP233120	M1125048.00	
GPP233121	M1125036.00	
GPP7451	M1135116.00	
GPP7452	M1135112.00	
GPP7453	M1135111.00	
GPP7454	M1135114.00	
GPP7455	M1135110.00	
GPP7456	M1135108.00	
GPP7457	M1135117.00	
GPP7458	M1135107.00	
GPP7459	M1135106.00	
GPP7460	M1135109.00	
GPP7461	M1135115.00	
GPP7470	M1135150.00	
GPP7471	M1135149.00	
GPP7472	M1135148.00	
GPP7473	M1135147.00	
GPP7474	M1135146.00	
GPP7475	M1135145.00	
GPP7476	M1135143.00	
GPP7477	M1135141.00	
GPP7478	M1135140.00	
GPP7479	M1135139.00	
GSL3509M	111330.00	
HM3112	100030.00	
HM3116	115827.00	
HM3154	115825.00	
HM3157	115826.00	
HM3218TA	G130565.00	
IDGMP2500	096070.00	
IDGMP2501	096069.00	
IDGMP2503	096068.00	
IDGMP2505	096067.00	
IDM4102T	810001.00	
IDM4103T	810011.00	
IDM4104T	810015.00	
IDM4110T	810019.00	
IDM4115T	810023.00	
IDM4117T	810005.00	
IDM4312T	810097.00	

Cross Reference Exception Codes

LEESON Product Construction Exceptions

C10 LEESON motor is capacitor start/induction run design
C15 LEESON motor is premium efficiency design
C47 LEESON motor is 208-230/460V
C55 LEESON motor has a solid-state switch

LEESON Product Frame Size Exceptions

F02 LEESON frame size is S56
F29 LEESON frame size is 56HC

This information is furnished as a guide only. Always check specific motor to determine suitability for direct replacement

*Baldor is believed to be the trademark or trade name of ABB ASEA Brown Boveri Ltd. and is not owned or controlled by Regal Beloit Corporation

Cross Reference

Baldor®* to LEESON® Motors

Competitor Catalogue #	LEESON Motors Catalogue #	Exception Code(s) To LEESON Motors
IDM4314T	810027.00	
IDM4316T	810031.00	
IDM4400T-4	810087.00	
IDM4404T	810099.00	
IDM4406T-4	811371.00	
IDM4407T-4	810503.00	
IDM4409T-4	811367.00	
IDM4410T-4	811369.00	
IDNM2333T	810066.00	
IDNM3581T	810548.00	
IDNM3587T	810546.00	
IDNM3661T	811320.00	
IDNM3665T	811322.00	
IM3540A	111304.00	
IR3507M	114932.00	
JL1303A	100207.00	
JL1303A	101527.00	
JL1306A	100208.00	
JL1306A	101528.00	
JL1307A	100723.00	
JL1309A	100723.00	
JL1309A	101529.00	
JL1313A	110292.00	
JL1313A	113687.00	
JL1317A	110293.00	
JL1323A	110286.00	
JL325A	100207.00	
JL3503A	113955.00	
JL3506A	113956.00	
JL3509A	113639.00	
JL3513A	113640.00	
JL3515A	113641.00	
JL425A	100208.00	
JL5003A	116188.00	
JL5006A	116186.00	
JL5009A	116185.00	
JL5030	116183.00	
JL5031	116181.00	
JL525A	100723.00	
JL625A	110292.00	
JL725A	110293.00	
JL825A	110286.00	
JM225	102197.00	
JM3006	102197.00	
JM3107	102198.00	
JM3111	101637.00	
JM3115	101638.00	
JM3120	113891.00	
JM3155	113892.00	
JM3158	113893.00	
JM3460	114931.00	
JM3463	114208.00	
JM3545	114207.00	
JM3550	114206.00	
JM3555	114205.00	
JM3559	114204.00	
JM625	113891.00	
JML1406T	131640.00	
JML1408T	131604.00	
JML1409T	131641.00	
JML1509T	140642.00	
JML1510T	140665.00	
JML1512T	140666.00	
JMM2333T	151568.60	
JMM2334T	151570.60	
JMM2394T	151567.60	
JMM2513T	G151361.60	
JMM3116T	121850.00	

Competitor Catalogue #	LEESON Motors Catalogue #	Exception Code(s) To LEESON Motors
JMM3154T	121851.00	
JMM3155T	121853.00	
JMM3157T	121852.00	
JMM3158T	121854.00	
JMM3211T	131562.00	
JMM3212T	131574.00	
JMM3218T	131563.00	
JMM3219T	131576.00	
JMM3311T	140618.00	
JMM3312T	131577.00	
JMM3313T	140619.00	
JMM3314T	151380.60	
JMM3546T	121855.00	
JMM3550T	121858.00	
JMM3554T	121856.00	
JMM3555T	121859.00	
JMM3558T	121857.00	
JMM3559T	121860.00	
JMM3611T	131579.00	
JMM3613T	131580.00	
JMM3615T	131581.00	
JMM3616T	131582.00	
JMM3709T	132027.00	
JMM3710T	140622.00	
JMM3711T	131583.00	
JMM3713T	140764.00	
JMM3714T	140623.00	
JMM4103T	151418.60	
JMM4104T	151422.60	
JMM4106T	151569.60	
JMM4107T	151417.60	
JMM4108T	151420.60	
JMM4109T	151424.60	
JMM4110T	151426.60	
JMWDM3550T	121580.00	
JMWDM3555T	121582.00	
JMWDM3555T	G121582.00	
JMWDM3558T	121583.00	
JMWDM3558T	G121583.00	
JMWDM3559T	121584.00	
JMWDM3599T	G121584.00	
JMWDM3611T	131967.00	
JMWDM3611T	G131967.00	C15
JMWDM3613T	131968.00	
JMWDM3613T	G131968.00	C15
JMWDM3615T	131969.00	
JMWDM3615T	G131969.00	
JMWDM3616T	G131970.00	
JMWDM3710T	140733.00	
JMWDM3710T	G140733.00	
JMWDM3711T	140734.00	
JMWDM3711T	G140734.00	
JMWDM3713T	G140736.00	C15
JMWDM3714T	G140735.00	
JPL1409T	131881.00	
JPL1509T	140646.00	
JPM2333T	G151747.60	
JPM2334T	G151749.60	
JPM2513T	801051.00	
JPM2514T	801056.00	
JPM2515T	801052.00	
JPM2515T	G801056.00	
JPM2516T	801057.00	
JPM2531T	801053.00	
JPM3154T	121846.00	
JPM3157T	121847.00	
JPM3158T	121849.00	
JPM3158T	G121849.00	

Competitor Catalogue #	LEESON Motors Catalogue #	Exception Code(s) To LEESON Motors
JPM3211T	131882.00	
JPM3212T	131884.00	
JPM3218T	131883.00	
JPM3218T	G131883.00	
JPM3219T	131885.00	
JPM3311T	140667.00	
JPM3312T	140655.00	
JPM3313T	140668.00	
JPM3314T	140656.00	
JPM3558T	G151737.60	
JPM3610T	G151738.60	
JPM3611T	G151739.60	
JPM3613T	G151740.60	
JPM3615T	G151741.60	
JPM3709T	G151742.60	
JPM3710T	G151743.60	
JPM3711T	G151744.60	
JPM3713T	G151746.60	
JPM3714T	G151745.60	
JPM4103T	G151751.60	
JPM4104T	G151753.60	
JPM4106T	G151748.60	
JPM4107T	G151750.60	
JPM4108T	G151752.60	
JPM4109T	G151754.60	
JPM4110T	G151755.60	
JPM4114T	G151756.60	
JSL1303A	MST1052.00	
JSL1306A	MST1072.00	
JSL1309A	MST1102.00	
JSL1313A	MST1152.00	
JSL1317A	MST1202.00	
JSL325A	MST1052.00	
JSL425A	MST1072.00	
JSL525A	MST1102.00	
JSL625A	MST1152.00	
JSL725A	MST1202.00	
K3403	102866.00	F02
K3405	102870.00	F02
KBL3406	114165.00	
KBL3409	111950.00	
KBM3458	114158.00	
KL3403	102866.00	
KL3405	102870.00	
KM3003	103014.00	F02
KM3006	100375.00	F02
KM3454	101767.00	F02
KM3454-50	102184.00	
KNM3454	101648.00	F02
KNM3534	102863.00	F02
L1203M	101423.00	
L1205	100336.00	F02
L1206M	100588.00	F02
L1208	100184.00	
L1209	100338.00	
L1209M	100004.00	F02
L1301	100006.00	
L1301M	100588.00	
L1302	110001.00	
L1303	100337.00	F02
L1304	100007.00	F02
L1304A	100002.00	F02
L1304M	100004.00	F02
L1306	100340.00	
L1306-50	113902.00	
L1307	100008.00	F02
L1307-50	110396.00	
L1307A	100003.00	F02

*Baldor is believed to be the trademark or trade name of ABB ASEA Brown Boveri Ltd. and is not owned or controlled by Regal Beloit Corporation.

Cross Reference

Baldor®* to LEESON® Motors

Competitor Catalogue #	LEESON Motors Catalogue #	Exception Code(s) To LEESON Motors
L1307M	100005.00	F02
L1308	110003.00	F02
L1309	110360.00	
L1309-50	113903.00	
L1310	110004.00	
L1313-50	113904.00	
L1313T	120107.00	
L1317-50	113905.00	
L1318-50	110397.00	
L1318T	120044.00	
L1319	110005.00	
L1319-50	110398.00	
L1319M	110006.00	
L1319T	120004.00	
L1319T	120042.00	
L1320T	120106.00	
L1321TM	120004.00	
L1322T	120067.00	
L1322TM	120879.00	
L1405T	131515.00	
L1405T-50	131553.00	
L1406T	131636.00	
L1408T	131534.00	
L1408T-50	131554.00	
L1408TM	131561.00	
L1408TM	131851.00	
L1409T	131616.00	
L1410T	131537.00	
L1410TM	131622.00	
L1430T	131537.00	
L1430TM	131622.00	
L1508T-50	131555.00	
L1509T	140680.00	
L1510T	140155.00	
L1511T	140681.00	
L1512T	140311.00	
L206	100006.00	
L3351	092111.00	
L3353	092114.00	
L3355	092116.00	
L3356	092112.00	
L3400	102012.00	
L3401	102013.00	
L3403	102014.00	
L3403M	101446.00	
L3404	102015.00	
L3405	102016.00	
L3406	100955.00	
L3406M	102018.00	
L3407	102019.00	
L3408	102020.00	
L3409	100956.00	
L3500	114617.00	
L3501	102931.00	
L3501M	102933.00	
L3502	110009.00	

Competitor Catalogue #	LEESON Motors Catalogue #	Exception Code(s) To LEESON Motors
L3503	102905.00	
L3503-50	113917.00	
L3504	102906.00	
L3504-50	110064.00	
L3504A	102908.00	
L3504M	102909.00	
L3505	110011.00	
L3506	110276.00	
L3506-50	113918.00	
L3507	110013.00	
L3507-50	110065.00	
L3507A	110017.00	
L3507M	110022.00	
L3508	110400.00	
L3509-50	113919.00	
L3510T	120025.00	
L3510TM	120008.00	
L3513T	120130.00	
L3514	110253.00	
L3514A	110019.00	
L3514M	113333.00	
L3514T	120026.00	
L3514TM	120009.00	
L3515	110352.00	
L3515M	110402.00	
L3515T	120036.00	
L3516T	121507.00	
L3516TM	110090.00	
L3605T	131509.00	
L3605T-50	131556.00	
L3606T	131637.00	
L3608T	131549.00	
L3609T	131533.00	C10
L3609T-50	131557.00	
L3613T	131526.00	
L3709T	140684.00	
L3710T	140120.00	
L3711T	140685.00	
L3712T	140581.00	
M1504T	120942.00	
M1506T	131473.00	
M1508T	140446.00	
M1554T	120944.00	
M1556T	120946.00	
M1558T	131469.00	
M1559T	140443.00	
M1704T	120943.00	
M1706T	131471.00	
M1707T	131470.00	
M1708T	140445.00	
M1756T	120940.00	
M1758T	131475.00	
M1760T	140448.00	
M2276T	G150122.60	
M2280T	151355.22	
M2280T	G151355.22	
M2332T	G150123.60	
M2333T	G150066.60	
M2333T-5	LM16400	
M2333T-50	170062.60	
M2333T-8	LM32691	
M2334T-12	G150007.60	
M2334T-5	LM15919	
M2394T	G150062.60	
M2395T	150261.22	
M2395T	G150261.22	
M2401T	151356.22	
M2401T	G151356.22	

Competitor Catalogue #	LEESON Motors Catalogue #	Exception Code(s) To LEESON Motors
M2402T	150282.22	
M2402T	G150282.22	
M2513T	G140579.00	
M2513T-5	LM24219	
M2513T-8	LM26334	
M2515T-5	LM24232	
M2515T-8	LM32675	
M2531T-5	LM29581	
M2531T-8	LM33067	
M2535T-5	LM29865	
M2535T-8	LM32670	
M2539T-5	LM14402	
M2539T-8	LM32680	
M2543T-5	LM14405	
M2543T-8	LM33070	
M2547T-5	LM18378	
M2551T-5	LM18384	
M2555T-5	LM18298	
M2557T-4	170259.60	C15
M2560T-4	171576.60	C15
M2562T-4	171573.60	C15
M2563T-4	G151523.60	
M2564T-4	171577.60	C15
M2566T-4	151524.60	
M2566T-4	G151524.60	
M2569T-4	151525.60	
M2569T-4	G151525.60	
M2583T	170255.60	C15
M3003	100027.00	F02
M3006	101447.00	
M3007	100446.00	
M3104	100028.00	
M3105	110425.00	
M3107	101448.00	
M3108	100029.00	
M3109	110027.00	
M3111	101449.00	
M3112	100030.00	
M3115	110426.00	
M3116	110029.00	
M3116T	G120010.00	
M3116T-5	LM24170	
M3116T-5	LM25066	
M3116T-8	LM33053	
M3120	110429.00	
M3120T	G120103.00	
M3153	110028.00	
M3154	110430.00	
M3154	111309.00	
M3154	115825.00	
M3154A	111309.00	
M3154T	G120011.00	
M3154T-8	LM33056	
M3155	113292.00	
M3155T	G120076.00	
M3156T	G120089.00	
M3157	111310.00	
M3157	113025.00	
M3157	115826.00	
M3157T	G120012.00	
M3157T-5	LM24124	
M3157T-8	LM33057	
M3158	113293.00	
M3158T	G120077.00	
M3207T	G130010.00	
M3211T	G130000.00	
M3211T/36	G130000.00	
M3211T-5	LM24227	

Cross Reference Exception Codes

LEESON Product Construction Exceptions

C10 LEESON motor is capacitor start/induction run design

C15 LEESON motor is premium efficiency design

C47 LEESON motor is 208-230/460V

C55 LEESON motor has a solid-state switch

LEESON Product Frame Size Exceptions

F02 LEESON frame size is S56

F29 LEESON frame size is 56HC

This information is furnished as a guide only. Always check specific motor to determine suitability for direct replacement

*Baldor is believed to be the trademark or trade name of ABB ASEA Brown Boveri Ltd. and is not owned or controlled by Regal Beloit Corporation

Cross Reference

Baldor®* to LEESON® Motors

Competitor Catalogue #	LEESON Motors Catalogue #	Exception Code(s) To LEESON Motors
M3211T-50	131519.00	
M3211T-8	LM33059	
M3211TA	G131338.00	
M3212T	G130282.00	
M3215T	G130012.00	
M3218T	G130004.00	
M3218T-5	LM25070	
M3218T-8	131500.00	
M3218TA	G130565.00	
M3219T	G130284.00	
M3305T	G140550.00	
M3306T	G151809.22	
M3309T	G140122.00	
M3311T	G140471.00	
M3311T-5	LM24229	
M3311T-50	140470.00	
M3311T-8	131547.00	
M3312T	G140682.00	
M3313T	G140490.00	
M3313T-5	LM24231	
M3313T-8	140004.00	
M3314T	G140683.00	
M3454	101646.00	
M3457	102684.00	
M3457	102864.00	
M3458	101647.00	
M3460	100905.00	
M3461	100905.00	
M3463	100960.00	
M3534	101079.00	
M3535	110441.00	
M3537	110143.00	
M3538	100913.00	
M3538-50	102693.00	
M3539	110353.00	
M3541	110313.00	
M3541-5	110354.00	
M3541-50	114306.00	
M3542	110034.00	
M3542-5	110178.00	
M3543	121009.00	
M3543-5	111394.00	
M3543T	121009.00	
M3545	110145.00	
M3545-5	110715.00	
M3545-50	114308.00	
M3546	110035.00	
M3546-5	110206.00	
M3546T	G120014.00	
M3546T-5	LM24109	
M3546T-50	121096.00	
M3546T-8	120047.00	
M3550	110745.00	
M3550T	G120086.00	
M3550T-50	121097.00	
M3554	110444.00	
M3554T-50	121093.00	
M3554T-8	120032.00	
M3555T	G120088.00	
M3555T-50	121094.00	
M3556T	G120087.00	
M3557	114930.00	
M3558	113026.00	
M3558T	G120016.00	
M3558T-5	LM24108	
M3558T-50	121095.00	
M3558T-8	120034.00	
M3559T	G120185.00	

Competitor Catalogue #	LEESON Motors Catalogue #	Exception Code(s) To LEESON Motors
M3607T	G130015.00	
M3607T	G131479.00	
M3610T	G130099.00	
M3610T-50	131480.00	
M3611T	G130008.00	
M3611T/36	G130008.00	
M3611T-5	LM16384	
M3611T-50	131459.00	
M3611T-8	131465.00	
M3613T	G130101.00	
M3613T-50	131481.00	
M3614T	G130016.00	
M3615T	G130027.00	
M3615T-5	LM16387	
M3615T-50	131454.00	
M3615T-8	131466.00	
M3616T	G131082.00	
M3617T	131478.00	
M3617T	G131478.00	
M3618T	131479.00	
M3660T	G151563.60	
M3661T	G151320.60	
M3663T	G150299.60	
M3665T	G151322.60	
M3702T	140516.00	
M3702T	G140516.00	
M3705T	140518.00	
M3708T	G140126.00	
M3709T	G130103.00	
M3710T	G140578.00	
M3710T-5	140593.00	
M3710T-8	131467.00	
M3711T	G140686.00	
M3713T	G140687.00	
M3714T	G140489.00	
M3714T-5	LM16395	
M3714T-50	140451.00	
M3714T-8	140013.00	
M3750T	G151809.22	
M3769T	G150158.60	
M3770T	G150157.60	
M3771T	G150159.60	
M3774T	G150140.60	
M4100T	G150068.60	
M4102T	G150001.60	
M4103T-12	G150011.60	
M4103T-5	LM16407	
M4104T-12	G150015.60	
M4104T-5	LM19595	
M4104T-8	170015.60	
M4106T	G150033.60	
M4107T	G150035.60	
M4108T	G150037.60	
M4109T	G150039.60	
M4110T-12	G150019.60	
M4110T-5	LM14396	
M4111T	G150003.60	
M4112T	150263.22	
M4112T	G150263.22	
M4114T	G150041.60	
M4115T-12	G150023.60	
M4115T-5	LM14399	
M4116T	150265.22	
M4117T	G150005.60	
M4118T	G151318.60	
M4308T	G150096.60	
M4310T	G150043.60	
M4312T	G150097.60	

Competitor Catalogue #	LEESON Motors Catalogue #	Exception Code(s) To LEESON Motors
M4313T	G150045.60	
M43145T-5	LM18366	
M4314T-12	G150027.60	
M4316T-12	G150031.60	
M4316T-5	LM18372	
M4400T	LM18292	
M4400T-12	G150087.60	
M4402T-4	G150160.60	
M4403T	G150098.60	
M4404T	G150099.60	
M4406T-4	G151371.60	
M4407T-4	G150352.60	
M4409T	G151367.60	
M4410T-4	G151369.60	
M4411T-4	G151370.60	
M4412T-4	G151368.60	
M44156T-4	171315.60	C15
M44206T-4	171316.60	C15
M44304T-4	151529.60	
M44304T-4	G151529.60	
M44354T	G151530.60	
M44354T-4	151530.60	
M7009A	111937.00	
M7010A	111923.00	
M7013	111942.00	
M7018T	G120489.00	
M7034T	121915.00	
M7034T	G120490.00	
M7037T	G120391.00	
M7053T	G158000.00	
M7054T	G158001.00	
M7056T	G158010.00	
M7058T	G825047.00	
M7059T	G825039.00	
M7060T	G825041.00	
M7062T	G825043.00	
M7063T	G825046.00	
M7064T	G825045.00	
M7066T	G825002.00	
M7067T	G825042.00	
M7068T	G825005.00	
M7071T	121916.00	
M7071T	G120491.00	
M7075T	G120387.00	
M7081T	G825044.00	
M7083T	G825040.00	
M7090T	G825008.00	
M7142T	G158362.00	
M7144T	G158366.00	
M7147T	G158157.00	
M7170T	G158140.00	
M7174T	G158159.00	
M74124T-4	G825011.00	
M74154T-4	G825014.00	
MM2333	193131.60	
MM2334	193141.60	
MM3554	192061.00	
MM3555	192070.00	
MM3558	192071.00	
MM3559	192080.00	
MM4103	193151.60	
MM4104	193161.60	
MM4110	193171.60	
MM5100	192010.00	
MM5100-5	192088.00	
MM5150	192011.00	
MM5150-5	192089.00	
MM5200	192020.00	

*Baldor is believed to be the trademark or trade name of ABB ASEA Brown Boveri Ltd. and is not owned or controlled by Regal Beloit Corporation.

Cross Reference

Baldor®* to LEESON® Motors

Competitor Catalogue #	LEESON Motors Catalogue #	Exception Code(s) To LEESON Motors
MM5200-5	192097.00	
MM5250	192021.00	
MM5250-5	192098.00	
MM5300	192030.00	
MM5300-5	192106.00	
MM5350	192031.00	
MM5350-5	192107.00	
MM5400	192040.00	
MM5400-5	192115.00	
MM5450	192041.00	
MM5450-5	192116.00	
MM5500	192050.00	
MM5500-5	192124.00	
MM5550	192051.00	
MM5550-5	192125.00	
MM5600	192060.00	
MM5600-5	192133.00	
MM5650	192061.00	
MM5650	192202.00	
MM5650-5	192134.00	
MM5650-5	192230.00	
MM5650D	192203.00	
MM5700	192070.00	
MM5700-5	192142.00	
MM5750	192071.00	
MM5750-5	192143.00	
MVM2613D	193336.60	
MVM3457D	192024.00	
MVM3458C	192028.00	
MVM3458D	192025.00	
MVM3460C	192037.00	
MVM3460D	192034.00	
MVM3461C	192038.00	
MVM3461D	192035.00	
MVM3463C	192047.00	
MVM3463D	192044.00	
MVM3542C	192048.00	
MVM3542D	192045.00	
MVM3545C	192057.00	
MVM3545D	192054.00	
MVM3546C	192058.00	
MVM3546D	192055.00	
MVM3550C	192067.00	
MVM3550D	192064.00	
MVM3554C	192068.00	
MVM3554D	192065.00	
MVM3555C	192077.00	
MVM3555D	192074.00	
MVM3558C	192078.00	
MVM3558D	192075.00	
MVM3559C	192087.00	
MVM3559C	192214.00	
MVM3559D	192084.00	
MVM3559D	192211.00	
MVM3611C	193088.60	
MVM3611C	193359.60	

Competitor Catalogue #	LEESON Motors Catalogue #	Exception Code(s) To LEESON Motors
MVM3611D	193334.60	
MVM3613C	193107.60	
MVM3615D	193337.60	
MVM3709D	193342.60	
MVM3710D	193343.60	
MVM3711D	193345.60	
MVM5100C	192017.00	
MVM5100D	192014.00	
MVM5150C	192018.00	
MVM5150D	192015.00	
MVM5200C	192027.00	
MVM5200D	192024.00	
MVM5250C	192028.00	
MVM5250D	192025.00	
MVM5300C	192037.00	
MVM5300D	192034.00	
MVM5350C	192038.00	
MVM5350D	192035.00	
MVM5400C	192047.00	
MVM5400D	192044.00	
MVM5450C	192048.00	
MVM5450D	192045.00	
MVM5500C	192057.00	
MVM5500D	192054.00	
MVM5550C	192058.00	
MVM5550D	192055.00	
MVM5600C	192067.00	
MVM5600D	192064.00	
MVM5650C	192068.00	
MVM5650C	192204.00	
MVM5650D	192065.00	
MVM5700C	192077.00	
MVM5700C	192213.00	
MVM5700D	192074.00	
MVM5700D	192210.00	
MVM570C	192207.00	
MVM5750C	192078.00	
MVM5750D	192075.00	
MVM5750D	192206.00	
NM3542	114309.00	
NM3546T	121098.00	
PCL1313M	114214.00	
PCL1317M	114215.00	
PCL3513M	115024.00	
PL1313M	113631.00	
PL1317M	113632.00	
PL1319M	113266.00	
PL1327M	116708.00	
PL3513M	110109.00	
PSC3413A	100699.00	
PSC3413A	100701.00	
PSC3413A	M099801.00	
PSC3416A	100700.00	
PSC3416A	M090253.00	
PSC3524A	100701.00	
RHM3104	100210.00	
RHM3108	100145.00	
RHM3108A	100796.00	
RHM3111	101773.00	
RHM3111A	101641.00	
RHM3112A	100908.00	
RHM3115	114192.00	
RHM3116	110052.00	
RHM3116A	111311.00	
RHM3120A	113896.00	
RHM3154	110433.00	
RHM3154A	113846.00	
RHM3155A	113897.00	

Competitor Catalogue #	LEESON Motors Catalogue #	Exception Code(s) To LEESON Motors
RHM3157	114197.00	
RHM3157A	113847.00	
RHM3158	113926.00	
RHM3158TA	113926.00	
RHM3161TA	116593.00	
RHM3162TA	121665.00	
RL1301A	100110.00	
RL1301A277	102964.00	
RL1304A	100011.00	
RL1304A277	102965.00	
RL1307A	100065.00	
RL1307A277	102966.00	
RL1309A	110478.00	
RL1310A	110054.00	
RL1310A277	116599.00	
RL1313A	110479.00	
RL1317A	113633.00	
RL1319A	110579.00	
RL1319A277	116600.00	
RL1323A	100064.00	
RL144A	100109.00	
RL345A	100011.00	
RL425A	100603.00	
RM3104	100210.00	
RM3108	100145.00	
RM3108A	100796.00	
RM3111	101773.00	
RM3111A	101641.00	
RM3112	100146.00	
RM3112A	100908.00	
RM3115	114192.00	
RM3115A	113895.00	
RM3116	110052.00	
RM3116A	111311.00	
RM3120	114194.00	
RM3120A	113896.00	
RM3154	110433.00	
RM3154A	113846.00	
RM3155	114196.00	
RM3155A	113897.00	
RM3157	114197.00	
RM3157A	113847.00	
RM3158TA	113926.00	
RM3161TA	116593.00	
RSP1441A	191868.00	
RSP1442A	191868.00	
RSP2441A	191869.00	
RSP2442A	191869.00	
RSP3441A	191870.00	
RSP3442A	191870.00	
UCL1015	140640.00	
UCL1015	141084.00	
UCL570	131847.00	
UCL710	131848.00	
UCL710	140640.00	
UCM1014	140641.00	
UCM575	131849.00	
UCM713	131850.00	
UCME1014	140641.00	
UCME570	131849.00	
V2I325A	MK1052.00	
V2L425A	MK1072.00	
V2L525A	MK1102.00	
VBM3108	114156.00	
VBM3112	114157.00	
VBM3116	114166.00	
VBM3116T	121678.00	
VBM3154	116766.00	

Cross Reference Exception Codes

LEESON Product Construction Exceptions

C10 LEESON motor is capacitor start/induction run design

C15 LEESON motor is premium efficiency design

C47 LEESON motor is 208-230/460V

C55 LEESON motor has a solid-state switch

LEESON Product Frame Size Exceptions

F02 LEESON frame size is S56

F29 LEESON frame size is 56HC

This information is furnished as a guide only. Always check specific motor to determine suitability for direct replacement

*Baldor is believed to be the trademark or trade name of ABB ASEA Brown Boveri Ltd. and is not owned or controlled by Regal Beloit Corporation

Cross Reference

Baldor®* to LEESON® Motors

Competitor Catalogue #	LEESON Motors Catalogue #	Exception Code(s) To LEESON Motors
VBM3154T	120372.00	
VBM3157T	120373.00	
VBM3211T	131624.00	
VBM3218T	131625.00	
VBM3248T	131625.00	
VBM3546	114161.00	
VBM3546T	121556.00	
VBM3554	116768.00	
VBM3554T	120331.00	
VBM3558T	120332.00	
VBM3611T	131610.00	
VBM3615T	131611.00	
VBM3710T	131612.00	
VBM3714T	140637.00	
VEFWDM3554T	G121655.00	
VEJMM3116T	122073.00	
VEJMM3154T	122077.00	
VEJMM3157T	122080.00	
VEJMM3546T	122084.00	
VEJMM3554T	122088.00	
VEJMM3558T	122092.00	
VEM3542	114213.00	
VEM3545	116748.00	
VEM3546	114638.00	
VEM3550	116750.00	
VEM3554	116743.00	
VEM3554T	121066.00	
VEM3555	116744.00	
VEM3555	116751.00	
VEM3556	116749.00	
VEM3558	116744.00	
VEM3558T	121065.00	
VEM3610T	199082.00	
VEM3610T	G131513.00	
VEM3615T	131501.00	
VEM3710T	140486.00	
VEM3714T	140484.00	
VFDL3501M	113290.00	
VFDL3501M	M002290.00	
VFDL3504M	110492.00	
VFDL3504M	M009492.00	
VFDL3507M	110493.00	
VFDL3507M	M009493.00	
VFDL3510M	110494.00	
VFDL3510M	M009494.00	
VFDL3516TM	120855.00	
VL1303A	100204.00	
VL1303A	101524.00	
VL1306A	100205.00	
VL1306A	101525.00	
VL1309A	100722.00	
VL1309A	101526.00	
VL1313A	110288.00	
VL1313A	113686.00	
VL1317A	110289.00	
VL1323A	110280.00	
VL325A	100204.00	
VL3501	101766.00	F02
VL3503	102864.00	
VL3503-50	113912.00	
VL3504-50	113922.00	
VL3505	110411.00	
VL3506	110413.00	
VL3506-50	113913.00	
VL3507	110057.00	
VL3507-50	113923.00	
VL3508	110414.00	
VL3509	110416.00	

Competitor Catalogue #	LEESON Motors Catalogue #	Exception Code(s) To LEESON Motors
VL3509-50	113914.00	
VL3510	110058.00	
VL3510-50	113924.00	
VL3510T	121001.00	
VL3513	110419.00	
VL3513T	120101.00	
VL3514	110420.00	
VL3514-50	113925.00	
VL3514T	120017.00	
VL3515	110422.00	
VL3515T	120102.00	
VL3605T	131516.00	
VL3609T	131545.00	
VL4005A	111095.00	
VL425A	100205.00	
VL5003A	111098.00	
VL5004A	111085.00	
VL5006A	111097.00	
VL5007A	111086.00	
VL5009A	111096.00	
VL5023A	110852.00	
VL5030	114424.00	
VL525A	100722.00	
VL625A	110288.00	
VL725A	110289.00	
VL825A	110280.00	
VM2333T	151350.60	
VM2333T	G151350.60	
VM2334T	151352.60	
VM2334T	G151352.60	
VM2513T	G151682.60	
VM2514T	G151683.60	
VM2515T	G151684.60	
VM2516T	G151685.60	
VM2531T	G151686.60	
VM2534T	G151687.60	
VM3104	100048.00	F02
VM3107	100056.00	F02
VM3108	100049.00	
VM3109	110434.00	
VM3111	100378.00	F02
VM3112	100050.00	F02
VM3115	110111.00	
VM3116T	G120172.00	
VM3120	110437.00	
VM3120T	121668.00	
VM3153	116728.00	
VM3153T	120063.00	
VM3154	110044.00	
VM3154T	120081.00	
VM3154T	G120081.00	
VM3155	113894.00	
VM3155T	121670.00	
VM3155T	G121670.00	
VM3156T	120082.00	
VM3156T	G120082.00	
VM3157	115553.00	
VM3157T	120035.00	
VM3157T	G120035.00	
VM3158	114420.00	
VM3158T	121187.00	
VM3158T	G121187.00	
VM3159T	121669.00	
VM3159T	G121669.00	
VM3161T	121405.00	
VM3161T	G131489.00	
VM3211T	131489.00	
VM3211T	131518.00	

Competitor Catalogue #	LEESON Motors Catalogue #	Exception Code(s) To LEESON Motors
VM3212T	131779.00	
VM3212T	G131779.00	
VM3215T	132059.00	
VM3215T	G132059.00	
VM3218T	131490.00	
VM3218T	G131490.00	
VM3219T	131780.00	
VM3219T	G131780.00	
VM3305T	140765.00	
VM3305T	G140765.00	
VM3311T	131527.00	
VM3311T	G140580.00	
VM3312T	140688.00	
VM3313T	140108.00	
VM3313T	G140108.00	
VM3314T	140689.00	
VM3314T	G140689.00	
VM3534	101769.00	F02
VM3534-50	102689.00	
VM3535	113311.00	
VM3537	114176.00	
VM3537-50	102691.00	
VM3538	102860.00	
VM3538-50	102694.00	
VM3539	110163.00	
VM3541	110448.00	
VM3541-50	114893.00	
VM3542	110047.00	
VM3542-5	110177.00	
VM3542-50	114894.00	
VM3543	112378.00	
VM3543T	120097.00	
VM3545	110112.00	
VM3545-50	114895.00	
VM3546	110048.00	
VM3546-5	110204.00	
VM3546T	120024.00	
VM3546T	G120024.00	C15
VM3546T-5	120176.00	
VM3546T-5	G120176.00	
VM3546T-50	121272.00	
VM3550	110192.00	
VM3550T	120105.00	
VM3550T	G120105.00	C15
VM3550T-50	121274.00	
VM3554	110125.00	
VM3554-5	111444.00	
VM3554T	120037.00	
VM3554T	G120037.00	C15
VM3554T-5	120177.00	
VM3554T-5	G120177.00	
VM3554T-50	121275.00	
VM3555	111273.00	
VM3555-5	111611.00	
VM3555T	120061.00	
VM3555T	G120061.00	
VM3555T-50	121276.00	
VM3556	112379.00	
VM3556T	120098.00	
VM3556T	G120098.00	C15
VM3557	113634.00	
VM3557T	120161.00	
VM3558	110451.00	
VM3558T	120038.00	
VM3558T	G120038.00	
VM3558T-5	120178.00	
VM3558T-5	G120178.00	
VM3558T-50	121277.00	

*Baldor is believed to be the trademark or trade name of ABB ASEA Brown Boveri Ltd. and is not owned or controlled by Regal Beloit Corporation.

Cross Reference

Baldor®* to LEESON® Motors

Competitor Catalogue #	LEESON Motors Catalogue #	Exception Code(s) To LEESON Motors
VM3559	111630.00	
VM3559T	120993.00	
VM3559T	G120993.00	
VM3610T	131513.00	
VM3611T	131491.00	
VM3611T	199083.00	
VM3611T	G131491.00	
VM3611T-5	131498.00	
VM3611T-5	G131498.00	
VM3613T	131514.00	
VM3613T	199084.00	
VM3613T	G131514.00	
VM3614T	131525.00	
VM3614T	G131525.00	
VM3615T	131492.00	
VM3615T	199085.00	
VM3615T	G131492.00	
VM3615T-5	131499.00	
VM3615T-5	G131499.00	
VM3616T	131510.00	
VM3616T	G131510.00	
VM3704T	131642.00	
VM3704T	G131642.00	
VM3708T	140535.00	
VM3708T	G140535.00	
VM3709T	131912.00	
VM3709T	G131912.00	
VM3710T	131528.00	
VM3710T	G141113.00	
VM3711T	140690.00	
VM3711T	G140690.00	
VM3713T	140691.00	
VM3713T	G140691.00	
VM3714T	140109.00	
VM3714T	G140109.00	C15
VM3774T	199089.00	
VM3774T	G151348.60	
VM37770T	199087.00	
VM37770T	G151346.60	
VM4103T	151507.60	
VM4103T	G151507.60	
VM4104T	151508.60	
VM4104T	G151508.60	
VM4106T	151351.60	
VM4106T	G151351.60	
VM7009A	111936.00	
VM7010A	111935.00	
VM7037T	121178.00	
VMDM3554	116647.00	
VMDM3558	114616.00	
VNM3537	110144.00	
VNM3538	102861.00	F02
VSSEWDM3537	117126.00	
VSSEWDM3538	117127.00	
VSSEWDM3541	117128.00	
VSSEWDM3542	117129.00	

Competitor Catalogue #	LEESON Motors Catalogue #	Exception Code(s) To LEESON Motors
VSSEWDM3545	117130.00	
VSSEWDM3546	117131.00	
VSSEWDM3550T	121750.00	
VSSEWDM3554	117297.00	
VSSEWDM3554T	121751.00	
VSSEWDM3555T	121742.00	
VSSEWDM3558	117298.00	
VSSEWDM3558T	121743.00	
VSSFWDM3542	103390.00	
VSSSWDM3537	117126.00	
VSSSWDM3538	103413.00	
VSSSWDM3538	117127.00	
VSSSWDM3541	117128.00	
VSSSWDM3542	103414.00	
VSSSWDM3542	117129.00	
VSSSWDM3545	117130.00	
VSSSWDM3546	117131.00	
VSSSWDM3550T	121750.00	
VSSSWDM3554	117297.00	
VSSSWDM3554T	121751.00	
VSSSWDM3555T	121742.00	
VSSSWDM3558	117298.00	
VSSSWDM3558T	121743.00	
VSSWDM3537	117279.00	
VSSWDM3538	116166.00	
VSSWDM3538	117270.00	
VSSWDM3541	117280.00	F02
VSSWDM3542	116168.00	
VSSWDM3542	117272.00	
VSSWDM3545	116318.00	
VSSWDM3545	117281.00	
VSSWDM3546	116170.00	
VSSWDM3548	117274.00	
VSSWDM3554T	G121525.00	
VSSWDM3558T	G121527.00	
VSSWDM3559T	121562.00	
VSSWDM3559T	G121562.00	
VSSWDM355T	G121561.00	
VSSWDM3611T	131923.00	
VSSWDM3611T	G131923.00	
VSSWDM3613T	131949.00	
VSSWDM3613T	G131949.00	
VSSWDM3615T	131924.00	
VSSWDM3615T	G131924.00	
VSWDM3536	114437.00	
VSWDM3538	114394.00	
VSWDM3538	191205.00	
VSWDM3542	114395.00	
VSWDM3542	191208.00	
VSWDM3546	191290.00	
VSWDM3546T	121109.00	
VSWDM3546T	191214.00	
VSWDM3554	114581.00	
VSWDM3554	191219.00	
VSWDM3554T	191220.00	
VSWDM3558T	191226.00	
VWDL3504	114313.00	C55
VWDL3507	114315.00	C55
VWDL3510	114317.00	C55
VWDL3514	114319.00	C55
VWDM2714T	G140465.00	
VWDM3538	113473.00	
VWDM3542	113019.00	
VWDM3546	113020.00	
VWDM3546T	120760.00	
VWDM3554	113021.00	
VWDM3554T	120761.00	
VWDM3558	114616.00	

Competitor Catalogue #	LEESON Motors Catalogue #	Exception Code(s) To LEESON Motors
VWDM3558T	120762.00	
VWDM3558T	G120762.00	
VWDM3559	115976.00	
VWDM3611T	131596.00	
VWDM3611T	G131596.00	
VWDM3615T	131597.00	
VWDM3615T	G131597.00	
VWDM3710T	140467.00	
VWDM3714T	140465.00	
WDM3558T	G120586.00	
WDM3558TP	G121191.00	
WDM3558TP9	121934.00	
WDM3561TP	115751.00	
WDM3561TP9	121944.00	
WDM3611T	G130662.00	
WDM3615T	G130663.00	
WDM3710T	G140280.00	
WDM3710T	G140467.00	
WDM3714T	G140281.00	
WWL3606	120728.00	
YPC144A	191872.00	
YPC164A	191891.00	
YPC244A	191871.00	
YPC245A	191910.00	
YPC264A	191892.00	
YPC265A	191911.00	
YPC344A	191873.00	
YPC345A	191875.00	
YPC364A	191893.00	
YPC365A	191912.00	

Cross Reference Exception Codes

LEESON Product Construction Exceptions

C10 LEESON motor is capacitor start/induction run design
C15 LEESON motor is premium efficiency design
C47 LEESON motor is 208-230/460V
C55 LEESON motor has a solid-state switch

LEESON Product Frame Size Exceptions

F02 LEESON frame size is S56
F29 LEESON frame size is 56HC

This information is furnished as a guide only. Always check specific motor to determine suitability for direct replacement

*Baldor is believed to be the trademark or trade name of ABB ASEA Brown Boveri Ltd. and is not owned or controlled by Regal Beloit Corporation

Cross Reference

WEG®* to LEESON® Motors

Competitor Catalogue #	LEESON® Motor Catalogue #
00118ES3ED56CFL	110048.00
00136EP3ESS56C	191209.00
00136ES3EB65C	110181.00
00136OS1BJPR56C	100722.00
00136OS1BJPR56J	100723.00
00156OS1BJPR56C	110288.00
00156OS1BJPR56J	110292.00
00236OS1BJPR56C	110289.00
00236OS1BJPR56J	110293.00
00336OS1DJPR56C	110280.00
00336OS1DJPR56J	110286.00
05018OS3EA56C	100601.00
1812EP3EAL71	192012.00
1818EP3EAL63	192011.00
1836EP3EAL63	192010.00
2512EP3EAL71	192022.00
2518EP3EAL71	192021.00
2518ES1BB56C	102916.00
2518ES3EB56	101646.00
2518OS1BB48	101423.00
2536EP3EAL63	192020.00
2536OS3EA56	100027.00
3312OS3EA56	110425.00
33180S1BC48C	103023.00
33180S1BC56CFL	100024.00
33180S3EA56CFL	100048.00
3318EP3ESS56C	191201.00
3318EP3ESS56CFL	191202.00
3318ES1BB56	102931.00
3318ES1BB56C	102930.00
3318ES1BPFC48	101253.00
3318ES1BPFC48	M090253.00
3318ES1BRBPFC4	100804.00
3318ES1RADB56N	101435.00
3318ES1RFDB56	113256.00
3318ES1RFDB56	M002256.00
3318ES3EB56	101079.00
3318ES3EB56	101647.00
3318ES3EB56C	102922.00
3318ES3EB56CFL	101769.00
3318OS1BC48	100116.00
3318OS1BC56	100006.00
3318OS3EA56	100028.00
3318OS3EA56	100446.00
33360S1BC48	100336.00
33360S1BC56CFL	100354.00
33360S3EA56CFL	100375.00
3336ES1BB56C	102929.00
3336ES1BB56CFL	102870.00
3336ES3EB56	102864.00
3336ES3EB56CFL	110446.00
3336OS3EA56	101447.00
3336OS3EA56C	100599.00
3336OS3EJPR56J	102197.00
3712EP3EAL80	192032.00
3718EP3EAL71	192031.00
3736EP3EAL71	192030.00
50120S3EB56CFL	110434.00
5012EP3ESS56CFL	191419.00
5012ES1BD56CFL	110411.00
5012ES3EB56	110353.00
5012ES3EB56C	110914.00
5012ES3EB56CFL	110163.00
5012OS3EB56	110027.00
50180S1BC56C	101651.00
50180S1BC56CFL	100025.00
50180S3EA56CFL	100049.00
5018EP3ESS56C	191204.00
5018EP3ESS56CFL	191205.00

Competitor Catalogue #	LEESON® Motor Catalogue #
5018ES1BB56	102906.00
5018ES1BB56C	102907.00
5018ES1BB56CFL	102862.00
5018ES1BPFC56	101176.00
5018ES1BRBPFC56	111323.00
5018ES1RADB56N	101436.00
5018ES1RFDB56	110086.00
5018ES1RFDB56	M009086.00
5018ES3EB56	100913.00
5018ES3EB56	100961.00
5018ES3EB56C	102917.00
5018ES3EB56CFL	102860.00
5018OS1BC48	100338.00
5018OS1BC56	100007.00
5018OS3EA56	100029.00
50360S1BC56C	103024.00
50360S1BC56CFL	100356.00
5036EP3ESS56C	191203.00
5036ES1BB56	102905.00
5036ES1BB56C	102903.00
5036ES1BJP56J	113637.00
5036ES1BJPR56J	113955.00
5036ES3EB56	100905.00
5036ES3EB56	110143.00
5036ES3EB56C	114142.00
5036ES3EB56CFL	114176.00
5036ES3EJPR56J	114931.00
5036OS1BC48	100184.00
5036OS1BC56	100337.00
5036OS1BJP56J	101527.00
5036OS1BJP56J	110281.00
5036OS1BJPR56C	100204.00
5036OS1BJPR56C	101524.00
5036OS1BJPR56J	100207.00
5036OS3EA56	101448.00
5036OS3EA56C	100600.00
5036OS3EA56CFL	100056.00
5036OS3EJPR56J	102198.00
5036OS3EJPR56J	102199.00
503ES1BB56CFL	102864.00
5512EP3EAL80	192042.00
5518EP3EAL80	192041.00
5536EP3EAL71	192040.00
7512EP3EAL90S	192200.00
7512EP3ESS56C	191415.00
7512EP3ESS56CFL	191420.00
7512ES1BF56	110400.00
7512ES1BF56CFL	110414.00
7512ES3ED56	110275.00
7512ES3ED56	121009.00
7512ES3ED56C	116340.00
7512ES3ED56CFL	112378.00
7512OS3EB56CFL	116728.00
7512OS3ED56	110028.00
75180S1BD56C	101650.00
75180S1BD56CFL	100026.00
7518EP3EAL80	192051.00
7518EP3ESS56C	191207.00
7518EP3ESS56CFL	191208.00
7518ES1BB56	110013.00
7518ES1BB56C	110905.00
7518ES1BB56CFL	110057.00
7518ES1BRBPFB56	111324.00
7518ES1RADB56N	101437.00
7518ES1RFDB56	110087.00
7518ES1RFDB56	M009087.00
7518ES3EB56	110034.00
7518ES3EB56C	110916.00
7518ES3EB56CFL	110047.00

Competitor Catalogue #	LEESON® Motor Catalogue #
7518OS1BD56	100008.00
7518OS3EB56	100030.00
7518OS3EB56C	100602.00
7518OS3EB56CFL	100050.00
75360S1BB56C	103025.00
75360S1BB56CFL	100357.00
7536EP3EAL80	192050.00
7536EP3ESS56C	191206.00
7536ES1BB56	110276.00
7536ES1BB56C	112135.00
7536ES1BB56CFL	110413.00
7536ES1BJP56J	113638.00
7536ES1BJPR56J	113956.00
7536ES3EB56	100960.00
7536ES3EB56	110313.00
7536ES3EB56C	110915.00
7536ES3EB56CFL	110448.00
7536ES3EJP56J	113028.00
7536ES3EJPR56J	114208.00
7536OS1BB56	100340.00
7536OS1BJP56J	101528.00
7536OS1BJPR56C	100205.00
7536OS1BJPR56C	101525.00
7536OS1BJPR56J	100208.00
7536OS1BJPR56J	110282.00
7536OS3EB56	101449.00
7536OS3EB56C	102971.00
7536OS3EB56CFL	100378.00
7536OS3EJPR56J	101637.00
7536OS3EJPR56J	101776.00
000336ES3EF56	114614.00
000412EP3EAL132M	193308.60
000418EP3EAL112M	193307.60
000436EP3EAL112M	193306.60
000509EP3E254T	G151355.22
000736ET3H213T	170196.60
00109EP3E182T	G131478.00
00112EP3ERS145TC	G120428.00
00112EP3ERSR145TC	G120098.00
00112ES3EF56CFL	112379.00
00112ET3E145T	171643.60
00112ET3E145T	————
00112ET3H145T	121938.00
00112OT3E145T	121517.00
001180S1BD56C	113930.00
001180S1BD56CFL	110220.00
00118EP3E143JM	G121855.00
00118EP3E143TC	121936.00
00118EP3EAL90S	192202.00
00118EP3ERS143TC	121179.00
00118EP3ERSR143TC	G120024.00
00118EP3ESS143TC	191487.00
00118EP3ESS56CFL	191213.00
00118ES1BD56C	110908.00
00118ES1BD56CFL	110058.00
00118ES1RADD56N	113301.00
00118ES1RADD56N	113302.00
00118ES1RFD143T	121569.00
00118ES1RFDDB56	110088.00
00118ES3ED56	110035.00
00118ES3ED56	115830.00
00118ET3E143JM-W22	122083.00
00118ET3E143JP-W22	122105.00
00118ET3E143T	171640.60
00118ET3E143T	————
00118ET3ERS143T	120921.00
00118ET3ERS143TC	116745.00
00118ET3H143T	121937.00
00118NP3ESS56CFL	191290.00

*WEG is the trademark or trade name of WEG S.A. sociedades anônimas (s/a) and is not owned or controlled by Regal Beloit Corporation.

Always check cross reference motor design and outline information to determine suitability for direct replacement, at www.regalbeloit.com/Brands/LEESON

Cross Reference

WEG®* to LEESON® Motors

Competitor Catalogue #	LEESON® Motor Catalogue #
00118OP3E143JM	G121850.00
00118OS1BD56	110004.00
00118OS3EB56	110029.00
00118OS3EB56	115827.00
00118OS3EB56C	110901.00
00118OT3E143JM-S1	122115.00
00118OT3E143JP-S	122093.00
00118OT3E143T	121003.00
00118ST3QIE143T	811541.00
0012ES3EBM145T	G121050.00
0012ES3EF56	113933.00
0013601BD56C	116769.00
001360S1BD56CFL	110384.00
00136EP3EAL80	192060.00
00136ES1BD56	110059.00
00136ES1BD56C	110180.00
00136ES1BD56CFL	110416.00
00136ES1BJP56J	113957.00
00136ES1BJPR56J	113639.00
00136ES3EB56CFL	110112.00
00136ES3EB56CFL	116748.00
00136ES3EJP56J	113029.00
00136ES3EJPR56J	114207.00
00136ES3ES3EB56	110145.00
00136OS1BCDB56	110160.00
00136OS1BD56	110360.00
00136OS1BJP56J	101529.00
00136OS1BJPR56C	101526.00
00136OS1BJPR56J	110283.00
00136OS3EB56	110426.00
00136OS3EB56C	116784.00
00136OS3EJPR56J	101638.00
00136OS3EJPR56J	101775.00
00136OS3EJPR56J	114203.00
0013OS3EB56CFL	110111.00
00152EP3ERS182T	G131479.00
00152EP3ERSR182TC	G132249.00
00152ES1E182T	131526.00
00152ET3ERS182T	131980.00
00152ET3H183T	132251.00
00152OT3E182T	131971.00
001560S1BD56C	116770.00
001560S1BD56CFL	110387.00
00156EP3E143JM	G121858.00
00156EP3ERS143TC	121672.00
00156EP3ERSR143TC	G120105.00
00156EP3ESS143TC	191488.00
00156EP3ESS56C	191215.00
00156ES1BD56	110094.00
00156ES1BD56C	110909.00
00156ES1BD56CFL	110419.00
00156ES1BJPR56J	113640.00
00156ES1E143T	120130.00
00156ES3EB56	110745.00
00156ES3EB56C	110917.00
00156ES3EB56CFL	110192.00
00156ES3EJP56J	113030.00
00156ES3EJPR56J	114206.00
00156ET3E143JM-W22	122085.00
00156ET3E143JP-W22	122107.00
00156ET3E143T	171642.60
00156ET3ERS143T	121518.00
00156ET3H143T	121939.00
00156OS1BCDD56	110161.00
00156OS1BD56	110361.00
00156OS1BJP56J	113687.00
00156OS1BJPR56C	113686.00
00156OS3ED56	110429.00

Competitor Catalogue #	LEESON® Motor Catalogue #
00156OS3ED56C	116785.00
00156OS3ED56CFL	110437.00
00156OS3EJPR56J	113891.00
00156OT3E143JM-S7	122074.00
00156OT3E143JP-S	122095.00
00156OT3E143T	121514.00
00156ST3QIE143T	811542.00
00156XP3E143T	121914.00
001580S1BF56C	113932.00
001580S1BF56CFL	110388.00
00158EP3E145JM	G121856.00
00158EP3E145JP	G151736.60
00158EP3E184T	171630.60
00158EP3ERS145TC	121180.00
00158EP3ERSR145TC	120037.00
00158EP3ERSR145TC	G120037.00
00158EP3ESS145CFL	G191220.00
00158EP3ESS56C	191217.00
00158EP3ESS56CFL	191219.00
00158ES1BF56	110019.00
00158ES1BF56	110253.00
00158ES1BF56C	110910.00
00158ES1BF56CFL	110420.00
00158ES1E145T	120026.00
00158ES1RFD145T	113938.00
00158ES1RFD56H	M009089.00
00158ES1RFDF56H	110089.00
00158ES3EBM145T	G120329.00
00158ES3ED56	110444.00
00158ES3ED56	115829.00
00158ES3ED56C	110918.00
00158ES3ED56CFL	110125.00
00158ET3E145JM-W22	122087.00
00158ET3E145JP-W22	122109.00
00158ET3E145T	171646.60
00158ET3ERS145T	120922.00
00158ET3ERS145TC	116746.00
00158ET3H145T	121940.00
00158OP3E145JP	G121846.00
00158OS1BF56	110005.00
00158OS3ED56	110430.00
00158OS3ED56	111309.00
00158OS3ED56	115825.00
00158OS3ED56C	110902.00
00158OS3ED56CFL	110044.00
00158OT3E145JP-S	122097.00
00158OT3E145T	121004.00
00158P3E145JM	G121851.00
00158ST3QIE145T	811543.00
00158XP3E145T	121915.00
0015ES1BJP56J	113958.00
0015OS1BJPR56J	110284.00
0018EP3ESS143TCFL	G191214.00
0018ES1BD56	110209.00
0018ES1E143T	120025.00
0018ES3EBM143T	G121679.00
0018ES3ED56C	110912.00
0018ESEBM143T	G121679.00
0018OS3EB56CFL	110043.00
001O8NP3ESS56C	191291.00
00209EP3E213T	G140516.00
002118EP3EAL100L	193301.60
00212EP3E112M	193302.60
00212EP3ERSR184TC	G131525.00
00212ES1E213T	140747.00
00212ES3EBM184T	G131620.00
00212ET3ERS184T	131981.00
00212ET3ERS184TC	132243.00

Competitor Catalogue #	LEESON® Motor Catalogue #
00212ET3H184T	132252.00
00212OT3E184T	131972.00
00218EP3E145JM	G121857.00
00218EP3E145JP	G151737.60
00218EP3ER145TC	G121178.00
00218EP3ERS145TC	G120038.00
00218EP3ESS145TC	191491.00
00218EP3ESS56C	191223.00
00218EP3ESS56CFL	191225.00
00218EP3ESS56CFL	G191226.00
00218ES1E145T	121507.00
00218ES1RFDF145T	110090.00
00218ES1RFDF182T	131541.00
00218ES1RFDG56H	M009090.00
00218ES3EBM145T	G120330.00
00218ES3EF56	113026.00
00218ES3EF56	115828.00
00218ES3EF56C	116106.00
00218ES3EF56CFL	110451.00
00218ES3ERS145TC	116747.00
00218ET3E145JM-W22	122091.00
00218ET3E145JP-W22	122113.00
00218ET3E145T	171647.60
00218ET3ERS145T	120923.00
00218ET3ERS145TC	121181.00
00218ET3H145T	121942.00
00218OP3E145JM	G121852.00
00218OP3E145JP	G121847.00
00218OS1BG56	120067.00
00218OS3EF56	111310.00
00218OS3EF56	113025.00
00218OS3EF56	115826.00
00218OS3EF56C	116630.00
00218OT3E145JP-S	122102.00
00218OT3EN145T	121005.00
00218ST3QIE145T	811545.00
00218XP3E145T	121917.00
0023600S1BF56C	116771.00
002360S1BF56	110363.00
002360S1BF56CFL	110390.00
00236EP3AL90L	192209.00
00236EP3E145JM	G121859.00
00236EP3ERSR145TC	G120061.00
00236EP3ESS145TC	191490.00
00236EP3ESS56C	191221.00
00236ES1BF56	110352.00
00236ES1BF56C	113931.00
00236ES1BF56CFL	110422.00
00236ES1BJP56J	113959.00
00236ES1BJPR56J	113641.00
00236ES1E145T	120036.00
00236ES3ED56	111916.00
00236ES3ED56C	113927.00
00236ES3ED56CFL	111273.00
00236ES3EJP56J	113031.00
00236ES3EJPR56J	114205.00
00236ET3E145JM-W22	122089.00
00236ET3E145JP-W22	122111.00
00236ET3E145T	171648.60
00236ET3ERS145T	121519.00
00236ET3ERS145TC	121673.00
00236ET3H145T	121941.00
00236OP3E145JM	G121853.00
00236OS1BCDD56	110232.00
00236OS1BJPR56J	110285.00
00236OS3ED56	113292.00
00236OS3ED56C	114218.00
00236OS3ED56CFL	113894.00

*WEG is the trademark or trade name of WEG S.A. sociedades anônimas (s/a) and is not owned or controlled by Regal Beloit Corporation.

Always check cross reference motor design and outline information to determine suitability for direct replacement, at www.regalbeloit.com/Brands/LEESON

Cross Reference

WEG®* to LEESON® Motors

Competitor Catalogue #	LEESON® Motor Catalogue #
00236OS3EJPR56J	113892.00
00236OS3EJPR56J	114202.00
00236OT3E145JP-SE145JP-S	122100.00
00236OT3E145T	121515.00
00236ST3QIE145T	811544.00
00236XP3E145T	121916.00
00312EP3AL132S	193305.60
00312EP3ERSR213TC	G131642.00
00312ES3EBM213T	G140601.00
00312ET3ERS213T	171378.60
00312ET3ERS213TC	140834.00
00312OT3E213T	171574.60
00318EP3E182JM	G131579.00
00318EP3E182JP	G151739.60
00318EP3EAL100L	193304.60
00318EP3ERSR182TC	G131491.00
00318ES1DFD184T	131542.00
00318ES1E184T	131533.00
00318ES3EBM182T	G131613.00
00318ET3E182JM-W22	199767.00
00318ET3E182JP-W22	199093.00
00318ET3E182T	171320.60
00318ET3E182T	————
00318ET3E182TC	171565.60
00318ET3ERS182T	131463.00
00318ET3ERS182TC	131504.00
00318ET3H182T	132253.00
00318OP3E182JM	G131562.00
00318OP3E182JP	G131882.00
00318OS1D184T	131534.00
00318OT3E182JM	199589.00
00318OT3E182JP	199770.00
00318OT3E182T	131519.00
00318ST3QIE182T	811547.00
00318XP3ER182TC	G825116.00
00318XT3E182T	825085.00
00318XT3E182TC	825126.00
00336EP3E145JM	G121860.00
00336EP3E182JP	G151738.60
00336EP3EAL100L	193303.60
00336EP3ESS182TC	191492.00
00336ES1E145T	120341.00
00336ES1E182T	131637.00
00336ES3EF56CFL	111630.00
00336ES3EJP56J	113032.00
00336ES3EJPR56J	114204.00
00336ET3E182JM-W22	199766.00
00336ET3E182JP-W22	199092.00
00336ET3ERS182T	131985.00
00336ET3ERS182TC	132079.00
00336OP3E145JM	G121854.00
00336OS1D182T	131636.00
00336OS3EF56	113293.00
00336OS3EF56C	121928.00
00336OS3EF56CFL	114420.00
00336OS3EJPR56J	113893.00
00336OS3EJPR56J	114201.00
00336OT3E145T	121516.00
00336ST3QIE182T	811546.00
00336XT3E182TC	825125.00
0033OS1BCDF56	110222.00
0036EP3ER182TC	G131513.00
0036EP3ERS182TC	114615.00
0036ET3E182TC	171564.60
00512EP3EAL132M	193311.60
00512EP3EAL132M	193312.60
00512EP3ERSR215TC	G140535.00

Competitor Catalogue #	LEESON® Motor Catalogue #
00512ET3E215T	————
00512ET3E215TC	171116.60
00512ET3ERS215T	171379.60
00512OT3E215T	171575.60
00518EP3E184JM	G131581.00
00518EP3E184JP	G151741.60
00518EP3EAL132S	193310.60
00518EP3ERSR184TC	G131492.00
00518ES1DFD184T	131543.00
00518ES1DFD215	140223.00
00518ES1DFD215T	140203.00
00518ES1E184T	131538.00
00518ES3EBM184T	G131614.00
00518ET3E184JM-W22	199769.00
00518ET3E184JP-W22	199095.00
00518ET3E184T	171322.60
00518ET3E184T	————
00518ET3E184TC	171566.60
00518ET3ERS184T	131464.00
00518ET3ERS184TC	131502.00
00518ET3H184T	132255.00
00518OP3E184JM	G131563.00
00518OS1C184T	131537.00
00518OT3E184JM	199590.00
00518OT3E184JP	199772.00
00518OT3E184T	131520.00
00518ST3QIE184T	811549.00
00518XP3ER184TC	G825128.00
00518XT3E184T	825087.00
00518XT3E184TC	825071.00
00536EP3E184JM	G131580.00
00536EP3E184JP	G151740.60
00536EP3EAL132S	193309.60
00536EP3ERSR184TC	G131514.00
00536ES1E184T	131549.00
00536ET3E184JM-W22	199768.00
00536ET3E184JP-W22	199094.00
00536ET3E184T	————
00536ET3E184TC	171446.60
00536ET3ERS184T	131987.00
00536ET3ERS184TC	132080.00
00536ET3H184T	132254.00
00536OP3E182JM	G131574.00
00536OP3E182JP	G131884.00
00536OS1CCDG56	111275.00
00536OS1D184T	131616.00
00536OT3E182JP	199097.00
00536OT3E182T	131986.00
00536OT3V182JM	199763.00
00536ST3QIE184T	811548.00
00536XT3E184T	825086.00
00709EP3E256T	G151356.22
00712EP3E160M	193314.60
00712ET3E254T	170122.60
00712ET3ERS254T	————
00712ETRS3E254TC	170138.60
00712OT3E254T	170145.60
00718EP3E213JM	G140622.00
00718EP3E213JP	G151743.60
00718EP3EAL132M	193313.60
00718EP3ER213TC	G151346.60
00718EP3ERSR213TC	G141113.00
00718ES1DFD215T	140130.00
00718ES1DFD215T	140707.00
00718ES1DFD215TZ	140209.00
00718ES1E215T	140120.00
00718ES3EBM213T	G140603.00
00718ET3E213	————

Competitor Catalogue #	LEESON® Motor Catalogue #
00718ET3E213JM-W22	199780.00
00718ET3E213JP-W22	199787.00
00718ET3E213T	170157.60
00718ET3E213TC	170165.60
00718ET3ERS213T	140450.00
00718ET3ERS213TC	140521.00
00718ET3H213T	141116.00
00718OP3E213JM	G140618.00
00718OP3E213JP	G140667.00
00718OS1CCD215T	140155.00
00718OT3E213JM	199775.00
00718OT3E213JP	199783.00
00718OT3E213T	140470.00
00718OT3E213T	170142.60
00718ST3QIE213T	811551.00
00718XT3E213T	825089.00
00718XT3E213TC	825073.00
00736EP3E184JM	G131582.00
00736EP3E213JM	G132027.00
00736EP3E213JP	G151742.60
00736EP3ER213TC	G151345.60
00736EP3ERSR213TC	G131510.00
00736EP3ERSR213TC	G131912.00
00736ES1E213T	140684.00
00736ET3E213JM-W22	199779.00
00736ET3E213JP-W22	199096.00
00736ET3E213T	170158.60
00736ET3E313TC	170166.60
00736ET3ERS213T	140756.00
00736ET3ERS213TC	140770.00
00736OP3E184JM	G131576.00
00736OP3E184JP	G131885.00
00736OS1C184T	140680.00
00736OT3E184JM	199765.00
00736OT3E184JP	199773.00
00736OT3E184T	131988.00
00736ST3QIE213T	811550.00
00736XT3E213T	825088.00
01009EP3E284T	G150282.22
01012ET3E256T	170123.60
01012ET3E356TC	170139.60
01012OT3E256T	170146.60
01018EP3E215JM	G140623.00
01018EP3E215JP	G151745.60
01018EP3ERSR215TC	G140109.00
01018ES1DFD215T	140414.00
01018ES1DFD215T	140706.00
01018ES1E215T	140581.00
01018ES3EBM215T	G140636.00
01018ET3E215JM-W22	199782.00
01018ET3E215JP-W22	199789.00
01018ET3E215T	170140.60
01018ET3E215T	————
01018ET3E215TC	170167.60
01018ET3ERS215T	140451.00
01018ET3ERS215TC	140522.00
01018OP3E215JM	G140619.00
01018OP3E215JP	G140668.00
01018OT3E215JM	199777.00
01018OT3E215JP	199785.00
01018OT3E215T	140472.00
01018OT3E215T	170144.60
01018ST3QIE215T	811553.00
01018XT3E215T	825091.00
01018XT3E215TC	825075.00
01036EP3E215JM	G141122.00
01036EP3E215JP	G151744.60
01036EP3ER215TC	G151347.60

*WEG is the trademark or trade name of WEG S.A. sociedades anônimas (s/a) and is not owned or controlled by Regal Beloit Corporation.

Always check cross reference motor design and outline information to determine suitability for direct replacement, at www.regalbeloit.com/Brands/LEESON

Cross Reference

WEG®* to LEESON® Motors

Competitor Catalogue #	LEESON® Motor Catalogue #
01036EP3ERSR215TC	G140690.00
01036ES1E215T	140685.00
01036ET3E215JM-W22	199781.00
01036ET3E215JP-W22	199788.00
01036ET3E215T	170159.60
01036ET3E215TC	170168.60
01036Et3ERS215T	140755.00
01036ET3ERS215TC	140769.00
01036ET3H215T	170197.60
01036OP3E213JM	G141121.00
01036OP3E213JP	G140655.00
01036OT3E213JP	199784.00
01036OT3E213T	140753.00
01036ST3QIE215T	811552.00
01036XT3E215T	825090.00
0108EP3ER215TC	G151348.60
01112EP3E160L	193317.60
01118EP3E160M	193316.60
01136EP3E160M	193315.60
0118ES1BRBPFD56	111267.00
0118ES1RFDD56	M009088.00
0118ES1RFDD56	M009089.00
01509EP3E286T	G150261.22
01512EP3E180L	193320.60
01512ET3E284T	170068.60
01512ET3E284T	————
01512ET3E284TC	170104.60
01512OT3E284T	170067.60
01518EP3E160L	193319.60
01518EP3E254JM	G151568.60
01518EP3E254JP	G151747.60
01518ET3E254JM-W22	199976.00
01518ET3E254JP-W22	199999.00
01518ET3E254T	170066.60
01518ET3E254T	————
01518ET3E254TC	171587.60
01518ET3H354T	170116.60
01518OP3E254JP	G801051.00
01518OT3E254JP	199987.00
01518OT3E254T	170065.60
01518ST3QIE254T	811555.00
01518XT3E254T	825093.00
01518XT3E254TC	825077.00
01536EP3E160M	193318.60
01536EP3E215JM	G140764.00
01536EP3E215JP	G151746.60
01536EP3E254JM	G151567.60
01536ET3E215JM-W22	199975.00
01536ET3E254C	171586.60
01536ET3E254JP-W22	199998.00
01536ET3E254T	170062.60
01536OP3E215JM	G151380.60
01536OP3E215JP	G140656.00
01536OT3E215JM	199091.00
01536OT3E215JP	199786.00
01536OT3E215T	170064.60
01536ST3QIE254T	811554.00
01536XT3254T	825092.00
0158EP3ER254TC	G151350.60
01812EP3E200L	193323.60
01818EP3E180M	193322.60
01836EP3E160L	193321.60
02009EP3E324T	G150263.22
02012ET3E286T	170001.60
02012ET3E286T	————
02012OT3E286T	170000.60
02018EP3E256JM	G151570.60
02018EP3E256JP	G151749.60

Competitor Catalogue #	LEESON® Motor Catalogue #
02018EP3ER256TC	G151352.60
02018ET3E256JM-W22	199978.00
02018ET3E256JP-W22	194119.00
02018ET3E256T	170007.60
02018ET3E256T	————
02018ET3E256TC	171589.60
02018OP3E256JM	G151362.60
02018OP3E256JP	G801052.00
02018OT3E256JP	199989.00
02018OT3E256T	170006.60
02018ST2QIE256T	811557.00
02018XT3E256T	825095.00
02018XT3E256TC	825079.00
02036EP3E254JM	G151569.60
02036EP3E254JP	G151748.60
02036EP3ER256TC	G151351.60
02036ET3E256JM-W22	199977.00
02036ET3E256JP-W22	194118.00
02036ET3E256T	170033.60
02036ET3E256TC	171588.60
02036OP3E254JM	G151381.60
02036OP3E254JP	G801056.00
02036OT3E254JM	199965.00
02036OT3E254JP	199988.00
02036OT3E254T	170032.60
02036ST3QIE256T	811556.00
02036XT3E256T	825094.00
0208ET3H256T	170117.60
02180S1BG56C(W/O MROL)	113281.00
02212EP3E200L	193326.60
02218EP3E180L	193325.60
02236EP3E180M	193324.60
0236ET2H256T	170199.60
02509EP3E326T	150265.22
02512ET3E324T	170003.60
02512OT3E324T	170002.60
02518EP3E284JM	G151418.60
02518EP3E284JP	G151751.60
02518EP3ER284TC	G151507.60
02518ET3E284JM-W22	199980.00
02518ET3E284JP-W22	194121.00
02518ET3E284T	170011.60
02518ET3E284T	————
02518ET3E284TC	171591.60
02518ET3H384T	170118.60
02518OP3E284JM	G801028.00
02518OP3E384JP	G801053.00
02518OT3E284JP	199991.00
02518OT3E284T	170009.60
02518ST3QIE284T	811559.00
02518XT3E284TC	825081.00
02518XT3H284T	825097.00
02536EP3E256JM	G151417.60
02536EP3E256JP	G151750.60
02536ET3E284JM-W22	199979.00
02536ET3E284JP-W22	194120.00
02536ET3E284TS	170035.60
02536ET3E284TSC	171590.60
02536ET3H284TS	170224.60
02536OP3E256JM	G151382.60
02536OP3E256JP	G801057.00
02536OT3E256JP	199990.00
02536OT3E256T	170034.60
02536ST3QIE284TS	811558.00
02536XT3E284TS	825096.00
03012EP3E225S/M	193329.60
03012ET3E326T	170005.60

Competitor Catalogue #	LEESON® Motor Catalogue #
03012OT3E326T	170004.60
03018EP3E286JM	G151422.60
03018EP3E286JP	G151753.60
03018EP3ER286TC	G151508.60
03018ET3E286JM-W22	199982.00
03018ET3E286JP-W22	194123.00
03018ET3E286T	170015.60
03018ET3E286T	————
03018ET3E286TC	171592.60
03018ET3H286T	170119.60
03018OP3E286JM	G801029.00
03018OP3E286JP	G801054.00
03018OT3E286JM	199970.00
03018OT3E286JP	199993.00
03018OT3E286T	170013.60
03018P3E200L	193328.60
03018ST3QIE286T	811561.00
03018XT3E286T	825099.00
03018XT3E286TC	825082.00
03036EP3E200L	193327.60
03036EP3E284JM	G151420.60
03036EP3E286JP	G151752.60
03036ET3E286JM-W22	199981.00
03036ET3E286JP-W22	194122.00
03036ET3E286TC	170108.60
03036ET3E286TS	170037.60
03036ET3H286TS	170228.60
03036OP3E284JM	G801040.00
03036OP3E284JP	G801058.00
03036OT3E284JM	199969.00
03036OT3E284JP	199992.00
03036OT3E284TS	170036.60
03036ST2QIE286TS	811560.00
03036XT3E286TS	825098.00
03712EP3E205S/M	193332.60
03718EP3E225S/M	193331.60
03736EPE200L	193330.60
04012ET3E364T	170096.60
04012OT3E364T	170147.60
04018EP3E324JM	G151426.60
04018EP3E324JP	G151755.60
04018ET3E324JM-W22	199984.00
04018ET3E324JP-W22	194125.00
04018ET3E324T	170019.60
04018ET3E324TC	171593.60
04018OP3E324JM	G801030.00
04018OP3E324JP	G801055.00
04018OT3E324JM	199972.00
04018OT3E324JP	199995.00
04018OT3E324T	170017.60
04018ST3QIE324T	811563.00
04018XT3E324T	825101.00
04018XT3E324TC	825083.00
04036EP3E286JM	G151424.60
04036EP3E324JP	G151754.60
04036ET3E324JM-W22	199983.00
04036ET3E324JP-W22	194124.00
04036ET3E324TS	170039.60
04036ET3E324TSC	170110.60
04036ET3H324TS	170232.60
04036OP3E286JM	G801041.00
04036OP3E286JP	G801059.00
04036OT3E286JM	199971.00
04036OT3E286JP	199994.00
04036OT3E286TS	170038.60
04036ST3QIE324TS	811562.00
04036XT3E324TS	825100.00
047018EP3ER324TC	G151509.60

*WEG is the trademark or trade name of WEG S.A. sociedades anônimas (s/a) and is not owned or controlled by Regal Beloit Corporation.

Always check cross reference motor design and outline information to determine suitability for direct replacement, at www.regalbeloit.com/Brands/LEESON

Competitor Catalogue #	LEESON® Motor Catalogue #
05012ET3E365T	170097.60
05012ET3E365T	————
05012OT3E365T	170148.60
05018EP3ER326TC	G151510.60
05018ET3E326JM-W22	199986.00
05018ET3E326JP-W22	194127.00
05018ET3E326T	170023.60
05018ET3E326T	————
05018ET3E326TC	171594.60
05018ET3H326T	170121.60
05018OT3E326JM	199974.00
05018OT3E326JP	199997.00
05018OT3E326T	170021.60
05018ST3QIE326T	811564.00
05018XT3E326T	825103.00
05018XT3E326TC	825084.00
05036EP3E324JP	G151756.60
05036ET3326TS	————
05036ET3E326JM-W22	199985.00
05036ET3E326JP-W22	194126.00
05036ET3E326TS	170041.60
05036ET3E326TSC	170112.60
05036OP3E324JM	G801042.00
05036OP3E324JP	G801060.00
05036OT3E324JM	199973.00
05036OT3E324JP	199996.00
05036OT3E324TS	170040.60
05036ST3QIE326TS	811564.00
05036XT3E326TS	825102.00
06012ET3E404T	170098.60
06012OT3E404T	170149.60
06016ST3QIE364T	811567.00
06018ET3E364T	170027.60
06018ET3E364TC	171595.60
06018ET3H364T	170239.60
06018OT3E364T	170025.60
06018XT3E364T	825105.00
06036ET3E364TS	170043.60
06036ET3E364TSC	170114.60
06036OT3E326TS	170042.60
06036ST3QIE364TS	811566.00
06036XT3E364TS	825104.00
07512ET3E405T	170099.60
07512OT3E405T	170150.60
07518ET3E365T	170031.60
07518ET3E365T	————
07518ET3EE365TC	171596.60
07518ET3H365T	170244.60
07518OT3E365T	170029.60
07518ST3QIE365T	811569.00
07518XT3E365T	825107.00
07536ET3E365TS	170045.60
07536ET3E365TSC	171115.60
07536OT3E364TS	170044.60
07536ST3QIE365TS	811568.00
07536XT3E365TS	825106.00
10012ET3E444T	170256.60
10012OT3E444T	170255.60
10018ET3E405T	170087.60
10018ET3E405T	————
10018ET3E405TC	171597.60
10018ET3H405T	170253.60
10018OT3E404T	170152.60
10018ST3QIE405T	811571.00
10018XT3E405T	825109.00
10036ET3E405T	————
10036ET3E405TS	170160.60
10036OT3E365TS	170151.60

Competitor Catalogue #	LEESON® Motor Catalogue #
10036ST3QIE405TS	811570.00
10036XT3E495TS	825108.00
12512ET3E445T	170260.60
12512OT3G445T	170259.60
12518ET3E444T	170369.60
12518ET3G444T	————
12518OT3E405T	170155.60
12518XT3E444T	825111.00
12536ET3G444TS	171580.60
12536OT3E404TS	170154.60
12536XT3G444TS	825110.00
15012ET3G447T	171315.60
15012OT3G445T	171576.60
15018ET3G445T	170371.60
15018ET3G445T	————
15018OT3G444T	171522.60
15018XT3E445T	825113.00
15036ET3G445TS	171578.60
15036OT3G405TS	171449.60
15036XT3G4445TS	825112.00
20012ET3G447T	171316.60
20012OT3G447/9T	171577.60
20018ET3G447T	170352.60
20018ET3G447T	————
20018OT3G445T	171523.60
20036ET3G447TS	171579.60
20036OT3G444TS	171573.60
250180P3G445T	G151524.60
25018ET3G447T	————
30018OP3G447/9T	G151525.60
35018OP3G447/9T	G151518.60
518OS1CCDOL184T	131622.00
EP3ESS56C	191414.00
PCJ105H	MT1052.00
PCJ107H	MT1072.00
PCJ110H	MT1102.00
PCJ115H	MT1152.00
PCJ120H	MT1202.00
PCQ105H	MST1052.00
PCQ107H	MST1072.00
PCQ110H	MST1102.00
PCQ120H	MST1202.00
PCQ150H	MST1152.00
PCQ120H	MST1202.00
PCQ150H	MST1152.00

*WEG is the trademark or trade name of WEG S.A. sociedades anônimas (s/a) and is not owned or controlled by Regal Beloit Corporation.

Always check cross reference motor design and outline information to determine suitability for direct replacement, at www.regalbeloit.com/Brands/LEESON

Cross Reference

AC Sub-FHP Gearmotor Cross Reference

PZ SERIES DC GEARMOTORS: Parallel Shaft

Output RPM	F.L. Torque (lb.in.)	Input HP	LEESON® Motor Catalogue No.	Cross Reference			
				Dayton®*	Bodine®*	Baldor®*	Bison®*
4	100	1/40	M1115002	6Z911	199	—	011-190-0362
			M1125046	—	—	—	—
10	100	1/20	M1115001	6Z912	198	GPP231108	011-190-0186
			M1125047	—	—	—	—
20	100	1/20	M1115000	6Z913	196	GPP232110	011-190-0096
			M1125048	—	—	GPP233120	—
30	100	1/17	M1125002	6Z914	190	GPP233112	011-190-0072
			M1125037	—	—	—	—
60	56	1/17	M1125003	6Z914	—	GPP233111	011-190-0025
			M1125036	—	—	GPP233121	—
100	36	1/17	M1125004	—	189	GPP12503	011-190-0019
			M1125035	—	—	—	—
150	24	1/17	M1125005	6Z916	188	—	011-190-0013
			M1125034	—	—	—	—
300	10	1/17	M1125006	—	157	—	011-190-0007
			M1125033	—	—	—	—

P300 SERIES DC GEARMOTORS: Parallel Shaft

Output RPM	F.L. Torque (lb.in.)	Input HP	LEESON® Motor Catalogue No.	Cross Reference			
				Dayton®*	Bodine®*	Baldor®*	Bison®*
5	353	1/20	M1115024	6A193	—	—	011-336-1369
9	268	1/20	M1115025	6A194	4147	GPP233141	011-336-1208
18	150	1/20	M1115026	4Z134	4146	GPP233140	011-336-1091
24	280	1/8	M1125069	4Z130	4156	—	011-336-2082
31	220	1/8	M1125070	4Z383	4155	GPP12547	011-336-2060
34	82	1/20	M1115027	4Z133	—	GPP233112	011-336-1053
51	130	1/8	M1125071	4Z129	4154	—	011-336-2036
51	55	1/20	M1115028	4Z132	—	GPP233111	011-336-1030
61	113	1/8	M1125072	4Z382	4154	GPP12545	011-336-2028
94	77	1/8	M1125073	4Z381	4153	GPP12544	011-336-2019
109	27	1/20	M1115029	4Z131	—	—	011-336-1017
170	43	1/8	M1125074	4Z128	4151	GPP12542	011-336-2011

P1100 SERIES DC GEARMOTORS: Parallel Shaft

Output RPM	F.L. Torque (lb.in.)	Ratio to 1	Input HP	LEESON® Motor Catalogue No.	Cross Reference	
					Dayton®*	Bison®*
8	1087	212	1/4	108700	6Z406	011-483-4197
12	1030	143	1/4	108701	6Z407	011-483-4131
18	750	95	1/4	108702	6Z408	011-483-4087
42	353	42	1/4	108703	6Z409	011-483-4041
60	238	29	1/4	108704	6Z410	011-483-4028
92	160	19	1/4	108705	6Z411	011-483-4018
135	105	13	1/4	108706	6Z412	011-483-4012
18	1112	95	1/2	108707*	6Z413	011-483-2087
33	882	53	1/2	108708*	6Z414	011-483-2058
42	705	42	1/2	108709*	6Z415	011-483-2041
60	476	29	1/2	108710*	6Z416	011-483-2028
92	320	19	1/2	108711*	6Z417	011-483-2018
135	210	13	1/2	108712*	6Z418	011-483-2012

* Indicates TEFC design, others are TENV

Application Notes:
P1100 DC gearmotors have the same mounting dimensions as Bison 483 gearmotors and Dayton gearmotors. For additional information, see Bulletin 1830.

This information is furnished as a guide only. Always check specific motor to determine suitability for direct replacement.

RIGHT-ANGLE DC GEARMOTORS

Output RPM	F.L. Torque (lb.in.)	Input HP	LEESON® Motor Catalogue No.	Cross Reference		
				Dayton®*	Bodine®*	Baldor®*
42	30	1/17	M1115018	—	99	—
62	35	1/17	M1115019	—	98	GP233003~
125	20	1/17	M1115020	—	96	GP233007~
250	11	1/17	M1115021	—	94	—
500	6	1/17	M1115022	—	93	—
42	80	1/8	M1135069	6A192	—	GP7403~
62	70	1/8	M1135038	4Z137	4144	GP7402~
			M1135058	—	6144	—
125	45	1/8	M1135039	—	4142 6142	—
250	25	1/8	M1135040	—	4141	—
500	13	1/8	M1135041	—	4140	—
62	135	1/4	M1135042	1L498	4138	GP7405~
			M1135062	—	—	GP7425~
83	125	1/4	M1135043	1L499	4137	GP7407~
			M1135063	—	—	GP7427~
125	90	1/4	M1135044	—	4136	—
250	50	1/4	M1135045	—	4135	—
500	30	1/4	M1135046	—	4134	—

~Mounting base and output shaft height are not 'drop-in' replacement.
Some Dayton and all Baldor right-angle gearmotors have double output shafts.

PE350 SERIES DC GEARMOTORS: Parallel Shaft

Output RPM	F.L. Torque (lb.in.)	Input HP	LEESON® Motor Catalogue No.	Baldor®*	Cross Reference		
					Bodine®*	Bison®*	Dayton®*
7	330	1/8	M1135106	GPP7459	4175	011-348-7215	6ML63
			M1135139	GPP7479	—	—	6ML64
14	341	1/8	M1135107	GPP7462	4174	011-348-7102	6ML65
			M1135140	GPP7478	—	—	6ML66
21	371	1/4	M1135117	GPP7457	4173	—	6ML67
			M1135141	GPP7477	—	—	6ML68
27	305	1/4	M1135115	GPP7461	—	—	6ML69
			M1135142	—	—	—	6ML70
42	280	1/4	M1135108	GPP7456	4185	011-348-7041	6ML71
			M1135143	GPP7476	—	—	6ML72
50	250	1/4	M1135109	GPP7460	—	011-348-7034	6ML73
			M1135144	—	—	—	6ML74
62	220	1/4	M1135110	GPP7455	4184	011-348-7029	6ML75
			M1135145	GPP7475	—	—	6ML51
83	155	1/4	M1135114	GPP7454	4183	—	6ML52
			M1135146	GPP7474	—	—	6ML53
125	100	1/4	M1135111	GPP7453	4182	—	6ML54
			M1135147	GPP7473	—	—	6ML55
165	70	1/4	M1135112	GPP7452	4181	—	6ML56
			M1135148	GPP7472	—	—	6ML57
250	45	1/4	M1135116	GPP7451	4180	—	6ML58
			M1135149	GPP7471	—	—	6ML59
500	25	1/4	M1135113	GPP7450	4179	—	6ML60
			M1135150	GPP7470	—	—	6ML61

The following rademarks or trade names are not owned or controlled by Regal Beloit Corporation.

*Baldor is believed to be the trademark or trade name of ABB Asea Brown Boveri, Ltd.

*Bison is believed to be the trademark or trade name of Bison Gear & Engineering Corporation.

*Bodine is believed to be the trademark or trade name of Bodine Electric Company.

*Dayton is believed to be a trademark or trade name of Dayton Electric Manufacturing Company.

Always check cross reference motor design and outline information to determine suitability for direct replacement, at www.regalbeloit.com/Brands/LEESON

PZ SERIES AC GEARMOTORS: Parallel Shaft

Output RPM	F.L. Torque (lb.in.)	Input HP	LEESON® Motor Catalogue No.	Cross Reference			
				Dayton®*	Bodine®*	Baldor®*	Bison®*
2	100	1/150	M1125050	6Z074	—	—	016-103-2362
9	100	1/15	M1125127*	6Z076	0449	GCP24114	016-103-2186
19	100	1/15	M1125128*	6Z081	0448	GCP24122	016-103-1096
28	100	1/15	M1125129*	6Z082	0455	GCP24124	—
57	56	1/15	M1125130*	6Z083	0454	GCP24134	016-103-1025
94	36	1/15	M1125131*	6A197	0453	—	016-103-1019
142	24	1/15	M1125132*	—	0452	—	016-103-1013
283	12	1/15	M1125133*	—	0451	—	—

∗ These motors are TEFC.

P240 SERIES AC GEARMOTORS: Parallel Shaft

Output RPM	F.L. Torque (lb.in.)	Input HP	LEESON® Motor Catalogue No.	Cross Reference			
				Dayton®*	Bodine®*	Baldor®*	Bison®*
8	345	1/15	M1145029	6Z816	0476	GCP24004	016-226-6215
15	250	1/15	M1145023	4Z518	0485	—	—
16	391	1/6	M1145030	6Z817	0485	—	016-226-6102
30	135	1/15	M1145024	4Z519	—	—	—
30	295	1/6	M1145031	6Z818	0484	—	016-226-6058
40	219	1/6	M1145032	6Z819	0483	GCP25052	016-226-6036
45	92	1/15	M1145025	4Z520	—	—	—
60	157	1/6	M1145033	6Z820	0482	GCP25054	016-226-6028
70	61	1/15	M1145026	4Z521	—	—	—
90	103	1/6	M1145034	6Z821	0481	GCP25056	016-226-6019
97	43	1/15	M1145027	4Z522	—	—	—
139	30	1/15	M1145028	4Z523	0480	—	—
156	60	1/6	M1145035	6Z822	—	GCP25060	016-226-6011

PE350 SERIES AC GEARMOTORS • SINGLE PHASE: Parallel Shaft

Output RPM	F.L. Torque (lb.in.)	Input HP	LEESON® Motor Catalogue No.	Cross Reference			
				Baldor®*	Bodine®*	Bison®*	Dayton®*
5	310	1/12	096000	—	0671	016-246-6254	6MK70
9	341	1/12	096001	—	0669	016-246-6170	6MK71
14	330	1/12	096002	GCP9320	0636*	—	6MK72
19	250	1/12	096003	GCP9322	0635*	016-246-6082	6MK73
29	270	1/6	096004	—	0685	016-246-6058	6MK74
34	250	1/6	096005	—	—	—	6MK75
40	180	1/6	096006	—	0654*	—	6MK76
59	135	1/6	096007	GCP3305	0683	016-246-6028	6MK77
75	90	1/6	096008	—	0681	016-246-6023	6MK78
113	68	1/6	096009	—	0651*	016-246-6015	6MK79
160	45	1/6	096010	GCP3315	0680	016-246-6011	6MK80
340	25	1/6	096011	GCP3320	0679	016-246-6005	6MK81

*Split Phase Type

PE350 HIGH TORQUE • SINGLE PHASE: Cap Start

Output RPM	F.L. Torque (lb.in.)	Input HP	LEESON® Motor Catalogue No.	Cross Reference			
				Baldor®*	Bodine®*	Bison®*	Dayton®*
58	320	1/3	096049	GLP3330	0664*	—	—
85	218	1/3	096050	GLP3332	0663*	—	—
173	109	1/3	096051	GLP3336	0662*	—	—
345	55	1/3	096052	GLP3338	0662*	—	—

*Split Phase Type

PE350 SERIES AC GEARMOTORS • THREE PHASE: Parallel Shaft

Output RPM	F.L. Torque (lb.in.)	Input HP	LEESON® Motor Catalogue No.	Cross Reference			
				Baldor®*	Bodine®*	Bison®*	Dayton®*
58	320	1/3	096013	GMP3330	0666	017-246-0029	6MK82
85	218	1/3	096014	GMP3332	0642	017-246-0019	6MK83
173	109	1/3	096015	GMP3336	0665	017-246-0011	6MK84
345	55	1/3	096016	GMP3338	—	017-246-0005	6MK85

This information is furnished as a guide only. Always check specific motor to determine suitability for direct replacement.

P1100 SERIES AC GEARMOTORS • SINGLE PHASE: Parallel Shaft

Output RPM	F.L. Torque (lb.in.)	Ratio to 1	Input HP	LEESON® Motor Catalogue No.	Cross Reference	
					Dayton®*	Bison®*
8	975	212	1/4	107000	6Z400	014-482-4211
12	1030	143	1/4	107004	6K351	014-482-4143
18	800	95	1/4	107003	6Z401	014-482-4095
26	569	66	1/4	107002	6K352	—
59	248	29	1/4	107005	6K353	014-482-4029
133	114	13	1/4	107001	6K354	014-482-4011
18	1089	95	1/3	107006	6Z402	014-482-3095
26	752	66	1/3	107012	6K396	014-482-3066
41	461	42	1/3	107011	2Z842	014-482-3042
59	330	29	1/3	107010	6K369	014-482-3029
91	224	19	1/3	107009	2Z843	014-482-3019
157	125	11	1/3	107008	2Z844	014-482-3011
288	70	6	1/3	107007	2Z845	014-482-3006
22	1105	79	1/2	107013	6Z403	—
41	700	42	1/2	107017	6K375	014-482-2042
59	496	29	1/2	107016	6K583	014-482-2029
91	336	19	1/2	107015	6K383	014-482-2019
133	229	13	1/2	107014	6K506	014-482-2011

Bison units are split phase design.

P1100 SERIES AC GEARMOTORS • THREE PHASE: Parallel Shaft

Output RPM	F.L. Torque (lb.in.)	Ratio to 1	Input HP	LEESON® Motor Catalogue No.	Cross Reference	
					Dayton®*	Bison®*
18	1089	95	1/3	107025	6Z404	—
26	752	66	1/3	107026	4Z384	—
41	461	42	1/3	107027	4Z385	—
59	330	29	1/3	107028	4Z386	—
91	224	19	1/3	107029	4Z387	—
157	125	11	1/3	107030	4Z388	—
288	70	6	1/3	107031	4Z389	—
22	1105	79	1/2	107032	6Z405	017-482-0095
41	700	42	1/2	107033	4Z390	017-482-0042
59	496	29	1/2	107034	4Z391	017-482-0029
91	336	19	1/2	107035	4Z392	017-482-0019
133	229	13	1/2	107036	4Z393	017-482-0011
288	100	6	1/2	107037	4Z394	017-482-0006

Application Notes:
P1100 AC gearmotors have the same mounting dimensions as Bison 482 gearmotors and Dayton gearmotors. For additional information, see Bulletin 1830.

RIGHT-ANGLE AC GEARMOTORS

Output RPM	F.L. Torque (lb.in.)	Input HP	LEESON® Motor Catalogue No.	Cross Reference			
				Dayton®*	Bodine®*	Baldor®*	Bison®*
28	37	1/15	M1125080	IL536	0492	—	—
43	34	1/15	M1125081	IL538	0491	GC24310~	—
58	40	1/15	M1125082	IL535	0487	—	—
85	24	1/15	M1125083	IL534	0490	GC24306~	—
173	14	1/15	M1125084	IL533	0488	GC24302~	—
29	110	1/6	M1145037	IL501	—	—	—
43	113	1/6	M1145038	IL502	0678	GC25020~	—
57	95	1/6	M1145082	IL503	—	GC25015~	026-756-8030
83	75	1/6	M1145039	IL504	0677	GC25010~	026-756-8020
170	43	1/6	M1145040	IL505	0672	—	026-756-8010
340	23	1/6	M1145041	—	0670	—	026-756-8005

~Mounting base and output shaft height are not 'drop-in' replacement.
Some Dayton and all Baldor right-angle gearmotors have double output shafts.

The following trademarks or trade names are not owned or controlled by Regal Beloit Corporation.

*Baldor is believed to be the trademark or trade name of ABB Asea Brown Boveri, Ltd.

*Bison is believed to be the trademark or trade name of Bison Gear & Engineering Corporation.

*Bodine is believed to be the trademark or trade name of Bodine Electric Company.

*Dayton is believed to be a trademark or trade name of Dayton Electric Manufacturing Company.

Canada Catalogue Number Index

LEESON® Motors, Sub-FHP Gearmotors, Drives and Accessories

Catalogue No.	Availability	Model No.	Page No.
970.576	√	970.576	185, 202
970.577	√	970.577	185, 202
970.600	√	970.600	185, 202
970.601	√	970.601	185, 202
970.620	√	970.620	185, 202
970.621	√	970.621	185, 202
980.143	√	980.143	185, 202
980.159	√	980.159	185, 202
980.549	√	980.549	185, 202
003042.02	√	————	239
003042.04	√	————	239
003042.05	√	————	239
003042.06	√	————	239
003043.01	√	————	239
003043.05	√	————	239
4406	√	5KH32FN5586X	78
4725	√	5KH32DN5587X	78
4805	√	5KH32GNB811X	78
006707.01	-	————	269
006708.01	-	————	269
021247.25	√	————	279
021292.05	√	————	279
021341.01	√	————	279
021343.01	√	————	279
092011.00	C/A	C42C34NB1	29
092012.00	C/A	C42C17NB1	29
092013.00	C/A	C42C34NB2	29
092014.00	√	C42T34NB2	56
092015.00	√	C42T17NB1	56
092016.00	√	C42T34NB3	56
092111.00	√	C42C17FB3	23
092112.00	√	C42C34FB3	23
092114.00	√	C42C17FB2	23
092116.00	√	C42C17FB1	23
096000.00	√	C42P17NZ1	233
096001.00	√	C42P17NZ2	233
096002.00	√	C42P17NZ3	233
096003.00	√	C42P17NZ4	233
096004.00	√	C42P17FZ1	233
096005.00	√	C42P17FZ2	233
096006.00	C/A	C42P17FZ3	233
096007.00	√	C42P17FZ4	233
096008.00	√	C42P17FZ5	233
096009.00	√	C42P17FZ6	233
096010.00	C/A	C42P17FZ7	233
096011.00	√	C42P17FZ8	233
096013.00	√	C42T17FZ14	233
096014.00	√	C42T17FZ15	233
096015.00	√	C42T17FZ16	233
096016.00	√	C42T17FZ17	233
096049.00	√	C42C17FZ4	233
096050.00	√	C42C17FZ5	233
096051.00	√	C42C17FZ6	233
096052.00	C/A	C42C17FZ7	233
096065.00	√	C42T17FZ34	241

Catalogue No.	Availability	Model No.	Page No.
096066.00	√	C42T17FZ29	241
096067.00	√	C42T17FZ30	241
096068.00	√	C42T17FZ31	241
096069.00	√	C42T17FZ32	241
096070.00	√	C42T17FZ33	241
098000.00	√	C42D17FK1	188
098002.00	√	C42D17FK2	188
098003.00	√	C42D17FK3	188
098004.00	√	C42D17FK4	188
098005.00	√	C42D17FK5	188
098006.00	√	C42D28FK1	188
098007.00	√	C42D28FK2	188
098008.00	√	C42D17FK6	188
098009.00	√	C42D28FK3	188
098010.00	√	C42D28FK4	188
098014.00	√	CI42D17FT1	181, 195
098015.00	√	CI42D17FT2	181, 195
098016.00	√	CI42D34FT1	181, 195
098017.00	√	CI42D34FT2	181, 195
098032.00	√	C42D17FK7	188
098040.00	C/A	CI42D17VD1	89, 191
098065.00	√	CI42D17FT6	184, 200
098066.00	√	CI42D34FT7	184, 200
098067.00	√	CI42D17FT7	184, 200
098069.00	√	C42D17FK11	188
098375.00	C/A	C42D17VK1	89, 191
098376.00	C/A	C42D17VK2	89, 191
098377.00	√	C42D17FC29	189
098378.00	√	C42D17FC30	189
098379.00	√	C42D17FC31	189
098380.00	√	C42D17FC32	189
098381.00	√	C42D18FK6	198
098382.00	√	C42D18FK7	198
100000.00	D	A4C17DH1	15
100001.00	D	A4C17DH2	15
100002.00	D	A4C17DH3	15
100003.00	D	A4C17DH4	15
100004.00	D	M4C17DH5	15
100007.00	D	C4C17DH8	15
100008.00	D	C4C17DH9	15
100010.00	√	A4C17DJ2	133
100011.00	√	A4C17DJ3	133
100012.00	√	A4C17DJ4	134
100015.00	√	C4C17DJ6	133
100018.00	D	M4C17DC2	18
100019.00	D	M4C17DC3	18
100020.00	D	A4C17DC4	18
100021.00	D	M4C17DC5	18
100023.00	D	C4C17DC7	18
100024.00	D	C4C17DC8J	18
100025.00	D	C4C17DC9J	18
100029.00	D	C4T17DH3E	33
100045.00	√	M4C17DJ17	133
100046.00	√	M4C17DJ18	134
100047.00	√	M4C17DJ19	134

Catalogue No.	Availability	Model No.	Page No.
100048.00	D	C4T17DC1	38
100049.00	D	C4T17DC2F	38
100050.00	D	C4T17DC3F	38
100052.00	D	M4C34DH2	15
100053.00	√	M4C34DH3	155
100054.00	D	A4C34DC1	18
100055.00	D	A4C34DC2	18
100063.00	√	A4C17DJ9	133
100064.00	√	A4C17DJ10	133
100065.00	√	A4C17DJ11	134
100109.00	√	A4C17DR1	133
100110.00	√	A4C17DR2	133
100111.00	√	A4C17DR3	133
100115.00	D	A4C17DB1	15
100116.00	D	A4C17DB2	15
100123.00	√	C4T17NB3	56
100141.00	D	C4T17DH5C	41
100143.00	D	C4T17DH6C	41
100153.00	D	C4T17DH7C	41
100204.00	√	A4C34DC4H	73
100205.00	√	A4C34DC5J	73
100207.00	√	A4C34DC7J	73
100208.00	√	A4C34DC8H	73
100336.00	D	C4C34DH11	15
100337.00	D	C4C34DH12	15
100338.00	D	C4C17DB12	15
100355.00	D	A4C34DC12	18
100361.00	√	C4C17NB4	29
100362.00	√	C4C34NB2	29
100366.00	√	C4C34NB3	29
100443.00	√	C4T17NB5	56
100449.00	√	C4T34NC4	52
100510.00	√	C4T17NB7B	57
100511.00	√	C4T17NB8E	57
100588.00	D	M4C17DH46	15
100603.00	√	A4C34DJ7	134
100604.00	√	A4P11NH1	124, 138
100699.00	√	A4P17NB7	124, 138
100700.00	√	A4P17NB8	124, 138
100701.00	√	A4P17NB9	124, 138
100704.00	√	M4P17DC7	159
100722.00	√	A4C34DC21F	73
100723.00	√	A4C34DC22E	73
100767.00	√	A4P17NJ1	124, 138
100768.00	√	A4P17NJ2	124, 138
100796.00	√	A4T17DJ10	136
100803.00	√	A4P17NR1	124, 138
100804.00	√	A4P17NR2	124, 138
100805.00	√	A4P11NJ1	124, 138
100806.00	√	A4P11NJ2	124, 138
100824.00	√	A4P11NR2	124, 138
100825.00	√	A4P11NR3	124, 138
100828.00	√	C4T17DJ11C	137
100829.00	√	C4T17DJ12C	137
100905.00	√	C4T34FB2D	47

Canada Catalogue Number Index

LEESON® Motors, Sub-FHP Gearmotors, Drives and Accessories

Catalogue No.	Availability	Model No.	Page No.
100908.00	√	A4T17DJ13	136
100913.00	√	C4T17FH1D	47
100955.00	√	C4C17FB3	23
100956.00	√	C4C17FB4	23
100960.00	√	C4T34FB3	47
100961.00	√	C4T17FB4C	47
101013.00	√	C4T34NB3	56
101015.00	√	A4C17DR31	133
101020.00	√	C4S46DR1	139
101021.00	√	C4S46DJ1	139
101050.00	√	C4T17FH2B	57
101051.00	√	C4T17FH3C	57
101052.00	√	C4T17FH4C	57
101053.00	√	C4C17FH4F	23
101079.00	√	C4T17FH6C	47
101176.00	√	A4K17NH2	124, 138
101248.00	√	C4T17FC3D	61
101252.00	√	A4P17NB27	124, 138
101253.00	√	A4P17NB28	124, 138
101291.00	√	C4T11NC1	52
101405.00	√	A4K17DR5	135
101423.00	D	M4C17DB33	15
101431.00	√	A4C34DR11	133
101432.00	√	A4C34DR10	133
101433.00	√	A4C34DR9	134
101434.00	√	A4C34DR8	133
101446.00	√	M4C17FB10	23
101520.00	√	A4T17DJ18	136
101521.00	D	A4C17DC79	18
101522.00	D	A4C17DC81	18
101523.00	D	56317DRC7003A3A	18
101544.00	C/A	M4K17DH2	155
101585.00	√	A4K17DR6	135
101602.00	√	A4K17DR7	135
101611.00	√	A4C17DJ57	133
101637.00	√	C4T34DC20	75
101638.00	√	C4T34DC21	75
101639.00	√	A4T34DJ4D	136
101640.00	√	A4T34DJ3	136
101641.00	√	A4T34DJ5	136
101645.00	√	A4P11NR6	138
101646.00	√	C4T17FB9C	47
101647.00	√	C4T17FB10C	47
101648.00	√	C4T17NC28	52
101649.00	√	C4T17NH8	56
101668.00	√	C4T17FH9D	57
101765.00	√	C4C17FC10	26
101766.00	√	C4C17FC9	26
101767.00	√	C4T17FC9	52
101769.00	√	C4T17FC10	52
101775.00	√	C4T34DK6	75
101776.00	√	C4T34DK5	75
101780.00	√	C4T17FC12	52
101781.00	√	C4C17DH106	158
101782.00	C/A	C4C34DB15	158

Catalogue No.	Availability	Model No.	Page No.
101839.00	√	A4C17DJ67	134
101908.00	√	C4T17FC16B	61
101922.00	√	C4T17FC17B	61
101965.00	√	C4T34NC11	52
101966.00	√	C4T17NC35	52
101981.00	√	C4T17FC19	52
102012.00	√	C4C17FB23	23
102013.00	√	C4C11FB3	23
102014.00	√	C4C17FB21	23
102015.00	√	C4C11FB4	23
102016.00	√	C4C34FB10	23
102017.00	√	M4P17DC29	159
102018.00	√	M4C17FB22	23
102019.00	√	C4C11FB5	23
102020.00	√	C4C34FB9	23
102021.00	D	M4P17DC30	159
102024.00	√	C4T17FK2	54
102183.00	√	C4T14FH1	149
102184.00	√	C4T14FC2	150
102197.00	C/A	C4T34DC25	75
102198.00	√	C4T34DC26	75
102199.00	√	C4T34DK8	75
102661.00	√	C4C17FC25	26
102662.00	√	C4T17FC31	52
102663.00	√	C4C17FC26	26
102664.00	√	C4T17FC30	52
102665.00	C/A	C4C17FC27	26
102684.00	√	C4T34FB5B	47
102685.00	√	C4T14FB4	149
102686.00	√	C4T28FB2	149
102687.00	√	C4T28FC2	150
102688.00	√	C4T14FB5	149
102689.00	√	C4T14FC4	150
102690.00	C/A	C4T28FB1	149
102691.00	√	C4T28FC1	150
102692.00	√	C4T14FB3	149
102693.00	√	C4T14FH2	149
102694.00	√	C4T14FC3	150
102696.00	√	C4T17FC33	52
102697.00	√	C4T17FK5	54
102860.00	√	C4T17FC40	52
102861.00	√	C4T17NC46	52
102862.00	√	C4C17FC32	26
102863.00	√	C4T17NC47	52
102864.00	√	C4C34FC12	26
102865.00	√	M4C17FC33	26
102866.00	√	C4C17FC34	26
102867.00	√	C4C17NC25	26
102868.00	√	C4C17NC26	26
102869.00	√	M4C17NC27	26
102870.00	√	C4C34FC13	26
102871.00	√	A4C17FC35	26
102872.00	√	M4C34FC14	26
102903.00	√	C4C34FK17	28
102904.00	√	M4C34FH7	23

Catalogue No.	Availability	Model No.	Page No.
102905.00	√	C4C34FH8	23
102906.00	√	C4C17FH28	23
102907.00	√	C4C17FK5	28
102908.00	√	A4C17FH29	23
102909.00	√	M4C17FH30	23
102910.00	√	C4C17NK2	28
102911.00	√	A4C17NH6	29
102912.00	√	C4C17NH7	29
102913.00	C/A	M4C17NH8	29
102914.00	√	C4C17NH9	29
102915.00	√	A4C17NH10	29
102916.00	√	C4C17FK4	28
102917.00	√	C4T17FK10	54
102918.00	√	C4T17NH12	56
102919.00	√	C4T17NK2	54
102920.00	√	C4T17NH13	56
102921.00	√	C4T17NK3	54
102922.00	√	C4T17FK11	54
102929.00	√	C4C34FK16	28
102930.00	√	C4C17FK6	28
102931.00	√	C4C17FH31	23
102932.00	√	A4C17FH32	23
102933.00	√	M4C17FH33	23
102963.00	√	A4C17DR47	133
102964.00	√	A4C17DJ72	133
102965.00	√	A4C17DJ74	133
102966.00	√	A4C17DJ73	134
103014.00	D	C4T17DC47	38
103017.00	D	C4T17DH39A	33
103019.00	√	C4T17FH12A	47
103020.00	√	C4T17FH13A	47
103082.00	√	M4C17FK7	28
103085.00	√	M4C17FK8	28
103387.00	√	CZ4T17VK2	108
103388.00	√	CZ4T17WK1	108
103389.00	√	CZ4T17VC4	109
103390.00	√	CZ4T17WC1	109
103393.00	C/A	CZ4T17VC7	109
103394.00	√	CZ4T17VC3	109
103411.00	√	CZ4T17TK1	115
103412.00	√	CZ4T17UK1	115
103413.00	√	CZ4T17TC1	116
103414.00	C/A	CZ4T17UC1	116
103417.00	√	CZ4T17TC2	116
103418.00	√	CZ4T17TC3	116
103449.00	√	C4C17FZ60A	178
103450.00	√	C4C17FZ61A	178
103451.00	√	C4C17FZ62A	178
103723.00	√	C4T17DC50	75
103724.00	√	C4T17DC51	75
103725.00	√	C4T17DC52	75
103726.00	√	C4T17DK12	75
103727.00	√	C4T17DK13	75
103756.00	C/A	56PNRA20202A	64
103757.00	C/A	56PNRA20203A	64

Canada Catalogue Number Index

LEESON® Motors, Sub-FHP Gearmotors, Drives and Accessories

Catalogue No.	Availability	Model No.	Page No.
103758.00	C/A	56PNRA20204A	64
103759.00	C/A	56PNRA20205A	64
103760.00	C/A	56PNRA20206A	64
103761.00	C/A	56PNRA20208A	64
103782.00	√	A4P17NZ131	141
103783.00	√	A4P17NZ132	141
103795.00	√	A4S17DR69	142
103796.00	√	A4S17DR70	142
103797.00	√	A4S17DR71	142
104008.00	C/A	56PNRA20207A	64
107000.00	√	C4C17FZ24	235
107001.00	√	C4C17FZ25	235
107002.00	√	C4C17FZ26	235
107003.00	√	C4C17FZ27	235
107004.00	√	C4C17FZ28	235
107005.00	√	C4C17FZ29	235
107006.00	√	C4C17FZ30	235
107007.00	√	C4C17FZ31	235
107008.00	√	C4C17FZ32	235
107009.00	√	C4C17FZ33	235
107010.00	√	C4C17FZ34	235
107011.00	√	C4C17FZ35	235
107012.00	√	C4C17FZ36	235
107013.00	√	C4C17FZ37	235
107014.00	√	C4C17FZ38	235
107015.00	√	C4C17FZ39	235
107016.00	√	C4C17FZ40	235
107017.00	√	C4T17FZ41	235
107025.00	√	C4T17FZ47	235
107026.00	√	C4T17FZ53	235
107027.00	√	C4T17FZ54	235
107028.00	√	C4T17FZ55	235
107029.00	√	C4T17FZ56	235
107030.00	√	C4T17FZ57	235
107031.00	√	C4T17FZ58	235
107032.00	√	C4T17FZ48	235
107033.00	√	C4T17FZ49	235
107034.00	√	C4T17FZ50	235
107035.00	√	C4T17FZ51	235
107036.00	√	C4T17FZ52	235
107037.00	√	C4T17FZ46	235
108014.00	√	C4D17FK1	188
108015.00	√	C4D17FK2	188
108016.00	√	C4D28FK3	188
108017.00	√	C4D28FK4	188
108018.00	√	C4D17FK3	188
108019.00	√	C4D17FK4	188
108020.00	√	C4D28FK5	188
108021.00	√	C4D28FK6	188
108022.00	√	C4D17FK5	188
108023.00	√	C4D17FK6	188
108045.00	√	C4D17NK5	198
108046.00	√	C4D17NK6	198
108047.00	√	C4D17NK7	198
108048.00	√	C4D17FK7	198

Catalogue No.	Availability	Model No.	Page No.
108050.00	√	C4D17NK9	198
108051.00	√	C4D17NK10	198
108052.00	√	C4D17FK8	198
108053.00	√	C4D17FK9	198
108092.00	√	C4D17FK10	188
108226.00	√	C4D17VK1	89, 191
108227.00	√	C4D17VK2	89, 191
108228.00	√	C4D17VK3	89, 191
108229.00	√	C4D17VK4	89, 191
108230.00	√	C4D17WK1	89, 191
108231.00	√	C4D17WK2	89, 191
108232.00	√	C4D17WK3	89, 191
108262.00	√	C4D17FK19	188
108265.00	√	C4D28FK11	188
108266.00	√	C4D28FK12	188
108322.00	√	C4D17FK28	198
108369.00	√	C14D17FT1	181, 195
108370.00	√	C14D17FT2	181, 195
108371.00	√	C14D17FT3	181, 195
108372.00	√	C14D34FT1	181, 195
108373.00	√	C14D34FT2	181, 195
108407.00	D	CI4D17VD1	89, 191
108423.00	√	C4D17VK9C	89, 191
108424.00	√	C4D17VK10	89, 191
108455.00	√	CI4D17FT6	184, 200
108456.00	√	CI4D34FT5	184, 200
108457.00	√	CI4D34FT6	184, 200
108458.00	√	CI4D34FT7	184, 200
108502.00	√	C182D17FK2	188
108700.00	√	CM4D17NZ17	217
108701.00	√	CM4D17NZ18	217
108702.00	√	CM4D17NZ19	217
108703.00	√	CM4D17NZ20	217
108704.00	√	CM4D17NZ21	217
108705.00	√	CM4D17NZ22	217
108706.00	√	CM4D17NZ23	217
108707.00	√	CM4D17FZ23	217
108708.00	√	CM4D17FZ24	217
108709.00	√	CM4D17FZ25	217
108710.00	√	CM4D17FZ26	217
108711.00	√	CM4D17FZ27	217
108712.00	√	CM4D17FZ28	217
108729.00	√	CM4D17NZ43	217
108730.00	√	CM4D17NZ44	217
108731.00	√	CM4D17FZ52	217
108732.00	C/A	CM4D17FZ53	217
109065.00	√	C4D17VK24A	111, 203
109066.00	√	C4D17VK25A	111, 203
109067.00	√	C4D17VK26A	111, 203
109068.00	√	CI4D17VK27A	112, 204
109069.00	√	C4D17WK9A	111, 203
109070.00	√	C4D17WK10A	111, 203
109071.00	√	CI4D17WK11A	112, 204
109072.00	√	C4D17WK13A	111, 203
109073.00	√	C4D17WK14A	111, 203

Catalogue No.	Availability	Model No.	Page No.
109074.00	√	CI4D17WK15A	112, 204
109075.00	√	C4D17WK16A	111, 203
109076.00	√	C4D17WK17A	111, 203
109077.00	√	CI4D17WK18A	112, 204
109078.00	√	C4D17VC5A	111, 203
109079.00	√	C4D17VC6A	111, 203
109080.00	√	C4D17VC7A	111, 203
109081.00	√	CI4D17VC8A	112, 204
109082.00	√	C4D17WC2A	111, 203
109083.00	√	C4D17WC3A	111, 203
109084.00	√	CI4D17WC4A	112, 204
109085.00	√	C4D17WC5A	111, 203
109086.00	√	C4D17WC6A	111, 203
109087.00	√	CI4D17WC7A	112, 204
109088.00	√	C4D17WC8A	111, 203
109089.00	√	C4D17WC9A	111, 203
109090.00	√	CI4D17WC10A	112, 204
109096.00	√	C4D17FC42	189
109097.00	√	C4D17FC43	189
109098.00	C/A	C4D11FK5	188
109099.00	√	C4D11FK6	188
109100.00	√	C4D11FK7	188
109101.00	√	C4D18FK1	198
109102.00	√	C4D18FK2	198
109103.00	√	C4D18FK3	198
109104.00	√	C4D18FK4	198
109105.00	√	C4D18FK5	198
109106.00	√	C4D18FK6	198
109107.00	√	C4D18FK7	198
109108.00	√	C4D18FK8	198
109296.00	√	C4D18VK37	199
109297.00	√	C4D18VK38	199
109298.00	√	C4D18VK39	199
109299.00	√	C4D18VK40	199
109300.00	√	C4D18WK16	199
109301.00	√	C4D18WK17	199
109302.00	√	C4D18WK18	199
109303.00	√	C4D18WK19	199
109304.00	√	C4D18WK20	199
110000.00	D	A6C17DB1	16
110004.00	D	C6C17DB2	16
110005.00	D	C6K17DB1H	16
110006.00	D	P6K17DB2	16
110007.00	√	A6C17DR1	134
110009.00	√	C6C11FB1	23
110011.00	√	C6C11FB2	23
110013.00	√	C6C17FB2	24
110017.00	√	A6C17FB4	24
110018.00	√	A6C17FB5	24
110019.00	√	U6K17FB1	24
110022.00	√	M6C17FB7	24, 155
110023.00	√	M6C17FB8	24, 155
110025.00	√	A6C17FR1	135
110026.00	√	A6C17FR2	135
110034.00	√	C6T17FB1	47

Canada Catalogue Number Index

LEESON® Motors, Sub-FHP Gearmotors, Drives and Accessories

Catalogue No.	Availability	Model No.	Page No.
110035.00	D	C6T17FB2E	48
110036.00	D	M6C17DC1	18
110040.00	√	M6C17FC2	26
110041.00	√	M6C17FC3	27
110042.00	√	M6K17FC1	27
110047.00	√	C6T17FC1	52
110054.00	√	A6C17DR2	134
110057.00	√	C6C17FC6	26
110058.00	√	C6C17FC7	27
110059.00	√	C6C34FB5	24
110064.00	√	C6C14FB1	148
110065.00	√	C6C14FB2	148
110066.00	√	C6C14FB3	148
110086.00	√	M6C17FB11	121
110087.00	√	M6C17FB9	121
110088.00	√	M6C17FB10	121
110089.00	√	M6K17FB3	121
110090.00	√	M6K17FB4	121
110094.00	√	C6C34FB6	24
110097.00	√	M6C34DB3	155
110108.00	√	M6C34FB7	24, 155, 157
110109.00	√	M6C34FB8	24, 155, 157
110110.00	D	M6C34DB4	16
110112.00	√	C6T34FC6	53
110142.00	√	M6C34FB2	24, 155, 157
110143.00	√	C6T34NB1	56
110144.00	√	C6T34NC1	52
110160.00	√	M6C34DB6	153
110161.00	√	P6C34DB7	153
110163.00	√	C6T11FC1	52
110167.00	D	M6C17DB7	16
110176.00	√	C6T17NC10G	61
110177.00	√	C6T17FC7G	61
110178.00	√	C6T17FB3E	57
110179.00	D	C6T17DC6E	44
110180.00	√	C6C34FK1	28
110181.00	√	C6T34FK1	54
110182.00	C/A	C6T34NK1E	54
110199.00	√	C6T17NB4E	57
110202.00	D	C6T17DB2D	41
110204.00	D	C6T17FC8G	61
110206.00	D	C6T17FB4E	57
110209.00	√	C6C17FB17	24
110214.00	√	C6T11FB1F	57
110220.00	D	C6C17DC3	18
110222.00	√	M6C34DB13	153
110232.00	√	M6C34DB11	153
110253.00	√	C6K17FB9	24
110275.00	√	C6T11FB3	47
110276.00	√	C6C34FB15	24
110288.00	√	U6C34DC18G	73
110289.00	√	U6C34DC19G	73
110308.00	√	A6C17FC8	26
110313.00	√	C6T34FB2	47
110352.00	√	C6C34FB21	25
110353.00	√	C6T11FB2	47
110354.00	√	C6T34FB8E	57
110362.00	D	P6C34DB21	16
110363.00	D	C6C34DB22	16
110394.00	√	C6C14DB5	147
110395.00	√	C6C14DB6	147
110396.00	√	C6C14DB7	147
110397.00	√	C6C14DB8	147
110398.00	√	C6K14DB1	147
110400.00	√	C6K11FB1	24
110402.00	√	P6C34FB23	25, 155, 157
110411.00	√	C6C11FC1	26
110412.00	√	M6C34FC7	26
110413.00	√	C6C34FC8	26
110414.00	√	C6K11FC2	26
110415.00	√	M6C34FC9	27
110416.00	√	C6C34FC10	27
110418.00	√	M6C34FC11	27
110419.00	√	C6C34FC12	27
110420.00	√	C6K17FC2	27
110421.00	√	P6C34FC13	27
110422.00	√	C6C34FC14	27
110423.00	√	C6C14FB6	148
110424.00	√	C6K14FB1	148
110425.00	D	C6T11DB3D	33
110429.00	D	C6T34DB2E	33
110441.00	√	C6T11FB5E	47
110446.00	√	C6T34NC2	52
110448.00	√	C6T34FC9	52
110451.00	D	C6T17FC9H	53
110478.00	√	A6C34DR6	134
110479.00	√	A6C34DR7	134
110492.00	√	M6C17FC12	122
110493.00	√	M6C17FC13	122
110494.00	√	M6C17FC14	122
110495.00	√	M6K17FC3	122
110579.00	√	A6K17DR6	134
110669.00	√	C6T17NK1	164
110670.00	√	C6T17NK2	164
110671.00	√	C6T17NK3	164
110702.00	D	C6T11DB4C	41
110703.00	D	C6T11DB6D	41
110704.00	√	C6T11FB6D	57
110705.00	D	C6T11DB7D	41
110708.00	√	C6T17NK4H	164
110709.00	√	C6T17NK5G	164
110710.00	√	C6T17NK6G	164
110711.00	√	C6T17NC45G	61
110714.00	√	C6T34NB6D	57
110715.00	√	C6T34FB15E	57
110745.00	D	C6T34FB16F	48
110852.00	√	A6C17XC20	68
110893.00	D	C6T17FB37G	57
110905.00	√	C6C17FK4	28
110908.00	√	C6C17FK5	28
110909.00	√	C6C34FK19	28
110910.00	√	C6K17FK2	28
110914.00	√	C6T11FK1	54
110915.00	√	C6T34FK6	54
110916.00	√	C6T17FK5	54
110934.00	√	A6C17XB21	68
110956.00	D	C6T17NB24B	57
110961.00	√	A6C17XB20	68
111074.00	√	A6C17EB20	68
111075.00	√	A6C17EC20	68
111080.00	√	M6P17DR1G	159
111084.00	√	A6C17XB22	68
111085.00	√	A6C17XC22	68
111086.00	√	A6C17XC21	68
111095.00	√	A6C34EC20	68
111096.00	√	A6C34XC20	68
111097.00	√	A6C34XC21	68
111098.00	√	A6C34XC22	68
111157.00	√	A6T17EK4H	71
111160.00	D	A6T17XK8H	71
111202.00	C/A	A6P17NZ1	124, 138
111214.00	√	U6T17EK5G	71
111216.00	√	A6T17XK9H	71
111266.00	√	A6P17NR1	124, 138
111267.00	√	A6P17NR2	124, 138
111275.00	√	P6K34DB5	153
111310.00	D	A6T17DB127F	34
111311.00	√	A6T17DR11	136
111321.00	√	A6P11NR1	124, 138
111322.00	√	A6P11NR2	124, 138
111323.00	√	A6P17NR3	138
111324.00	√	A6P17NR4	124, 138
111332.00	√	C6C34NB15	125, 140
111333.00	√	C6C34NB16	125, 140
111334.00	√	C6T34NB18	140
111335.00	√	C6T34NB19	140
111348.00	√	A6P17NZ6	124, 138
111393.00	√	C6T17DR13D	137
111394.00	√	C6T11FB8E	57
111444.00	D	C6T17FC39J	61
111611.00	D	C6T34FC26G	61
111915.00	√	A6C17FR10	135
111916.00	D	C6T34FB24E	49
111917.00	√	C6T17NR1C	56, 136
111919.00	√	A6P8NR2	124, 138
111923.00	√	A6T17XB21	69
111929.00	√	A6T17EB21	69
111930.00	√	A6T17EC22	70
111931.00	√	A6T17EC23	70
111932.00	√	A6T17EB22	69
111933.00	√	A6T34EC22	70
111934.00	C/A	A6T34EB22	69
111935.00	√	A6T17XC23	70
111936.00	√	A6T34XC21	70
111937.00	√	A6T34XB21	69

Canada Catalogue Number Index

LEESON® Motors, Sub-FHP Gearmotors, Drives and Accessories

Catalogue No.	Availability	Model No.	Page No.
111938.00	√	A6T11XB22	69
111940.00	√	A6T11EB21	69
111944.00	√	A6T34EC23	70
111949.00	√	C6C34NB19	125, 140
111950.00	√	C6C17FK20	164
111951.00	√	C6K17FK21	164
111953.00	√	C6S46DR1	139
111954.00	√	C6C46DR2	139
111955.00	√	C6K46DR1	139
111956.00	√	C6T46DR1	139
111957.00	C/A	C6T46DR2	139
111958.00	√	C6T46DR3	139
111959.00	C/A	C6T46DR4	139
111960.00	√	C6T46DR5	139
111961.00	√	C6T46DR6	139
111962.00	√	C6T46DR7	139
111963.00	√	C6T46DR8	139
112101.00	D	A6T17XK20F	71
112135.00	√	C6C34FK36	28
112136.00	√	C6K17FC9	27
112378.00	√	C6T11FC10	52
112429.00	√	C6T17WK1	86
112430.00	√	C6T17WK2	86
112431.00	√	C6C17WB1	85
112432.00	√	C6C17WB2	85
112483.00	√	C6T17WK3	87
112484.00	√	C6T17WK4	87
112520.00	√	C6T17WK5	87
112521.00	√	C6T17WK6	87
112523.00	√	C6T17WK8	86
112526.00	√	C6C17WK2	85
112527.00	√	C6C17WK3	85
112528.00	√	C6C17WK4	85
112529.00	√	C6C17WK5	85
112547.00	√	C6T17WK9	86
112626.00	√	C6C17WB3	85
113028.00	√	C6T34FK34	76
113029.00	√	C6T34FK35	76
113256.00	√	M6C17FB66	121
113266.00	√	M6K17DB30	155
113281.00	√	P6K17DK12	156
113290.00	√	M6C17FC59	122
113300.00	√	C6C17WK6	85
113311.00	√	C6T11FC16	52
113333.00	√	M6K17FB32	24, 155
113334.00	D	P6C34DC50	19
113337.00	D	A6C34DC53	18
113373.00	√	C6K46DR3	139
113580.00	√	C6C34WK2	85
113581.00	√	C6C34WK3	85
113582.00	√	C6C34WK4	85
113583.00	√	C6C34WK6	85
113584.00	√	C6C34WK5	85
113586.00	√	C6T17VK2	86
113587.00	√	C6T17VK1	86

Catalogue No.	Availability	Model No.	Page No.
113588.00	√	C6T34VK3	86
113589.00	√	C6T34VK2	86
113590.00	√	C6T34VK4	86
113591.00	√	C6T34VK5	86
113608.00	√	A6K17DR28	134
113627.00	√	M6C34FB63	157
113630.00	√	M6K17DB33	155
113631.00	√	M6K34DB15	155
113632.00	√	P6K34DB16	155
113633.00	√	U6C34DR21	134
113637.00	√	A6C34FK49	74
113638.00	√	A6C34FK50	74
113639.00	√	A6C34FC41	74
113640.00	√	A6C34FC42	74
113641.00	√	U6C34FC34	74
113642.00	√	M6P17DR4F	159
113643.00	√	C6S46DR2	139
113672.00	√	C6C46DR5	139
113700.00	√	M6K17DK15	156
113765.00	√	M6K17FB33	23
113766.00	√	M6K17FB34	23
113767.00	√	M6K17FB35	24
113768.00	√	M6K17FB36	24
113769.00	√	M6K17FB37	24
113770.00	√	M6K17FB38	25
113846.00	√	A6T17DR25	136
113847.00	√	A6T17DR26	136
113859.00	√	C6T17FB71F	57
113891.00	√	C6T34DC64	75
113892.00	√	C6T34DC65	75
113893.00	√	C6T34DC66	75
113895.00	√	A6T34DR30	136
113896.00	√	A6T34DR31	136
113897.00	√	A6T34DR32	136
113901.00	√	C6C28DB24	147
113902.00	C/A	C6C28DB25	147
113903.00	√	C6C28DB26	147
113904.00	√	C6C28DB27	147
113905.00	√	C6C28DB28	147
113908.00	√	M6C14FB22	148
113909.00	√	M6C14FB23	148
113910.00	√	M6C14FB24	148
113911.00	√	M6C14FB25	148
113912.00	√	C6C28FC3	149
113913.00	√	C6C28FC4	149
113914.00	√	C6C28FC5	149
113915.00	√	C6C28FC6	149
113916.00	√	C6C28FB25	148
113917.00	√	C6C28FB26	148
113918.00	√	C6C28FB27	148
113919.00	√	C6C28FB28	148
113920.00	√	C6C28FB29	148
113921.00	√	M6C14FC5	149
113922.00	√	M6C14FC6	149
113923.00	√	M6C14FC7	149

Catalogue No.	Availability	Model No.	Page No.
113924.00	√	M6C14FC8	149
113925.00	√	P6K14FC4	149
113926.00	√	U6T34DR33	136
113928.00	√	C6C28FB24	148
113929.00	√	P6K14FB9	148
113931.00	√	C6C34FK52	29
113936.00	√	C6K28FB2	148
113937.00	√	C6K28DB5	147
113938.00	√	M6K17FB39	121
113939.00	√	C6P34NK5	128
113955.00	√	A6C34FC44	74
113956.00	√	A6C34FC45	74
113957.00	√	A6C34FK53	74
113958.00	√	A6C34FK54	74
113959.00	√	U6C34FK55	74
113972.00	√	C6T17FB75E	57
114142.00	√	C6T34FK46	54
114165.00	√	C6C17NK19	164
114167.00	√	C6C17FK50	164
114176.00	√	C6T34FC42	52
114201.00	√	C6T34DK7	75
114202.00	√	C6T34DK6	75
114203.00	√	C6T34DK5	75
114207.00	√	C6T34FC38	76
114208.00	√	C6T34FC37	76
114213.00	√	C6T17FC114	52
114214.00	√	M6K34DK8	156
114215.00	√	P6K34DK9	156
114216.00	√	C6C34DB71	158
114222.00	√	C6C28DR1	148
114223.00	C/A	C6C14DR18	148
114224.00	C/A	C6C28DR2	148
114225.00	√	C6C14DR19	148
114226.00	√	C6C28DR3	148
114227.00	√	C6C14DR16	148
114228.00	C/A	C6C28DR4	148
114229.00	C/A	C6C14DR17	148
114231.00	√	C6K14DR12	148
114233.00	√	C6K14DR13	148
114304.00	√	C6T14NB1	149
114306.00	C/A	C6T28FB4	149
114307.00	√	C6T14FB7	149
114309.00	√	C6T17NB53	56
114310.00	√	C6C34WC2	85
114311.00	√	C6C17WC2	85
114312.00	√	C6C34WC3	85
114313.00	√	C6C17WC3	85
114314.00	√	C6C34WC4	85
114315.00	√	C6C17WC4	85
114316.00	√	C6C34WC5	85
114317.00	√	C6C17WC5	85
114318.00	√	C6C34WC6	85
114319.00	√	C6C17WC6	85
114327.00	D	C6T17FB85C	58
114424.00	√	A6C34XC26	68

Canada Catalogue Number Index

LEESON® Motors, Sub-FHP Gearmotors, Drives and Accessories

Catalogue No.	Availability	Model No.	Page No.
114425.00	√	A6C34XC27	68
114467.00	D	C6T17FK53D	61
114468.00	√	C6T34FK51C	61
114469.00	√	C6T34FC45C	61
114472.00	√	C6T17FK54D	61
114614.00	D	C6T34FB35D	49
114617.00	√	C6C11FB7	23
114618.00	√	C6T8FB11	47
114620.00	√	A6P8NZ2	141
114624.00	√	C6T17FK58	54
114625.00	√	A6T34EK1	71
114626.00	√	A6T17EK7	71
114627.00	√	A6T34EK2	71
114628.00	√	A6T17EK8	71
114629.00	√	A6T34XK2	71
114630.00	√	A6T17XK11	71
114631.00	D	A6T34XK3C	71
114632.00	D	C6T17XK12	71
114633.00	D	A6T34XK4	71
114634.00	D	A6T17XK13	71
114635.00	D	A6T34XK5	71
114636.00	D	A6T34XK6	71
114637.00	√	C6C34WK9	85
114638.00	√	C6T17FC132	53
114889.00	√	C6T14FC5	150
114891.00	√	C6T14FC4	150
114892.00	√	C6T9FC1	150
114893.00	√	C6T28FC1	150
114894.00	√	C6T14FC6	150
114931.00	√	C6T34FC49	76
114932.00	√	P6C17FB113	159
114933.00	√	P6C17FB112	159
114995.00	√	P6K34FK15	29, 156
115024.00	√	M6K34FK16	28, 156
115048.00	√	P6K34FK17	29, 156
115597.00	D	C6T34FK78C	62
115743.00	√	C6T11VK1	86
115744.00	√	C6T11VK2	86
115826.00	D	C6T17DB78	34
115828.00	D	C6T17FB119C	49
115830.00	D	C6T17FB120B	48
115877.00	√	M6C34FK78	28, 156
115878.00	C/A	P6C34FK79	29
115879.00	√	M6C17FK80	28, 156
116128.00	D	C6T34DB30	33
116129.00	√	C6T34FB49C	48
116181.00	√	A6C34XC35	68, 74
116183.00	√	A6C34XC34	68, 74
116185.00	√	A6C34XC33	68, 74
116186.00	√	A6C34XC32	68, 74
116187.00	√	A6T34EC28	70, 76
116188.00	√	A6C34XC31	68, 74
116190.00	√	C6T17XK23	71
116191.00	√	C6T17XK24	71
116201.00	√	C6T8NC37	141
116202.00	√	C6T8NC38	141
116340.00	√	C6T11FK12	54
116343.00	√	NZ6C17VK1	110
116344.00	√	NZ6C34VK2	110
116345.00	√	NZ6C17VK2	110
116346.00	√	CZ6K17VK2B	110
116347.00	√	NZ6C34VK1	110
116348.00	√	CZK17VK1B	110
116349.00	√	NZ6C17VC1	110
116350.00	√	NZ6C17VC2	110
116351.00	√	CZ6K17VC2	110
116352.00	√	CZ6K17VC1	110
116399.00	√	C6T17FK91C	55
116400.00	√	C6T17FK92C	62
116482.00	C/A	CZ6K34WK1	110
116483.00	C/A	CZ6T17VK31	165
116485.00	√	M6C17FK81	122, 156
116486.00	√	M6C17FK80	122, 156
116487.00	√	M6C17FK79	122, 156
116488.00	√	M6C17FK78	122
116489.00	√	M6K17FK47	122
116523.00	√	P6K34DB22	153
116593.00	√	A6T17DR33	136
116595.00	√	C6T17DB90	34
116599.00	√	A6C17DR54	134
116600.00	√	A6K17DR41	134
116601.00	√	A6K17DR42	134
116605.00	√	A6C34XK7	68
116606.00	√	A6C17XK33	68
116607.00	√	A6C17XK31	68
116608.00	√	A6C34XK6	68
116609.00	√	A6C17XK32	68
116610.00	√	A6C17XK34	68
116611.00	√	A6C34XK5	68
116612.00	√	A6C17XK30	68
116613.00	√	A6C34XK4	68
116614.00	√	A6C17XK29	68
116615.00	√	A6C34XK3	68
116616.00	√	A6C34XK2	68
116641.00	C/A	C6T34VK15	86
116698.00	√	C6T34DC92	75
116699.00	√	C6T34DK18	75
116703.00	√	M6K17FK50	28, 156
116704.00	√	P6K17DB47	155
116705.00	√	P6K34FB31	25, 155
116706.00	√	M6C34DB75	155
116707.00	√	M6C34DK5	156
116708.00	√	P6K34DB26	17, 155
116709.00	√	P6K34DK18	20, 156
116739.00	√	C6T17FB152	47
116743.00	√	C6T17FC209	53
116744.00	√	C6T17FC210	53
116745.00	√	C6T17FK98	54
116746.00	√	C6T17FK96	54
116747.00	√	C6T17FK97	54
116748.00	√	C6T34FC97	53
116749.00	√	C6T11FC29	53
116750.00	√	C6T34FC98C	53
116751.00	√	C6T34FC94	53
116752.00	D	C6T17DB92	33
116754.00	D	C6T17DB91A	33
116757.00	√	C6T17FB151	48
116758.00	√	C6T34FB50B	48
116759.00	√	C6T17FB150	48
116760.00	√	C6T34FB51	49
116761.00	√	C6T17FB154	49
116774.00	√	C6T34WC14	77
116775.00	√	C6T34WC15	77
116779.00	√	C6T34WK12	77
116780.00	√	C6T34WK13	77
116789.00	√	P6K34DB27	153
116922.00	√	M6C17FK86	28
117026.00	√	C6T34FK113B	62
117048.00	D	C6T34FK114A	61
117118.00	√	CZ6T34TK1	115
117119.00	√	CZ6T17TK1	115
117120.00	√	CZ6T34TK2	115
117121.00	√	CZ6T17TK2	115
117122.00	√	CZ6T34TK3	115
117126.00	√	CZ6T34TC1	116
117127.00	√	CZ6T17TC1	116
117128.00	√	CZ6T34TC2	116
117129.00	√	CZ6T17TC2	116
117130.00	√	CZ6T34TC3	116
117266.00	√	CZ6T17VK46	108
117267.00	√	CZ6T17VK47	108
117269.00	√	CZ6T34VK19	108
117270.00	√	CZ6T17VC56	109
117271.00	√	CZ6T34VK20	108
117272.00	√	CZ6T17VC57	109
117273.00	√	CZ6T34VK21	108
117275.00	√	CZ6T11VK5	108
117276.00	√	CZ6T11VK6	108
117275.00	√	CZ6T34VC22	109
117280.00	C/A	CZ6T34VC23	109
117281.00	√	CZ6T34VC24	109
117282.00	D	CZ6T17WC28	109
117296.00	D	CZ6T17WK30	115
117525.00	√	CZ6T17VK51A	115
117526.00	D	C6T17VK50A	115
117527.00	√	C6T17NK44A	115
117574.00	√	A6T34XB22A	69
117689.00	√	M6K17FB56	121
117690.00	√	M6K17FB57	121
117691.00	√	M6K17FB60	121
117692.00	√	M6K17FB58	121
117693.00	√	M6K17FB59	121
117698.00	√	C6T17NC332	165
117699.00	√	C6T17NC333	165
117715.00	√	U6K34DC19A	73

Canada Catalogue Number Index

LEESON® Motors, Sub-FHP Gearmotors, Drives and Accessories

Catalogue No.	Availability	Model No.	Page No.
117762.00	√	CZ6T17VK52	108
117850.00	D	A6T17XK27	71
117851.00	D	C6T17XK28	71
117852.00	√	A6T17XC29	70
117853.00	√	C6T17XC30	70
117856.00	√	C6T17EB38	69
117857.00	√	C6T17EB39	69
117858.00	√	C6T17XB35	69
117859.00	√	C6T17EK11	71
117860.00	√	C6T17EC30	70
117862.00	√	M6C17FB164	123
117863.00	√	M6C17FB165	123
117864.00	√	M6C17FB166	123
117865.00	√	M6C17FB167	123
117866.00	√	M6K17FB61	123
117867.00	√	M6K17FB62	123
117872.00	√	C6T17DC89	75
117873.00	√	C6T17DC87	75
117874.00	√	C6T17DC88	75
117875.00	√	C6T17DK34	75
117876.00	√	C6T17DK35	75
117878.00	√	M6C17FC178	123
117879.00	√	M6C17FC179	123
117880.00	√	M6C17FC180	123
117881.00	√	M6C17FC181	123
117883.00	√	117883.00	129
117884.00	√	117884.00	129
117887.00	√	117887.00	129
117888.00	√	117888.00	129
117889.00	√	117889.00	129
117906.00	√	CZ6T17TK3	117
117907.00	√	CZ6T17TK4	117
117913.00	√	F56AA73F16T	78
117914.00	√	F56AA74F16T	78
117915.00	√	K56AB47F16T	78
117916.00	√	187855T	78
118007.00	√	CI6D17FT1	181, 195
118008.00	√	CI6D17FT2	181, 195
118009.00	√	CI6D34FT1	181, 195
118010.00	√	CI6D34FT2	181, 195
118014.00	√	CI6D17FK1	181, 195
118015.00	√	C6D17EK1	190
118016.00	√	C6D17EK2	190
118017.00	√	C6D17EK3	190
118018.00	√	C6D17EK4	190
118019.00	√	C6D17EK5	190
118054.00	√	C6D17EK6	190
118055.00	√	C6D17EK7	190
118056.00	√	C6D17EK8	190
119090.00	√	A6C34DC75	73
119091.00	√	A6C34DC76	73
119092.00	√	U6K34DC21	73
119227.00	√	C6C34NK28B	128
119231.00	√	CZ6C34VK4	128
119232.00	√	C6T34VK23	128

Catalogue No.	Availability	Model No.	Page No.
119266.00	√	CZ6T11TK1	115
119267.00	√	CZ6T11TK2	115
119395.00	√	C6T11FB28	48
119396.00	√	C6T34FB54	49
119414.00	√	C6T34FC123	53
119416.00	√	C6T34FK131	54
119417.00	√	C6T34FK132	54
119418.00	√	C6T34FK133	55
119419.00	√	C6T17FR3A	56, 136
119420.00	√	A6T17XC52	70
119421.00	√	A6T17XB32	69
119422.00	√	A6T34XC47A	70
119423.00	√	C6T17XC51	70
119424.00	√	A6T34XC49	70, 76
119425.00	√	A6T34XB23	69
119426.00	√	C6T17XB33	69
119427.00	√	A6T17XC49	70
119428.00	√	A6T34XC48	70
119429.00	√	A6T34XC50	70, 76
119430.00	√	C6T17XC50	70
119431.00	√	A6T34XC51	70
119433.00	√	C6T17XB34	69
119434.00	√	A6T34XC52	70, 76
119435.00	√	A6T34XC53	70
119436.00	√	A6T34XK25	71
119437.00	√	A6T17XK23	71
119438.00	√	C6T17XK34	71
119439.00	√	A6T34XK24	71
119440.00	√	A6T17XK35	71
119441.00	√	C6T17XK36	71
119442.00	√	A6T34XK26	71
119443.00	√	C6T34XK24	71
119448.00	√	C6C34WK29	128
119452.00	√	C6T34FK134	76
119453.00	√	C6T34FC124	76
119454.00	√	C6T34FK135	76
119455.00	√	C6T34FC125	76
119456.00	√	C6T34FC126	76
119457.00	√	C6T34FK136	76
119458.00	√	C6T34WK30	77
119459.00	√	C6T34WC24	77
119460.00	√	C6T34WC25	77
119461.00	√	C6T34WK31	77
119462.00	√	C6T34WC26	77
119463.00	√	C6T34WK32	77
119476.00	√	C6T17WK44	86
119478.00	√	C6T11WK11	86
119479.00	√	C6T17WK381	87
119480.00	√	C6T17WK45	86
119482.00	√	C6T34WK33	86
119483.00	√	C6T17WK46	86
119491.00	√	CZ6T17WK52	108
119492.00	√	CZ6T11WK12	108
119494.00	√	CZ6T17WK56	108
119495.00	√	CZ6T17WK54	108

Catalogue No.	Availability	Model No.	Page No.
119497.00	√	CZ6T17WC57	109
119498.00	√	CZ6T17WC52	109
119499.00	√	CZ6T17WC58	109
119511.00	√	CZ6T17UK1	115
119512.00	√	CZ6T17UC1	116
119513.00	√	CZ6T11UK1	115
119520.00	√	CZ6T17UC2	116
119522.00	√	CZ6T17UK2	115
119523.00	√	CZ6T17UK3	115
119524.00	√	CZ6T17UC3	116
119525.00	√	CZ6T34UC1	116
119526.00	√	CZ6T34UK1	115
119527.00	√	CZ6T17UK4	117
119528.00	√	CZ6T17UK5	117
119529.00	√	CZ6T17UK6	117
119530.00	√	CZ6T34UK2	117
119531.00	√	CZ6T34UC2	117
119539.00	√	C6T17FB184A	57
119540.00	√	C6T17FB185A	57
119542.00	√	C6T17FC251A	61
119543.00	√	C6T17FC252A	61
119544.00	√	C6T34FC133A	61
119563.00	√	C6T17FK105	164
119566.00	√	C6T17NC343	165
119589.00	√	C6T17FB183A	58
119601.00	√	C6T34FK152A	61
119604.00	√	C6T17FK110A	164
119605.00	√	C6T34FK143A	62
119611.00	√	C6T17FK108A	61
119723.00	√	A6T17XK29A	71
119736.00	√	A6T11XB49	69
119737.00	√	A6T11XB50	69
119784.00	√	A6T17XK37A	71
119785.00	√	CZ6T17VK61	165
119973.00	√	CZ6T17VK74	108
119974.00	√	CZ6T17VC73	109
119975.00	√	CZ6T17TK5	115
119976.00	√	CZ6T17TC3	116
120000.00	√	A143C17DB1	16
120001.00	√	U145K17DB1	16
120003.00	√	M143C17DB2	16, 153
120004.00	√	P145K17DB3	16, 153, 155
120008.00	√	M143C17FB2	24, 155
120009.00	√	M145K17FB2	24, 155
120017.00	√	C145K17FC3	27
120025.00	√	C143C17FB3	24
120026.00	√	C145K17FB3	24
120036.00	√	C145C34FB1	25
120042.00	√	C145K17DB5	16, 153
120043.00	√	C145K11FB1	24
120044.00	√	C143C17DB3	16, 153
120060.00	√	P145K17FC2	27
120067.00	√	C145K17DB9	16
120073.00	√	C145K17DC4	19
120097.00	√	C143T11FC1	52

Canada Catalogue Number Index

LEESON® Motors, Sub-FHP Gearmotors, Drives and Accessories

Catalogue No.	Availability	Model No.	Page No.
120101.00	√	C143C34FC1	27
120102.00	√	C145C34FC2	27
120106.00	√	C145C34DB3	16
120107.00	√	C143C34B1	16
120130.00	√	C143C34FB1	24
120274.00	√	C145K17FK2	29
120341.00	√	C145K34FB3	25, 157
120374.00	√	C143C34NB1	125, 140
120375.00	√	C145C34NB1	125, 140
120376.00	√	C145K34NB1	125, 140
120377.00	√	C143T34NB2	140
120378.00	√	C145T34NB1	140
120379.00	√	C145T34NB2	140
120395.00	√	P145C34FB5	25, 155, 157
120485.00	√	C143T11FK2	54
120554.00	√	P145K34DB1D	17, 153
120589.00	√	C143C17WB1	85
120590.00	√	C145C17WB1	85
120728.00	√	C145K34FB12	158
120824.00	√	P145K34FC6	27, 157
120855.00	√	M145K17FC13	122
120867.00	√	P145K17FB22	25, 155
120879.00	√	P145K17DB38	16, 155
120921.00	√	C143T17FB13	48
120922.00	√	C145T17FB33	48
120923.00	√	C145T17FB32	49
120925.00	√	C143C34FB5	158
120940.00	C/A	C145T48FB48	143
120941.00	√	C145T48FB60	143
120942.00	C/A	C143T48FB8	144
120943.00	C/A	C143T48FB9	144
120944.00	C/A	C143T48FB6	143
120945.00	C/A	C143T48FB7	143
120946.00	√	C145T48FB59	143
120947.00	C/A	C145T48FB61	143
120990.00	√	C145K28FC2	149
120992.00	√	C145K17DK7	20
120994.00	√	C145K17DK8	79
120995.00	√	C145K17DK9	79
120996.00	√	C143C17DK1	79
120997.00	√	C143C34FB6	158
120998.00	√	C145K34FB16	158
121001.00	√	C143C17FC2	27
121002.00	√	C143C17DC2	18
121003.00	√	C143T17DB10	33, 154
121004.00	√	C145T17DB32	33, 154
121005.00	√	C145T17DB33	34, 154
121008.00	√	C145C34FK2	29
121009.00	√	C143T11FB2	47
121060.00	√	P145K34FK4	29
121063.00	√	C145T17DC30	38
121064.00	√	C143T17DC12	38
121065.00	√	C145T17FC38	53
121066.00	√	C145T17FC37	53
121067.00	√	C143T17FC16	53

Catalogue No.	Availability	Model No.	Page No.
121070.00	√	C145K28FB6	148
121071.00	√	C145T17DC31	39
121073.00	D	C145T17WK4D	87
121179.00	√	C143T17FK9	54
121180.00	√	C145T17FK26	54
121181.00	√	C145T17FK27	54
121184.00	C/A	C145C34DC4	19
121190.00	√	C145C34DK3	79
121199.00	√	C145T8FB5	47
121312.00	√	C145T48FB62C	143
121465.00	√	P145K17FK10	29, 156
121507.00	√	C145K17FB24	25
121514.00	√	C143T34DB4	33
121515.00	√	C145T34DB15	34
121516.00	√	C145T34DB16	34
121517.00	√	C145T11DB7	33
121518.00	√	C143T34FB1	48
121519.00	√	C145T34FB33	49
121520.00	√	C145T11FB20	48
121569.00	√	M143C17FB13	121
121622.00	√	CZ145K17WK2	110
121623.00	C/A	CZ145K34WK1	110
121624.00	C/A	CZ145K17WC2	110
121625.00	√	M145K17FK11	122
121632.00	C/A	CZ145K17WK1	110
121633.00	C/A	CZ145K17WC1	111
121672.00	√	C143T34FK15	54
121673.00	√	C145T34FK39	54
121675.00	√	C145T17DK22	40
121676.00	√	C145T17DK21	40
121680.00	√	C143C17FK1	28
121681.00	√	C145K17FK13	28
121750.00	D	CZ143T34WC2	116
121751.00	D	CZ143T17WC5	116
121815.00	√	C145K17FK17	164
121816.00	√	C145K17FK16	164
121825.00	√	C145K34FK9	29
121867.00	√	C143T17WK11	86
121868.00	√	C145T17WK30	86
121870.00	√	C145T34WK28	86
121871.00	√	C145T17WK31	86
121873.00	√	CZ143T17WK12	108
121874.00	√	CZ143T34WK7	108
121875.00	√	CZ145T17WK32	108
121876.00	√	CZ145T34WK18	108
121877.00	√	CZ145T17WK33	108
121878.00	√	CZ145T34WK27	108
121879.00	√	CZ143T34UK1	115
121880.00	√	CZ143T17UK1	115
121881.00	√	CZ145T34UK1	115
121882.00	√	CZ145T17UK1	115
121908.00	√	CZ143T34UC1	116
121909.00	√	CZ143T17UC1	116
121910.00	√	CZ145T34UC1	116
121911.00	√	CZ145T17UC1	116

Catalogue No.	Availability	Model No.	Page No.
121914.00	√	A143T34XB25	69
121915.00	√	A145T17XB28	69
121916.00	√	A145T34XB25	69
121917.00	√	C145T17XB27	69
121918.00	√	C145T34XB26B	69
121919.00	√	C143T17XK3	71
121920.00	√	C145T17XK6	71
121921.00	√	C145T17XK7	71
121922.00	√	C145T17XK8	71
121929.00	√	C145T34FK43	55
121935.00	√	C143T17DK6	40
121936.00	√	C145T11FK7	54
121937.00	√	C143T17FB29A	57
121938.00	√	C145T11FB31A	57
121939.00	√	C145T34FB41A	57
121940.00	√	C145T17FB90A	57
121941.00	√	C145T34FB42A	58
121942.00	√	C145T17FB91A	58
121945.00	√	C143T17DB22A	41, 154
121946.00	√	C145T17DB75A	41, 154
121947.00	√	C145T34DB18A	41
121948.00	√	C145T17DB76A	41, 154
121949.00	√	C145T34DB19A	41
121950.00	√	C143T17WK17A	87
121951.00	√	C145T17WK42A	87
121952.00	√	C145T17WK43A	87
121953.00	√	A145T17XB29AA	69
121954.00	√	A145T17XB30AA	69
121955.00	D	CZ145T17WK44A	115
121961.00	√	A143T34XB26A	69
121962.00	C/A	————	69
121963.00	C/A	————	69
121968.00	√	C145T34FB49	49
121973.00	√	M143K17FB3	121
121974.00	√	M143K17FB4	121
121975.00	√	M145K17FB29	121
122024.00	√	C145T17XB31	69
122025.00	√	C145T17XB32	69
122118.00	D	CZ145T17WC42	117
122122.00	√	C145K34NB6	127
122162.00	√	C145T11DC6	38
122163.00	√	C145T34DC17	39
122164.00	√	C143T34DC9	39
122165.00	√	C145T11FC12	53
122166.00	√	C143T34FC22	53
122167.00	√	C145T34FC44	53
122171.00	√	C145T34FC45	53
122174.00	√	A145T17XC9	70
122175.00	√	C145T17XC10	70
122185.00	√	C145T34WK37	86
122202.00	C/A	CZ143T17WC15	109
122203.00	√	CZ145T17WC49	109
122204.00	√	CZ145T17WC48	109
122205.00	√	CZ145T34WC24	109
122206.00	√	CZ145T34WC25	109

Canada Catalogue Number Index

LEESON® Motors, Sub-FHP Gearmotors, Drives and Accessories

Catalogue No.	Availability	Model No.	Page No.
122207.00	√	CZ143T34WC8	109
122214.00	√	C143T34DC10	38
122219.00	√	CZ143T17UK2	115
122221.00	√	CZ143T17UK3	117
122222.00	√	CZ145T17UK2	117
122227.00	√	C143T17FC46A	61
122228.00	√	C145T17FC134A	61
122229.00	√	C145T17FC129A	61
122248.00	√	C143T17FK30	164
122249.00	√	C145T17FK76	164
122250.00	√	C145T17FK75	164
122254.00	√	C145T17NC33	165
122255.00	√	C145T17NC31	165
122269.00	√	C145T17FK78A	164
122275.00	√	C145T17FK77A	164
122413.00	√	CZ143T17WK24A	115
122414.00	√	CZ145T17WK55A	115
122460.00	√	CI45T34WK42A	115
128000.00	√	C145D17FK2	188
128001.00	√	C182D17FK3	188
128010.00	√	C145D17FK3	188
128023.00	C/A	C145D11FK1	188
131463.00	√	C182T17FB32	49, 154
131464.00	√	C184T17FB42	49, 154
131468.00	√	C184T48FB61	143
131469.00	√	C184T48FB62	143
131470.00	√	C184T48FB63	144
131471.00	√	C184T48FB64	144
131472.00	√	C184T48FB65	144
131473.00	C/A	C184T48FB66	144
131474.00	C/A	C184T48FB67	143
131475.00	√	C184T48FB68	143
131501.00	√	C184T17FC29	53
131502.00	√	C184T17FK15	55
131503.00	√	C182T17FC26	53
131504.00	√	C182T17FK14	55
131509.00	√	C182C17FB11	25
131515.00	√	C182C17DB8	16, 153
131516.00	C/A	C182C17FC3	27
131517.00	√	C184T17DC16	39
131518.00	C/A	C182T17DC20	39
131519.00	√	C182T17DB37	34, 154
131520.00	√	C184T17DB44	34, 154
131526.00	√	C184C11FB2	24
131530.00	√	U184C17DB20	17
131533.00	√	C184C17FB12	25
131534.00	√	C184C17DB19	17, 153
131535.00	√	U182C17DB9	16
131536.00	√	P182C17DB10	16, 153
131537.00	√	C184K17DB31	17, 153
131538.00	√	C184K17FB15	25
131539.00	C/A	C184K17DC6	19
131540.00	√	C184K17FC6	27
131541.00	√	P182C17FB12	121, 122
131542.00	√	P184C17FB13	121, 122
131543.00	√	P184K17FB16	121
131544.00	√	C184C17DC5	19
131545.00	√	C184C17FC4	27
131549.00	√	C184K34FB6	25
131553.00	C/A	C182C14DB3	147
131554.00	√	C184C14DB2	147
131555.00	√	C184K14DB9	147
131556.00	√	C182C14FB6	148
131557.00	√	C184C14FB6	148
131560.00	√	C184K17DB32	17
131561.00	√	P184C17DB21	17
131571.00	C/A	C182C17WB3	85
131578.00	√	C184K14FB5	148
131599.00	C/A	P182C14FC2	149
131600.00	C/A	P182C14FB5	148
131601.00	√	P184C14FB7	148
131602.00	√	P184K17FC7	122
131603.00	√	P184C17FC5	122
131604.00	√	C182C17DK2	79
131605.00	√	C184K17DK14	79
131616.00	√	C184K34DB3	17
131622.00	√	P184K17DB33	17, 153, 155
131629.00	√	P184C17DK3	20
131630.00	√	M184K17DK13	20, 156
131631.00	√	P184C17FK9	29
131632.00	√	P184K34FK2	29, 156
131633.00	√	P184K17FK11	29, 156
131636.00	√	C182K34DB3	17
131637.00	√	C182K34FB2	25
131638.00	√	C184K28FB2	148
131640.00	√	C182K34DK1	79
131641.00	√	C184K34DK3	79
131667.00	√	C184T48FB70C	143
131668.00	√	C184T48FB69C	143
131777.00	C/A	C184K34DC2	19
131778.00	√	C184K34FC2	27
131781.00	√	C184K34DK4	20
131847.00	√	C182C34DB2	125
131848.00	√	C182K34DB4	125
131849.00	√	C184T34DB8	126
131850.00	√	C184T34DB9	126
131851.00	√	C184K17DB40	17, 155
131853.00	√	C184K17DK18	20, 156
131855.00	√	P184K17FB26	25, 155
131856.00	√	P184K17FB25	25, 155
131857.00	√	P184K17FK14	29, 156
131971.00	√	C182T11DB9	33
131972.00	√	C184T11DB9	34
131980.00	√	C182T11FB9	48
131981.00	√	C184T11FB20	49
131985.00	√	C182T34FB72	49
131986.00	√	C184T34DB11	34
131987.00	√	C184T34FB20	49
131988.00	√	C184T34DB12	34
131994.00	√	P184C17FK10	122
131995.00	√	P184K17FK13	122
132042.00	√	P184K34FB9	25, 155
132043.00	√	C184K34DK8	20
132044.00	√	C184K34DB8	17, 153
132073.00	√	C182C17DK3	79
132079.00	√	C182T34FK10	55
132080.00	√	C184T34FK32	55
132083.00	C/A	C182K34DK2	20
132093.00	√	C182T34FB73A	58
132094.00	√	C184T34FB22A	58
132198.00	√	C182T17WK13	86
132199.00	√	C182T34WK1	86
132200.00	√	C184T34WK10	86
132201.00	√	C184T17WK15	86
132203.00	√	CZ182T34WK2	108
132205.00	√	C184T34WK21	86
132206.00	√	C184T17WK14	108
132207.00	√	C184T34WK11	108
132208.00	√	C184T17WK16	108
132243.00	√	C184T11FK6	54
132251.00	√	C182T11FB13A	57
132252.00	√	C184T11FB26A	58
132253.00	√	C182T17FB52A	58
132255.00	√	C184T17FB64A	58
132261.00	√	C182T17DB58A	41, 154
132262.00	√	C184T17DB80A	41, 154
132264.00	√	C184T17WK19A	87
132265.00	√	C182T17WK17A	87
132266.00	√	C182T17WK18A	108
132267.00	√	C184T34WK15A	108
132268.00	√	C184T17WK20A	108
132293.00	C/A	182TPFSA20017	64
132294.00	C/A	184TPFSA20018	64
132313.00	√	C184T34FK48	55
132391.00	√	C182K34NB106	127
132392.00	√	C182K34NB107	127
132393.00	√	C184T34NB3	127
132394.00	√	C184T34NB4	127
132425.00	√	C184T34DC110	39
132426.00	√	C182T34DC111	39
132427.00	C/A	C182T11DC112	39
132428.00	√	C182T8FB14	48
132429.00	√	C184T8FB7	48
132430.00	√	C184T11FC112	53
132431.00	√	C182T11FC113	53
132433.00	√	C182T34FC7	53
132434.00	√	C184T34FC28	53
132435.00	√	C182T11FK2	54
132447.00	√	C182T17WC12	109
132448.00	√	C184T17WC106	109
132449.00	√	C184T34WC11	109
132457.00	√	C182K34FC2	80
132458.00	√	C184K34FK6	80
132461.00	√	C182T17FC43A	62
132462.00	√	C184T17FC52A	62

Canada Catalogue Number Index

LEESON® Motors, Sub-FHP Gearmotors, Drives and Accessories

Catalogue No.	Availability	Model No.	Page No.
132561.00	√	C184T34FC32	53
132563.00	√	C182T11WK1	86
132565.00	√	CZ182T11WK2	108
132595.00	√	C182T17FC47	53
132596.00	√	C182T11FC7	53
140120.00	√	N215K17FB1	25
140130.00	D	P215K17FB2	122
140155.00	√	C215K17DB2	17, 153
140203.00	√	P215K17FB3	122
140209.00	D	P215K17FB4	122
140223.00	D	P215K17FB5	122
140311.00	D	C215K17DB4	17, 153
140414.00	√	P215K17FB6	122
140443.00	C/A	C215T48FB45	143
140444.00	C/A	C215T48FB47	143
140445.00	C/A	C215T48FB43	144
140446.00	C/A	C215T48FB44	144
140447.00	√	C215T48FB46	143
140448.00	√	C215T48FB48	143
140450.00	√	C213T17FB6	49, 154
140451.00	√	C215T17FB18	50, 154
140470.00	√	C213T17DB2	34, 154
140472.00	√	C215T17DB15	35, 154
140475.00	C/A	P213K14FB1	148
140483.00	√	C213T17DC7	39
140484.00	√	C215T17FC4	53
140485.00	C/A	C213T17DC5	39
140486.00	√	C213T17FC7	53
140521.00	√	C213T17FK7	55
140581.00	√	C215K17FB12	25
140640.00	√	C215K34DB2	125
140641.00	√	C215T34DB3	126
140642.00	√	C213K34DK2	79
140644.00	√	C215K34DK2	79
140665.00	√	C215K17DK1	79
140666.00	C/A	C215K17DK2	79
140678.00	√	C215K17FK4	29
140680.00	√	C213K34DB1	17, 153
140681.00	√	C215K34DB1	17, 153
140684.00	√	C213K34FB1	25
140685.00	√	C215K34FB1	25
140694.00	√	C213K34FK1	29
140695.00	√	C215K34FK1	29
140706.00	√	P215K17FB16	121
140707.00	√	P215K17FB15	121
140747.00	C/A	C215K11FB3	25
140753.00	√	C213T34DB4	35
140754.00	√	C215T34DB4	35
140755.00	√	C215T34FB11	50
140756.00	√	C213T34FB1	49
140770.00	√	C215T34FK11	55
140806.00	√	C215K17DK5A	20
140807.00	√	C215K17FK6	29
140816.00	√	C215K17DB13	127
140821.00	√	C215T17WK9	86

Catalogue No.	Availability	Model No.	Page No.
140822.00	√	C213T17WK9	86
140823.00	√	C215T34WK9	86
140825.00	√	C213T34WK4	108
140826.00	√	C213T17WK10	108
140827.00	√	C215T34WK11	108
140828.00	√	C215T17WK10	108
140830.00	√	215TBDW17041	127
140834.00	√	C215T11FK9	55
140840.00	C/A	213TPFSA20027	64
140841.00	C/A	215TPFSA20028	64
141084.00	√	C215K34DB3	125
141120.00	√	C213T34WK6	86
141125.00	√	C213T34WK7A	108
141126.00	√	C213T17WK15A	108
141127.00	√	C215T34WK13A	108
141128.00	√	————	108
141220.00	√	C215K34NB73	127
141228.00	√	C215T34DC69	39
141231.00	√	C213T11FC4A	53
141232.00	√	C215T11FC77	53
141233.00	√	215T34FC7	53
141234.00	√	C213T34FC1	53
141235.00	√	C215T34FC8	53
141281.00	√	C213F34FK2	80
141282.00	√	C215K34FK3	80
141311.00	√	C215K17FB73	126
141348.00	D	C215K17FZ76A	126
141427.00	√	P215K17FB79A	122
141430.00	√	C215K17DB18H159	17, 153
141432.00	√	P215K17FB81A	122
141433.00	√	P215K17FB82A	122
141434.00	√	P215K17FB78A	122
141437.00	√	C215K17FZ15A	126
163015.00	√	————	280
163016.00	√	————	280
163017.00	√	————	280
163018.00	√	————	280
163019.00	√	————	280
163020.00	√	————	280
163021.00	√	————	280
163024.01	√	————	281
163025.01	√	————	281
163027.01	√	————	281
163028.01	√	————	281
163029.01	√	————	281
163031.01	√	————	280
163032.01	√	————	281
163033.01	√	————	280
163034.01	√	————	281
163040.01	√	————	280
163041.01	√	————	281
163044.01	√	————	281
163045.01	√	————	281
163046.00	√	————	280
163077.00	√	————	281

Catalogue No.	Availability	Model No.	Page No.
163093.00	√	————	280
163094.00	√	————	280
163097.01	√	————	280
163102.00	√	————	281
163104.00	√	————	281
163115.00	√	————	281
163116.00	√	————	280
163124.00	√	————	280
163125.00	√	————	281
163126.00	√	————	281
163127.00	√	————	280
170000.00	√	C286T11DB1	35
170001.00	√	C286T11FB6	50
170002.00	√	C324T11DB5	35
170003.00	√	C324T11FB3	50
170004.00	√	C326T11DB1	35
170005.00	√	C326T11FB3	50
170006.00	√	C256T17DB5	35, 154
170007.00	√	C256T17FB4	50, 154
170009.00	√	C284T17DB7	35
170011.00	√	C284T17FB5	50
170013.00	√	C286T17DB8	35
170015.00	√	C286T17FB5	50
170017.00	√	C324T17DB8	36
170019.00	√	C324T17FB5	51
170021.00	√	C326T17DB5	36
170023.00	√	C326T17FB7	51
170025.00	√	C364T17DB7	36
170027.00	√	C364T17FB6	51
170029.00	√	C365T17DB5	36
170031.00	√	C365T17FB4	51
170032.00	√	C254T34DB5	35
170033.00	√	C256T34FB10	50
170034.00	√	C256T34DB5	35
170035.00	√	C284T34FB5	50
170036.00	√	C284T34DB4	35
170037.00	√	C286T34FB4	50
170038.00	√	C286T34DB3	36
170039.00	√	C324T34FB3	51
170040.00	√	C324T34DB3	36
170041.00	√	C326T34FB4	51
170042.00	√	C326T34DB5	36
170043.00	√	C364T34FB3	51
170044.00	√	C364T34DB3	36
170045.00	√	C365T34FB3	51
170046.00	√	C256T17DB6	42, 154
170048.00	√	C284T17DB8	42
170050.00	√	C286T17DB9	42
170052.00	√	C324T17DB9	43
170054.00	√	C326T17DB6	43
170062.00	√	C254T34FB4	50
170064.00	√	C215T34DB3	35
170065.00	√	C254T17DB9	35
170066.00	√	C254T17FB10	50, 154
170067.00	√	C284T11DB7	35

Canada Catalogue Number Index

LEESON® Motors, Sub-FHP Gearmotors, Drives and Accessories

Catalogue No.	Availability	Model No.	Page No.
170068.00	√	C284T11FB4	50
170087.00	√	C405T17FB4	51
170096.00	√	C364T11FB4	51
170097.00	√	C365T11FB5	51
170098.00	√	C404T11FB3	51
170099.00	√	C405T11FB5	51
170116.00	√	C254T17GB11C	58
170117.00	√	C256T17FB5D	58
170118.00	√	C284T17FB6C	59
170119.00	√	C286T17FB6C	59
170120.00	√	C324T17FB6D	59
170121.00	√	C326T17FB8D	59
170122.00	√	C254T11FB3	49
170123.00	√	C256T11FB4	50
170138.00	√	C254T11FB9	55
170140.00	√	C215T17FB43	50
170142.00	√	C213T17DB44	34
170143.00	√	C213T34DB45	35
170144.00	√	C215T17DB49	35
170145.00	√	C254T11DB43	34
170146.00	C/A	C256T11DB45	35
170147.00	√	C364T11DB1	36
170148.00	√	C365T11DB1	36
170149.00	√	C404T11DB5	36
170150.00	√	C405T11DB6	36
170151.00	√	C365T34DB4	36
170152.00	√	C404T17DB5	36
170154.00	√	C404T34DB1	37
170155.00	√	C405T17DB6	37
170157.00	√	C213T17FB43	49
170158.00	√	C213T34FB42	49
170159.00	√	C215T34FB47	50
170160.00	√	C405345FB5DAA	51
170165.00	√	C213T17FK2A	55
170166.60	√	C213T34FK5	55
170167.00	√	C215T17FK20A	55
170196.00	√	C213T34FB43E	58
170197.00	√	C215T34FB48D	58
170198.00	√	C254T34FB5D	58
170199.00	√	C256T34FB11D	58
170200.00	√	C364T17DB7	43
170201.00	√	C365T17DB6	43
170202.00	√	C404T17DB6	43
170203.00	√	C405T17DB7	43
170205.00	√	C445T17DB15	43
170207.00	√	C213T17FB44D	58
170209.00	√	C213T17DB45	42, 154
170211.00	√	C215T17DB50	42, 154
170212.00	√	C215T17FB44C	58
170215.00	√	C254T11FB4D	58
170216.00	√	C254T17DB10	42, 154
170219.00	√	C256T11FB5D	58
170222.00	√	C284T11FB5D	58
170224.00	√	C284T34FB6D	59
170226.00	√	C286T11FB7D	58

Catalogue No.	Availability	Model No.	Page No.
170228.00	√	C286T34FB5D	59
170230.00	√	C324T11FB4E	59
170232.00	√	C324T34FB4E	59
170234.00	√	C326T11FB4E	59
170236.00	√	C326T34FB5D	59
170238.00	√	C364T00FB5E	59
170239.00	√	C364T17FB7F	59
170241.00	√	C364T34FB5F	59
170243.00	√	C365T11FB6E	59
170244.00	√	C365T17FB5E	60
170246.00	√	C365T34FB5F	60
170248.00	√	C404T11FB4E	59
170251.00	√	C405T11FB6E	60
170253.00	√	C405T17FB5E	60
170254.00	√	C405T34FB6D	60
170256.00	√	C444T11FB6AA	51
170257.00	√	C444T17FB11A	60
170259.00	√	C445T11DB4	37
170260.00	√	C445T11FB5	51
170267.00	√	C445T34FB4A	60
170269.00	√	C444T11DB4	36
170352.00	√	C447T17FB8	51
170369.00	√	C444T17FB5	51
170371.00	√	C445T17FB8	51
170545.00	√	C445T17FB11A	60
170552.00	√	C213T34DB47	42
170553.00	√	C215T34DB5	42
170554.00	√	C254T34DB5	42
170555.00	√	C256T34DB9	42
170556.00	√	C284T34DB8	42
170557.00	√	C286T34DB5	43
170558.00	√	C324T34DB5	43
170559.00	√	C326T34DB7	43
170560.00	√	C364T34DB4	43
170561.00	√	C365T34DB6	43
170562.00	√	C404T34DB4	43
170563.00	√	C405T34DB3	43
170564.00	√	C444T34DB1	43
170565.00	√	C213T11DB7	41
170566.00	√	C215T11DB7	41
170567.00	√	C254T11DB45	42
170568.00	√	C256T11DB	42
170569.00	√	C284T11DB8	42
170570.00	√	C286T11DB6	42
170571.00	√	C324T11DB6	42
170572.00	√	C326T11DB6	42
170573.00	√	C364T11DB7	43
170574.00	√	C365T11DB5	43
170575.00	√	C404T11DB6	43
170576.00	√	C405T11DB7	43
170577.00	√	C444T11DB5	43
170578.00	√	C445T11DB6	43
170579.00	√	C445T11DB7	43
170580.00	√	C447T11DB1	43
170603.00	√	C447T17FB5A	60

Catalogue No.	Availability	Model No.	Page No.
170604.00	√	C184T34DB14A	34
170605.00	√	C182T17DB55A	34
170606.00	√	C182T34DB6	34
170607.00	√	C447T34FB4A	60
170608.00	√	C184T17DB75A	41
170609.00	√	C444T17DB6	43
170610.00	√	C182T34DB7	41
170611.00	√	C182T17DB56A	41
170612.00	√	C184T34DB15	42
170613.00	√	C184T17DB765A	34
170615.00	√	C215T34FB13	50
170621.00	√	444T34FB9A	60
170622.00	√	C182T34FB8A	49
170623.00	√	C184T34FB23A	49
170624.00	√	C449T17FB7A	51
170625.00	√	C449T17FB8A	60
171315.00	√	C447T11FB1	51
171316.00	√	C449T11FB1	51
171320.00	√	C182T17FB42	49
171321.00	√	C182T17FB43D	58
171322.00	√	C184T17FB43	49
171323.00	√	C184T17FB44D	58
171327.00	√	C184T17FK45B	62
171378.00	√	C213T11FB1	49
171379.00	√	C215T11FB1	49
171380.00	√	C213T11FB4A	58
171381.00	√	C215T11FB4A	58
171449.00	√	C405T34DB2	37
171518.00	√	C447T17DB10	37
171522.00	√	C444T17DB2	37
171523.00	√	C445T17DB14	37
171524.00	√	C445T17DB19	37
171525.00	√	C445T17DB20	37
171529.00	√	C449T17FB12	51
171530.00	√	C449T17FB13	51
171531.00	C/A	449T17FB15	60
171532.00	C/A	449T17FB14	60
171564.00	C/A	C182T34FK14	55
171565.00	√	C182T17FK27	55
171566.00	√	C184T17FK35	55
171573.00	√	C444T35DB1	37
171574.00	√	C213T11DB2	34
171575.00	√	C215T11DB6	34
171576.00	√	C445T11DB5	37
171577.00	√	C447T11DB1	37
171578.00	√	C445T34FB3	51
171579.00	√	C447T34FB3	51
171580.00	√	C444T34FB8	51
171587.00	√	C254T17FK8A	55
171589.00	√	C256T17FK8A	55
171591.00	√	C284T17FK5A	55
171592.00	√	C286T17FK4A	55
171593.00	√	C324T17FK5A	55
171594.00	√	C326T17FK5A	55
171595.00	√	C364T17FK5A	55

Canada Catalogue Number Index

LEESON® Motors, Sub-FHP Gearmotors, Drives and Accessories

Catalogue No.	Availability	Model No.	Page No.
171596.00	√	C365T17FK6	55
171597.00	√	C405T17FK2	55
171624.00	√	C182T34FB7A	58
171625.00	√	C184T34FB21A	58
171627.00	√	C184T11FB21A	58
171628.00	√	C447T11FB4A	60
171640.00	√	C145T17FB25AA	48
171642.00	√	C143T34FB5	48
171643.00	√	C145T11FB25	48
171644.00	√	C182T11FB15A	48
171645.00	√	C184T11FB29A	49
171646.00	√	C145T17FB78	48
171647.00	√	C145T17FB79	49
171648.00	√	C145T34FB37	49
171649.00	√	C143T17FB27A	57
171650.00	√	C145T11FB29A	57
171651.00	√	C143T34FB7A	57
171652.00	√	C145T17FB84A	57
171653.00	√	C145T34FB40A	58
171654.00	√	C145T17FB85A	58
171665.00	√	C449T11FB4A	60
171668.00	√	C444T11FB7A	60
171669.00	√	C445T11FB6A	60
171753.00	√	C143T17FK25A	54
171754.00	√	C145T17FK67A	54
171755.00	√	C145T17FK67A	61
171756.00	√	C145T17FK68A	61
171757.00	√	C182T17FK29A	62
171759.00	√	C213T17FK25A	62
171760.00	√	C215T17FK21A	62
171761.00	√	C254T17FK13A	62
171762.00	√	C256T17FK13A	62
171763.00	√	C284T17FK10A	62
171764.00	√	C286T17FK9A	62
171765.00	√	C324T17FK10A	62
171766.00	√	C326T17FK8A	62
171767.00	√	C184T34FB25A	49
171768.00	√	C184T34FB26A	58
174102.00	√	————	244
174107.00	√	————	244
174140.00	√	————	266, 270
174141.00	√	————	266
174142.00	√	————	266
174143.00	√	————	266
174144.00	√	————	266, 270
174145.00	√	————	266, 270
174146.00	√	————	266
174147.00	√	————	266
174148.00	√	————	266
174149.00	√	————	266, 270
174150.00	√	————	271
174151.00	√	————	270
174152.00	√	————	270
174153.00	√	————	270
174154.00	√	————	270

Catalogue No.	Availability	Model No.	Page No.
174155.00	√	————	270
174156.00	√	————	270
174157.00	√	————	270
174158.00	√	————	270
174159.00	√	————	270
174160.00	√	————	270
174161.00	√	————	270
174162.00	√	————	270
174163.00	√	————	270
174164.00	√	————	270
174165.00	√	————	270
174166.00	√	————	270
174167.00	√	————	270
174174.00	√	————	266
174175.00	√	————	266
174176.00	√	————	266
174177.00	√	————	266
174178.00	√	————	266
174179.00	√	————	266
174180.00	√	————	266
174181.00	√	————	266
174182.00	√	————	266
174183.00	√	————	266
174184.00	√	————	266
174185.00	√	————	266
174186.00	√	————	271
174187.00	√	————	271
174188.00	√	————	271
174190.00	√	————	269
174191.00	√	————	271
174192.00	√	————	266
174193.00	√	————	266
174194.00	√	————	271
174263.00	D	————	265
174264.00	D	————	265
174265.00	D	————	265
174266.00	D	————	265
174267.00	D	————	265
174268.00	D	————	265
174270.00	D	————	265
174271.00	D	————	265
174272.00	D	————	265
174273.00	D	————	265
174274.00	D	————	265
174276.00	D	————	265
174277.00	D	————	265
174278.00	D	————	265
174275.00	D	————	265
174280.00	D	————	265
174281.00	D	————	265
174282.00	D	————	265
174283.00	D	————	265
174284.00	D	————	265
174285.00	D	————	265
174286.00	D	————	265

Catalogue No.	Availability	Model No.	Page No.
174287.00	D	————	265
174288.00	D	————	265
174290.00	D	————	265
174291.00	D	————	265
174292.00	D	————	265
174293.00	D	————	265
174298.00	√	————	247
174299.00	√	————	247
174356.00	√	————	254, 256
174357.00	√	————	254, 256
174358.00	√	————	254, 256
174359.00	√	————	254, 256
174362.00	√	————	256
174363.00	√	————	256
174364.00	√	————	256
174365.00	√	————	256
174366.00	√	————	256
174367.00	√	————	256
174368.00	√	————	256
174369.00	√	————	256
174370.00	√	————	256
174400.00	√	————	270
174401.00	√	————	270
174402.00	√	————	270
174403.00	√	————	270
174404.00	√	————	270
174405.00	√	————	270
174406.00	√	————	270
174407.00	√	————	270
174408.00	√	————	270
174409.00	√	————	270
174410.00	√	————	270
174411.00	√	————	270
174412.00	√	————	270
174413.00	√	————	270
174414.00	√	————	270
174415.00	√	————	270
174416.00	√	————	270
174417.00	√	————	270
174418.00	√	————	270
174419.00	√	————	270
174429.00	D	————	263
174430.00	D	————	263
174431.00	D	————	263
174432.00	D	————	263
174433.00	D	————	263
174434.00	D	————	263
174435.00	D	————	263
174436.00	D	————	263
174438.00	D	————	263
174439.00	D	————	263
174440.00	D	————	263
174441.00	D	————	263
174442.00	D	————	263
174443.00	D	————	263

Canada Catalogue Number Index

LEESON® Motors, Sub-FHP Gearmotors, Drives and Accessories

Catalogue No.	Availability	Model No.	Page No.
174444.00	D	————	263
174445.00	D	————	262
174446.00	D	————	263
174447.00	D	————	263
174448.00	D	————	263
174452.00	D	————	263
174453.00	D	————	263
174454.00	D	————	263
174455.00	D	————	263
174456.00	D	————	263
174457.00	D	————	263
174458.00	D	————	263
174459.00	D	————	263
174460.00	D	————	263
174461.00	D	————	263
174462.00	D	————	263
174463.00	D	————	263
174464.00	D	————	263
174475.00	√	————	252
174482.00	√	————	250
174491.00	D	————	263
174492.00	D	————	262
174493.00	D	————	263
174494.00	D	————	263
174495.00	D	————	263
174497.00	D	————	263
174500.00	D	————	263
174510.00	√	————	250
174511.00	√	————	250
174512.00	√	————	250
174513.00	√	————	250
174515.00	√	————	252
174517.00	√	————	252
174519.00	√	————	252
174520.00	√	————	252
174521.00	√	————	252
174525.00	√	————	252
174526.00	√	————	252
174527.00	√	————	251
174528.00	√	————	251
174529.00	√	————	251
174530.00	√	————	251
174531.00	√	————	251
174532.00	√	————	251
174533.00	√	————	251
174534.00	√	————	251
174535.00	√	————	251
174536.00	√	————	251
174537.00	√	————	251
174538.00	√	————	251
174539.00	√	————	251
174549.00	√	————	250
174551.00	√	————	249
174552.00	√	————	249
174553.00	√	————	249

Catalogue No.	Availability	Model No.	Page No.
174554.00	√	————	250
174556.00	√	————	250
174557.00	√	————	249
174558.00	√	————	249
174559.00	√	————	249
174560.00	√	————	249
174561.00	√	————	249
174562.00	√	————	249
174563.00	√	————	249
174564.00	√	————	249
174565.00	√	————	249
174566.00	√	————	249
174567.00	√	————	249
174569.00	√	————	249
174571.00	√	————	249
174572.00	√	————	249
174573.00	√	————	249
174574.00	√	————	250
174575.00	√	————	250
174580.00	√	————	249
174581.00	√	————	250
174582.00	√	————	249
174583.00	√	————	250
174584.00	√	————	249
174585.00	√	————	250
174586.00	√	————	249
174593.00	√	————	249
174594.00	√	————	249
174595.00	√	————	250
174596.00	√	————	250
174597.00	√	————	250
174599.00	√	————	249
174603.00	√	————	258
174604.00	√	————	258
174605.00	√	————	258
174606.00	√	————	258
174607.00	√	————	258
174608.00	√	————	258
174609.00	√	————	258
174610.00	√	————	258
174611.00	√	————	258
174612.00	√	————	259
174613.00	√	————	259
174614.00	√	————	259
174615.00	√	————	259
174616.00	√	————	259
174617.00	√	————	259
174618.00	√	————	259
174619.00	√	————	259
174620.00	√	————	259
174621.00	√	————	259
174622.00	√	————	259
174623.00	√	————	259
174624.00	√	————	259
174625.00	√	————	259

Catalogue No.	Availability	Model No.	Page No.
174626.00	√	————	259
174627.00	√	————	259
174628.00	√	————	259
174629.00	√	————	259
174630.00	√	————	259
174631.00	√	————	259
174632.00	√	————	259
174633.00	√	————	259
174634.00	√	————	259
174635.00	√	————	259
174636.00	√	————	259
174637.00	√	————	259
174638.00	√	————	259
174639.00	√	————	259
174650.00	√	————	247
174651.00	√	————	258
174652.00	√	————	261
174653.00	√	————	261
174654.00	√	————	261
174655.00	√	————	261
174656.00	√	————	261
174657.00	√	————	261
174658.00	√	————	261
174659.00	√	————	261
174660.00	√	————	261
174661.00	√	————	261
174662.00	√	————	261
174663.00	√	————	261
174664.00	√	————	261
174665.00	√	————	261
174666.00	√	————	261
174667.00	√	————	261
174668.00	√	————	261
174671.00	√	————	261
174672.00	√	————	261
174673.00	√	————	261
174674.00	√	————	261
174675.00	√	————	261
174676.00	√	————	261
174677.00	√	————	261
174678.00	√	————	261
174693.00	√	————	271
174694.00	√	————	246
174695.00	√	————	246
174696.00	√	————	246
174697.00	√	————	271
174698.00	√	————	271
174699.00	√	————	261
174700.00	√	————	261
174701.00	√	————	261
174702.00	√	————	261
174703.00	√	————	261
174704.00	√	————	261
174709.00	√	————	244
174710.00	√	————	259

Canada Catalogue Number Index

LEESON® Motors, Sub-FHP Gearmotors, Drives and Accessories

Catalogue No.	Availability	Model No.	Page No.
174711.00	√	————	259
174712.00	√	————	259
174713.00	√	————	259
174729.00	√	————	252
174730.00	√	————	250
174732.00	√	————	251
174734.00	√	————	250
174735.00	√	————	251
174737.00	√	————	250
174738.00	√	————	251
174740.00	√	————	250
174741.00	√	————	251
174743.00	√	————	250
174747.00	√	————	251
174749.00	√	————	250
174750.00	√	————	251
174752.00	√	————	250
174753.00	√	————	251
174755.00	√	————	250
174757.00	√	————	250
174759.00	√	————	251
174761.00	√	————	251
174763.00	√	————	250
174764.00	√	————	251
174766.00	√	————	250
174767.00	√	————	251
174769.00	√	————	250
174914.00	√	————	249
174915.00	√	————	249
174916.00	√	————	249
174917.00	√	————	249
174918.00	√	————	249
174919.00	√	————	249
174920.00	√	————	249
174921.00	√	————	249
174922.00	√	————	249
174923.00	√	————	249
174925.00	√	————	249
174926.00	√	————	249
174927.00	√	————	249
174928.00	√	————	249
174929.00	√	————	249
174930.00	√	————	248
174931.00	√	————	248
174932.00	√	————	248
174933.00	√	————	248
174934.00	√	————	248
174935.00	√	————	250
174936.00	√	————	250
174937.00	√	————	250
174938.00	√	————	250
174939.00	√	————	250
174940.00	√	————	250
174941.00	√	————	250
174942.00	√	————	250

Catalogue No.	Availability	Model No.	Page No.
174943.00	√	————	250
174944.00	√	————	250
174945.00	√	————	250
174946.00	√	————	250
174991.00	√	————	259
174992.00	√	————	259
174993.00	√	————	259
174994.00	√	————	259
174996.00	√	————	252
174997.00	√	————	248
174998.00	√	————	252
174999.00	√	————	252
175000.00	-	————	279
175003.00	√	————	74, 282
175004.00	√	————	74, 282
175026.00	√	————	285
175050.00	√	————	282
175051.00	√	————	282
175052.00	√	————	282
175053.00	√	————	282
164136.00	√	————	282
175055.00	√	————	282
175056.00	√	————	282
175066.01	√	————	280
175068.01	√	————	280
175075.00	√	————	279
175076.00	√	————	279
175077.00	√	————	279
175080.00	-	————	189
175082.00	-	————	189
175101.00	√	————	281
175106.00	√	————	178,182,196
175107.00	√	————	178,182,196
175108.00	√	————	178,182,196
175109.00	√	————	178,182,196
175114.00	√	————	281
175115.00	√	————	281
175129.00	√	————	182, 196
175130.00	√	————	182, 196
175137.00	√	————	182, 196
175142.00	√	————	196
175143.00	√	————	182, 196
175144.00	√	————	182, 196
175145.00	√	————	182, 196
175146.00	√	————	182, 196
175156.00	√	————	189
175157.00	√	————	189
175158.00	√	————	189
175159.00	√	————	189
175181.00	√	————	279
175290.00	√	————	246
175291.00	√	————	246
175292.00	√	————	246
175294.00	√	————	279
175297.00	√	————	279

Catalogue No.	Availability	Model No.	Page No.
175298.00	√	————	74, 282
175303.00	√	————	279
175304.00	√	————	279
175305.00	√	————	282
175454.00	√	————	280
175455.00	√	————	281
175558.00	√	————	283
175563.00	√	————	168
175564.00	√	————	168
175565.00	√	————	168
175566.00	√	————	88, 168
175567.00	√	————	88, 168
175568.00	√	————	88, 168
175569.00	√	————	168
175570.00	√	————	168
175571.00	√	————	168
175572.00	√	————	88, 168
175573.00	√	————	88, 168
175574.00	√	————	88, 168
175575.00	√	————	168
175576.00	√	————	168
175577.00	√	————	168
175578.00	√	————	88, 168
175579.00	√	————	88, 168
175580.00	√	————	88, 168
175581.00	√	————	168
175582.00	√	————	88, 168
175583.00	√	————	168
175584.00	√	————	88, 168
175585.00	√	————	168
175586.00	√	————	88, 168
175587.00	√	————	168
175588.00	√	————	88, 168
175589.00	√	————	168
175590.00	√	————	88, 168
175593.00	√	————	112, 204
175594.00	√	————	112, 204
175595.00	√	————	112, 204
175596.00	√	————	112, 204
175597.00	√	————	112, 204
175598.00	√	————	112, 204
175599.00	√	————	112, 204
175601.00	√	————	280
175602.00	√	————	281
175603.00	√	————	280
175604.00	√	————	281
175614.00	√	————	282
175615.00	√	————	166
175619.00	√	————	179
175641.00	√	————	284
175642.00	√	————	284
175643.00	√	————	284
175644.00	√	————	284
175645.00	√	————	284
175646.00	√	————	279

Canada Catalogue Number Index

LEESON® Motors, Sub-FHP Gearmotors, Drives and Accessories

Catalogue No.	Availability	Model No.	Page No.
175647.00	√	————	279
175649.00	√	————	285
175658.00	√	————	281
175661.00	√	————	279
175663.00	√	————	282
175665.00	√	————	285
175666.00	√	————	285
175667.00	√	————	285
175668.00	√	————	285
175674.00	√	————	283
175675.00	√	————	283
175676.00	√	————	283
175677.00	√	————	283
175678.00	√	————	283
175684.00	√	————	284
175685.00	√	————	284
175686.00	√	————	284
175687.00	√	————	284
175691.00	√	————	279
175693.00	√	————	279
175694.00	√	————	281
175696.00	√	————	166
175697.00	√	————	166
175698.00	√	————	166
175699.00	√	————	166
175710.00	√	————	166
175711.00	√	————	166
175755.00	√	————	285
175762.00	√	————	166
175763.00	√	————	166
175764.00	√	————	166
175765.00	√	————	166
175766.00	√	————	166
175767.00	√	————	166
175768.00	√	————	166
175769.00	√	————	166
175770.00	√	————	166
175771.00	√	————	88, 167
175772.00	√	————	88, 167
175773.00	√	————	88, 167
175775.00	√	————	283
175784.00	√	————	182, 196
175792.00	√	————	282
175802.00	√	————	189
175805.00	√	————	280
175807.00	√	————	281
175810.00	√	————	179
175811.00	√	————	179
175812.00	√	————	179
175817.00	√	————	179
175818.00	√	————	179
175819.00	√	————	179
175827.00	√	————	179
175828.00	√	————	179
175829.00	√	————	179

Catalogue No.	Availability	Model No.	Page No.
175830.00	√	————	179
175831.00	√	————	179
175832.00	√	————	179
175833.00	√	————	179
175834.00	√	————	179
175844.00	√	————	279
175845.00	√	————	279
175846.00	√	————	282
175847.00	√	————	285
175850.00	√	————	179
175851.00	√	————	179
175852.00	√	————	179
175853.00	√	————	179
175854.00	√	————	179
175855.00	√	————	179
175856.00	√	————	179
175857.00	√	————	179
175871.00	√	————	282
175872.00	√	————	282
175873.00	√	————	282
175874.00	√	————	282
175875.00	√	————	282
175879.00	√	————	283
175880.00	√	————	283
175881.00	√	————	285
175890.00	√	————	179
175891.00	√	————	282
175892.00	√	————	285
175893.00	√	————	238
175894.00	√	————	282
175895.00	√	————	283
175896.00	√	————	283
175897.00	√	————	284
175898.00	√	————	284
175960.00	√	————	284
175961.00	√	————	282
175962.00	√	————	282
175963.00	√	————	282
175969.00	√	————	279
175990.00	√	————	179
175991.00	√	————	179
175994.00	√	————	179
175995.00	√	————	179
176002.00	√	————	283
176090.60	√	————	284
176091.60	√	————	284
176092.60	√	————	284
176093.60	√	————	284
176094.60	√	————	284
176095.60	√	————	284
176096.60	√	————	284
176097.60	√	————	284
176098.60	√	————	284
176105.00	√	————	254
176106.00	√	————	254

Catalogue No.	Availability	Model No.	Page No.
176107.00	√	————	254
176108.00	√	————	254
176109.00	√	————	254
176110.00	√	————	254
176111.00	√	————	254
176112.00	√	————	254
176113.00	√	————	254
176114.00	√	————	254
176115.00	√	————	254
176116.00	√	————	254
176117.00	√	————	254
176118.00	√	————	254
176120.00	√	————	254
176121.00	√	————	254
176122.00	√	————	254
176123.00	√	————	254
176124.00	√	————	254
176125.00	√	————	254
176127.00	√	————	254
176128.00	√	————	254
176129.00	√	————	254
176130.00	√	————	254
176131.00	√	————	254
176132.00	√	————	254
176133.00	√	————	256
176134.00	√	————	256
176135.00	√	————	256
176136.00	√	————	256
176137.00	√	————	256
176138.00	√	————	256
176139.00	√	————	256
176140.00	√	————	256
176141.00	√	————	256
176142.00	√	————	256
176143.00	√	————	256
176144.00	√	————	256
176145.00	√	————	256
176146.00	√	————	256
176147.00	√	————	256
176148.00	√	————	256
176149.00	√	————	256
176150.00	√	————	256
176151.00	√	————	256
176152.00	√	————	256
176177.00	√	————	169
176178.00	√	————	169
176179.00	√	————	169
176180.00	√	————	169
176181.00	√	————	169
176182.00	√	————	169
176183.00	√	————	169
176184.00	√	————	169
191200.00	√	C6T34NK26A	102
191201.00	√	C6T17NK29A	102
191202.00	√	C6T17NC328A	103

Canada Catalogue Number Index

LEESON® Motors, Sub-FHP Gearmotors, Drives and Accessories

Catalogue No.	Availability	Model No.	Page No.
191203.00	√	C6T34NK27A	102
191204.00	√	C6T17NK30A	102
191205.00	√	C6T17NC329A	103
191206.00	√	C6T34NK28A	102
191207.00	√	C6T17NK31A	102
191208.00	√	C6T17NC298A	103
191209.00	√	C6T34FK85A	102
191211.00	D	C6T17FK81A	102
191213.00	D	C6T17FC177A	103
191214.00	D	C143T17FC28A	103
191215.00	D	C6T34FK86A	102
191217.00	D	C6T17FK82A	102
191219.00	D	C6T17FC178A	103
191220.00	D	C145T17FC79A	103
191221.00	D	C6T34FK87A	102
191223.00	D	C6T17FK83A	102
191225.00	D	C6T17FC179A	103
191226.00	D	C145T17FC80A	103
191227.00	√	C6T34NK29A	104
191228.00	√	C6T17NK32A	104
191229.00	√	C6T17NC299A	105
191230.00	√	C6T34NK30A	104
191231.00	√	C6T17NK33A	104
191232.00	√	C6T17NC300A	105
191233.00	√	C6T34NK31A	104
191234.00	√	C6T17NK34A	104
191235.00	√	C6T17NC301A	105
191236.00	√	C6T34FK88A	104
191237.00	D	C143T34FK11A	104
191238.00	D	C6T17FK84A	104
191239.00	D	C143T17FK143A	104
191240.00	D	C6T17FC180A	105
191241.00	D	C143T17FC29A	105
191242.00	D	C6T34FK89A	104
191243.00	D	C143T34FK12A	104
191244.00	D	C6T17FK85A	104
191245.00	D	C145T17FK46A	104
191246.00	D	C6T17FC181A	105
191247.00	D	C145T17FC81A	105
191248.00	D	C6T34FK90A	104
191249.00	D	C145T34FK31A	104
191250.00	D	C6T17FK86A	104
191251.00	D	C145T17FK47A	104
191252.00	D	C6T17FC182A	105
191253.00	D	C145T17FC82A	105
191290.00	√	C6T17NC310A	103
191291.00	D	C6T17NK38A	102
191295.00	D	C6T17NK39	104
191297.00	D	————	104
191474.00	√	C6C34WK18	101
191475.00	√	C6C17WK14	101
191476.00	√	C6C34WK19	101
191477.00	√	C6C17WK15	101
191478.00	√	C6C34WK20	101
191479.00	√	C6C17WK16	101

Catalogue No.	Availability	Model No.	Page No.
191480.00	√	C6K34WK2	101
191481.00	√	C6K17WK1	101
191482.00	√	C145K34WK2	101
191483.00	√	C145K17WK3	101
191486.00	√	C143T34WK10A	102
191487.00	√	C143T17WK14A	102
191488.00	√	C143T34WK12A	102
191489.00	√	C145T17WK35A	102
191490.00	√	C145T34WK26A	102
191491.00	√	C145T17WK37A	102
191492.00	√	C145T34WK21A	102
191501.00	D	————	102
191502.00	D	————	102
191503.00	D	C6T34WK20	104
191504.00	D	C6T34WK21	104
191505.00	D	C6T34WK22	104
191506.00	D	————	103
191507.00	√	C6T17WC39A	103
191508.00	√	C6T17WC40A	103
191509.00	D	C6T17WC41	105
191510.00	√	C6T17WC42	105
191511.00	√	M4S17DH21A	105
191518.00	√	C143T34WK13A	104
191519.00	√	C6T17NK39	104
191520.00	√	C143T34WK14A	104
191521.00	√	C145T17WK47A	104
191522.00	√	C145T34WK32A	104
191523.00	√	————	104
191524.00	√	C145T34WK40A	104
191529.00	D	————	102
191530.00	D	————	102
191531.00	D	————	102
191532.00	D	C6T17WK35	104
191533.00	√	C6T17WK36	104
191534.00	√	C6T17WK37	104
191535.00	D	————	102
191543.00	√	A4P17VZ1A	101, 130
191544.00	√	A6P11VZ1A	101, 130
191545.00	√	A4P17VZ2A	101, 130
191546.00	√	A6P11VZ2A	101, 130
191547.00	√	A4P17VZ3A	101, 130
191548.00	√	A6P11VZ3A	101, 130
191558.00	√	C6T17WK41A	102
191560.00	√	C6T34WK23A	102
191561.00	√	C6T17WK43	102
191562.00	√	C6T34WK37A	102
191563.00	√	C6T17WK42A	102
191564.00	√	C6T17WC46A	103
191565.00	√	C143T17WC9A	103
191567.00	√	C6T17WC48A	103
191568.00	√	C145T17WC39A	103
191569.00	√	C6T17WC47A	103
191570.00	√	C145T17WK59A	103
191600.00	√	C6T17FK98A	104
191601.00	√	C6T34FK116A	104

Catalogue No.	Availability	Model No.	Page No.
191602.00	√	C6T17FK99A	104
191603.00	√	C6T34FK117FR	104
191604.00	√	C6T17FK100A	104
191605.00	√	C6T17FC207FR	105
191606.00	√	C143T17FC33A	105
191607.00	√	C6T17FC208A	105
191608.00	√	C145T17FC91FR	105
191609.00	√	C6T17FC209FR	105
191610.00	√	C145T17FC92A	105
192010.00	√	C63T34FZ1C	174
192011.00	√	C63T17FZ1C	174
192012.00	√	C71T11FZ1C	174
192020.00	√	C63T34FZ2C	174
192021.00	√	C71T17FZ1C	174
192022.00	C/A	C80T11FZ1C	174
192030.00	√	C71T34FZ1C	174
192031.00	√	C71T17FZ2C	174
192032.00	√	C80T11FZ2C	174
192040.00	√	C71T34FZ2C	174
192041.00	√	C80T17FZ1C	174
192042.00	√	C80T11FZ3C	174
192050.00	D	C80T34FZ1C	174
192051.00	D	C80T17FZ2C	174
192060.00	√	C80T34FZ2C	174
192088.00	√	C63T34FZ7	176
192089.00	√	C63T17FZ4	176
192097.00	√	C63T34FZ10C	176
192098.00	√	C71T17FZ7C	176
192106.00	C/A	C63T34FZ7	176
192107.00	√	C63T17FZ4	176
192115.00	√	C71T34FZ10C	176
192116.00	√	C80T17FZ7B	176
192124.00	D	C71T34FZ7	176
192125.00	D	C71T17FZ10	176
192133.00	√	C80T17FZ7	176
192200.00	√	C90T11FZ13A	174
192202.00	√	C90T17FZ13 A	174
192205.00	√	C90T17FZ16A	174
192208.00	√	C90T34FZ13A	174
192209.00	√	C90T34FZ14A	175
192230.00	√	C90T17FZ19A	176
192231.00	√	C90T34FZ19A	176
192232.00	√	C90T17FZ20A	176
192233.00	√	C90T34FZ19	176
192241.00	√	C80T17FZ2	174
192250.00	√	C80T17FZ57	176
192252.00	C/A	M71C34FZ1A	177
192253.00	C/A	M80C17FZ1A	177
192254.00	C/A	M80C34FZ2A	177
192255.00	C/A	M80C17FZ2A	177
192256.00	C/A	M80C34FZ3A	177
192257.00	C/A	M80K17FZ3A	177
192258.00	C/A	M80K34FZ4A	177
192259.00	C/A	M80K17FZ4A	177
192260.00	C/A	M80K34FZ5A	177

Canada Catalogue Number Index

LEESON® Motors, Sub-FHP Gearmotors, Drives and Accessories

Catalogue No.	Availability	Model No.	Page No.
192261.00	C/A	M90K17FZ1A	177
192264.00	√	C80T34FZ55A	174
192267.00	√	C80T34FZ51A	176
193300.00	C/A	C100T11FZ20A	174
193301.00	√	C100T17FZ41A	175
193302.00	C/A	C112T11FZ21A	175
193303.00	√	C100T34FZ20A	175
193304.00	√	C100T17FZ42A	175
193305.00	C/A	C132T11FZ58A	175
193306.00	√	C112T34FZ24A	175
193307.00	√	C112T17FZ21A	175
193308.00	C/A	C132T11FZ59A	175
193309.00	√	C132T34FZ45A	175
193310.00	√	C132T17FZ43A	175
193311.00	C/A	C132T11FZ60A	175
193312.00	√	C132T34FZ46A	175
193313.00	√	C132T17FZ44A	175
193314.00	C/A	C160T11FZ39A	175
193315.00	√	C160T34FZ59A	175
193316.00	√	C160T17FZ43A	175
193317.00	C/A	C160T11FZ40A	175
193318.00	√	C160T34FZ60A	175
193319.00	√	C160T17FZ44A	175
193320.00	√	C180T11FZ20A	175
193321.00	√	C160T34FZ61A	175
193322.00	√	C180T17FZ41A	175
193323.00	C/A	C200T11FZ39A	175
193324.00	C/A	C180T34FZ19A	175
193325.00	√	C180T17FZ42A	175
193326.00	√	C200T11FZ40A	175
193327.00	√	C200T34FZ37A	175
193328.00	√	C200T17FZ21A	175
193329.00	√	C225T11FZ21A	175
193330.00	√	C200T34FZ38A	175
193331.00	√	C225T17FZ21A	175
193332.00	C/A	C250T11FZ19A	175
193379.00	√	C100T17FZ47A	176
193380.00	C/A	C100T34FZ23A	176
193381.00	√	C100T17FZ48A	176
193382.00	√	C112T34FZ27A	176
193383.00	√	C112T17FZ24A	176
193384.00	√	C132T34FZ51A	176
193385.00	√	C132T17FZ49A	176
193386.00	√	C132T34FZ52A	176
193387.00	√	C132T17FZ50A	176
193388.00	√	C160T34FZ68A	177
193389.00	√	C160T17FZ49A	177
193390.00	√	C160T34FZ69A	177
193391.00	√	C160T17FZ50A	177
193392.00	C/A	C160T34FZ70A	177
193393.00	√	C180T17FZ45A	177
193394.00	√	C180T34FZ21A	177
193395.00	√	C180T17FZ46A	177
193396.00	C/A	C200T34FZ39A	177
193397.00	√	C200T17FZ22A	177

Catalogue No.	Availability	Model No.	Page No.
193398.00	√	C200T34FZ40A	177
193399.00	C/A	C225T17FZ22A	177
193406.00	√	C160T11FZ45A	177
193407.00	√	C180T11FZ22A	177
193408.00	C/A	N200T11FZ70A	177
193409.00	C/A	C200T11FZ23A	177
193410.00	C/A	N225T11FZ22A	177
193411.00	√	N250T11FZ20A	177
193416.60	√	C225T34FZ1A	175
193417.60	√	C225T17FZ5A	175
193418.60	√	C280T11FZ1A	175
193419.60	√	C250T34FZ1A	175
193420.60	√	C250T17FZ2A	175
193421.60	√	C280T11FZ2A	175
193422.60	√	C280T34FZ1A	175
193423.60	√	C280T17FZ3A	175
193424.60	√	C315T11FZ1A	175
194000.00	√	C182T34WK2	102
194001.00	√	C182T17WK21	102
194002.00	√	C184T34WK21	102
194003.00	√	C184T17WK25	102
194004.00	√	C213T34WK9	102
194005.00	√	C213T17WK19	102
194006.00	√	C215T34WK16	102
194007.00	√	C215T17WK19	102
194102.00	√	C182T34FK1A	104
194103.00	√	C182T17FK1A	104
194104.00	√	C184T34FK1A	104
194105.00	√	C184T17FK1A	104
194106.00	√	C213T17FK1A	104
194107.00	√	C215T34FK1A	104
194108.00	√	C215T17FK1A	104
194222.00	C/A	C80T17FZ47A	169
194223.00	C/A	C90T17FZ31A	169
194224.00	C/A	C90T17FZ32A	169
194225.00	C/A	C100T17FZ49A	169
194226.00	C/A	C112T17FZ30A	169
194227.00	C/A	C112T17FZ31A	169
194288.00	√	C213T34FK1A	104
41181400	√	————	286
41211800	√	————	286
41252100	√	————	286
41282500	√	————	286
41322800	√	————	286
41363200	√	————	286
41403600	√	————	286
41444000	√	————	286
825201.00	C/A	254TPFSA20057	64
825202.00	C/A	256TPFSA20058	64
825203.00	C/A	284TPFSA20059	64
825204.00	C/A	286TPFSA20060	64
825387.00	C/A	286TPFSA20125	64
851034.00	√	C256K17DB1A	126
851150.00	√	C256K17FB1	25, 126
1110013.00	√	CZ6T17VK71A	115

Catalogue No.	Availability	Model No.	Page No.
1110014.00	√	CZ6T17WK77A	115
102021.00B	√	M4P17DC53	159
110145.00	√	C6T34FB1E	48
111080MD.00	√	M6P17DR1G	159
111292-22	√	————	57
120344-22	√	————	57
121945CB	√	C143T17DB22A▶	44
121946CB	√	C145T17DB75A▶	44
121948CB	√	C145T17DB76A▶	44
131519CB	√	C182T17DB37C▶	40
131520CB	√	C184T17DB44C▶	40
132261CB	√	C182T17DB58A▶	44
132262CB	√	C184T17DB80A▶	44
150262.22	√	————	58
150264.22	√	————	58
150266.22	√	————	59
150268.22	√	————	59
150269.22	C/A	————	51
150270.22	√	————	59
150281.22	√	————	58
150750.22	√	————	58
170006CB	√	C256T17DB5D▶	40
170009CB	√	C284T17DB7C▶	40
170013CB	√	C286T17DB8D▶	40
170017CB	√	C324T17DB8D▶	40
170021CB	√	C326T17DB5D▶	40
170025CB	√	C364T17DB7E▶	40
170046CB	√	C256T17DB6▶	44
170048CB	√	C284T17DB8▶	44
170050CB	√	C286T17DB9▶	44
170052CB	√	C324T17DB9▶	44
170054CB	√	C326T17DB6▶	44
170065CB	√	C254T17DB9D▶	40
170140BRK	√	————	164
170142CB	√	C21317DB44C▶	40
170144CB	√	C215T17DB49D▶	40
170157BRK	√	————	164
170200CB	√	C364T17DB7▶	44
170207BRK	√	————	164
170209CB	√	C213T17DB45▶	44
170211CB	√	C215T17DB50▶	44
170212BRK	√	————	164
170216CB	√	C254T17DB10▶	44
170239CB	√	C364T17FB7F▶	62
171320BRK	√	————	164
171321BRK	√	————	164
171322BRK	√	————	164
171323BRK	√	————	164
171769.00	√	C182T11FB34A	57
175771-5	√	————	167
175772-5	√	————	167
175773-5	√	————	167
41004800	√	————	286
41005600	√	————	286
41014300	√	————	286

Canada Catalogue Number Index

LEESON® Motors, Sub-FHP Gearmotors, Drives and Accessories

Catalogue No.	Availability	Model No.	Page No.
41014500	√	————	286
41018200	√	————	286
41018202	√	————	286
41018400	√	————	286
41018402	√	————	286
41021300	√	————	286
41021302	√	————	286
41021500	√	————	286
41021502	√	————	286
41025402	√	————	286
41025602	√	————	286
41028402	√	————	286
41028602	√	————	286
41032402	√	————	286
41032602	√	————	286
41036402	√	————	286
41036502	√	————	286
41040402	√	————	286
41040502	√	————	286
41044402	√	————	286
41044502	√	————	286
41044702	√	————	286
41044902	√	————	286
A009031.00	√	C6T17FB171A	47
A009034.00	√	C6T17FB168A	47
A009045.00	√	C6T17FC241A	52
A009046.00	√	C6T17FC243A	52
A009047.00	√	C6T17FC237A	52
A009176.00	√	C6T17FC242A	61
A009177.00	√	C6T17FC238A	61
A009178.00	√	C6T17FB169A	57
A009199.00	√	C6T17FB172A	57
A009204.00	D	C6T17FC240A	61
A009206.00	D	C6T17F170A	57
A009212.00	√	C6T17FB167A	57
A009580.00	√	A6K17NB30	131
A009581.00	√	A6K17NB29	131
A009594.00	√	A6K17NB32	131
A009595.00	√	A145K17NB2	131
A009644.00	C/A	A6P8NC7B	124, 141
A009711.00	√	C6T17FC173A	61
A009782.00	√	A6K17NB33	131
A009893.00	D	C6T17FB176A	57
A019341.00	√	C145K34F3A	25
A090405.00	√	A4K17DR15A	135, 142
A090585.00	√	A4K17DR13A	135, 142
A090602.00	√	A4K17DR14A	135, 142
A099231.00	√	M4P17DJ31A	159
A099234.00	√	M4P17DJ30A	159
A099241.00	√	M4P17DJ32A	159
A099250.00	√	A4P8NZ17	141
A099251.00	√	A4P8NC3	141
A099260.00	C/A	A4P11NB52	124
A099261.00	√	A4P11NB53	124
A099262.00	√	A4P11NZ239	124

Catalogue No.	Availability	Model No.	Page No.
A099729.00	√	A4P17NZ103A	130
A099730.00	√	A4P17NZ137A	130
A099731.00	C/A	A4P17NZ104A	130
A099732.00	C/A	A4P17NZ105A	130
A099733.00	√	A4P17NZ98A	130
A099836.00	√	A4P8NR2A	124
A099847.00	√	A6P11NB5	124
ARM12FP	√	————	131
C170523	C/A	————	35
E100000.00	√	A4K17DH17	15
E100001.00	√	A4K17DH8	15
E100002.00	√	A4K17DH19	15
E100004.00	√	M4K17DH21	15
E100006.00	√	C4K17DH5	15
E100007.00	√	C4K17DH6	15
E100010.00	√	A4K17DJ11	21, 133
E100011.00	√	A4K17DJ13	21, 133
E100014.00	√	C4K17DJ9	21, 133
E100015.00	√	C4K17DJ10	21, 133
E100018.00	√	M4K17DC20	18
E100019.00	√	M4K17DC23	18
E100020.00	√	A4K17DC22	18
E100023.00	√	C4K17DC13	18
E100024.00	√	C4K17DC12	18
E100025.00	√	C4K17DC14	18
E100027.00	√	C4T17DH45	33
E100045.00	√	M4K17DJ13	21, 133
E100052.00	√	M4K34DH12	15
E100053.00	√	M4K34DH13	15
E100054.00	√	A4K34DC7	18
E100055.00	√	A4K34DC8	18
E100056.00	√	C4T34DC46	38
E100063.00	√	A4K17DJ12	21, 133
E100064.00	√	A4K17DJ79	21, 133
E100109.00	√	A4K17DR18	21, 133
E100110.00	√	A4K17DR19	21, 133
E100111.00	√	A4K17DR17	21, 133
E100115.00	√	A4K17D11A	15
E100116.00	√	A4K17DB12	15
E100141.00	√	C4T17DH49A	41
E100141C	√	C4T17DH49A▶	44
E100143.00	√	56T17DRR70028A3A	41
E100153.00	√	56T17DRR0027A3A	41
E100184.00	√	C4K34DB1	15
E100210.00	√	C4T17DJ25	45, 136
E100336.00	√	C4K34DH6	15
E100337.00	√	C4K34DH5	15
E100338.00	√	C4K17DB5	15
E100340.00	√	C4K34DH4	15
E100354.00	√	C4K34DC4	18
E100355.00	√	A4K34DC6A	18
E100356.00	√	C4K34DC3	18
E100357.00	√	C4K34DC5	18
E100375.00	√	C4T34DC45	38
E100378.00	√	C4T34DC3	38

Catalogue No.	Availability	Model No.	Page No.
E100446.00	√	C4T17DB17	33
E100588.00	√	M4K17DH17	15
E100600.00	√	C4T34DK18	40
E100603.00	√	A4K34DJ1	21, 134
E100828.00	√	56T17DRS70006A3A	45, 137
E100829.00	√	C4T17DJ12C	45, 137
E101015.00	√	A4K17DR20	21, 133
E101423.00	√	M4K17DB13	15
E101431.00	√	A4K34DR1	21, 133
E101432.00	√	A4K34DR2	21, 133
E101433.00	√	A4K34DR3	21, 134
E101434.00	√	A4K34DR4	21, 133
E101447.00	√	C4T34DB7	33
E101448.00	√	C4T34DH11A	33
E101449.00	√	C4T34DH8	33
E101520.00	√	A4T17DJ26	45, 136
E101521.00	√	A4K17DC19	18
E101522.00	√	A4K17DC21	18
E101611.00	√	A4K17DJ14	21, 133
E101639.00	√	A4T34DJ4D	45, 136
E101640.00	C/A	————	45, 136
E101641.00	√	A4T34DK9	45, 136
E101651.00	√	C4K17DK5	20
E101773.00	√	C4T34DJ8	45, 136
E102695.00	√	C4T17DC56	38
E102971.00	√	C4T34DK9	40
E103014.00	√	C4T17DC55	38
E103017.00	√	C4T17DH46A	33
E103021.00	C/A	C4T17DK9	40
E103023.00	√	C4K17DK2	20
E103024.00	√	C4K34DK3	20
E103025.00	√	C4K34DK4	20
E103083.00	C/A	M4K17DH18A	20
E103084.00	√	M4K17DH20A	20
E104018.00	√	C4K11DH1	15
E110000.00	√	A6K17DB56	16
E110002.00	√	C6K11DB5	15
E110003.00	√	C6K11DB6	15
E110004.00	√	C6K17DB52	16
E110005.00	√	C6K17DB53	16
E110007.00	√	A6K17DR50	21, 134
E110027.00	√	C6T11DB22	33
E110028.00	√	C6T11DB23	33
E110036.00	√	M6K17DC57	18
E110037.00	√	M6K17DC55A	19
E110052.00	√	C6T17DR41	45, 136
E110054.00	√	A6K17DR49	21, 134
E110097.00	√	M6K34DB37	16
E110111.00	√	C6T34DC107	38
E110167.00	√	M6K17DB54	16
E110179.00	√	C6T17DC100A	44
E110202.00	√	C6T17DB125A	41
E110220.00	√	C6K17DC51	18
E110360.00	√	C6K34DB31	16
E110361.00	√	C6K34DB32	16

Canada Catalogue Number Index

LEESON® Motors, Sub-FHP Gearmotors, Drives and Accessories

Catalogue No.	Availability	Model No.	Page No.
E110363.00	√	C6K34DB33	16
E110381.00	√	C6K11DC5	18
E110382.00	√	C6K11DC6	18
E110384.00	√	C6K34DC25	18
E110387.00	√	C6K34DC26	19
E110388.00	√	C6K17DC52	19
E110390.00	√	C6K34DC27	19
E110425.00	√	C6T11DH24A	33
E110426.00	√	C6T34DB40A	33
E110433.00	√	C6T17DR38	45, 136
E110434.00	√	C6T11DC12	38
E110437.00	√	C6T34DC106	38
E110478.00	√	A6K34DR6	21, 134
E110479.00	√	A6K34DR7	21, 134
E110579.00	√	U6K17DR48	21, 134
E110702.00	√	C6T11DB26A	41
E110703.00	√	C6T11DB27A	41
E110705.00	√	C6T11DB25A	41
E111310.00	√	A6T17DB124	34
E111311.00	√	A6T17DR40	45, 136
E111393.00	√	56T17DRS70005A3A	45, 137
E113027.00	√	C6K17DR43	21, 134
E113266.00	√	M6K17DB55	16
E113281.00	√	M56B17DRK70002A3A	20
E113293.00	√	C6T34DB37	34
E113334.00	√	A6K34DC32A	19
E113335.00	√	A6K34DC29A	19
E113336.00	√	A6K34DC28	19
E113337.00	√	A6K34DC31	18
E113608.00	√	U56B17DRS70010A3A	21, 134
E113631.00	√	M6K34DB35	16
E113632.00	√	M6K34DB40A	16
E113633.00	√	U6K34DR8	21, 134
E113700.00	√	M6K17DK47	20
E113846.00	√	A6T17DR47	45, 136
E113847.00	√	A6T17DR48	45, 136
E113894.00	√	C6T34DC104	39
E113895.00	C/A	A6T34DR44	45, 136
E113896.00	√	U6T34DR43	45, 136
E113897.00	√	A6T34DR42	45, 136
E113930.00	√	C6K17DK45	20
E113932.00	√	C6K17DK46	20
E114192.00	√	C6T34DR35	45, 136
E114194.00	C/A	C6T34DR3	45, 136
E114196.00	√	C6T34DR38	45, 136
E114197.00	√	C6T17DR39	45, 136
E114214.00	√	M6K34DK263	20
E114215.00	√	M6K34DK27	20
E114218.00	√	C6T34DK25	40
E114420.00	√	C6T34DC105	39
E114934.00	√	C6T17DC68	38
E115825.00	√	C6T17DB114	33
E115826.00	√	C6T17DB115	34
E115827.00	√	C6T17DB117	33
E116704.00	√	M56B17DRR70033A3AA	16

Catalogue No.	Availability	Model No.	Page No.
E116706.00	√	M6K34DK28A	17
E116707.00	√	M6K34DK28A	20
E116728.00	√	C6T11DC13	38
E116738.00	√	C6T17DB95	33
E116740.00	√	C6T17DC80	38
E116741.00	√	C6T17DC81	38
E116742.00	√	C6T17DC82	39
E116752.00	√	C6T17DB92	33
E116753.00	√	C6T34DB31	33
E116754.00	√	C6T17DB91	33
E116755.00	√	C6T34DB38A	34
E116756.00	√	C6T17DB96	34
E116762.00	√	C6T17DK30	40
E116763.00	√	C6T17DK33	40
E116764.00	√	C6T17DK32	40
E116765.00	√	C6T17DK31	40
E116769.00	√	C6K34DK23	20
E116770.00	√	C6K34DK24	20
E116771.00	√	C6K34DK25	20
E116784.00	√	C6T34DK16	40
E116785.00	√	C6T34DK20	40
E119348.00	√	C6K17DB51	15
E119349.00	√	C6K17DC50	18
E119350.00	√	C6K17DK44	20
E119351.00	√	C6T17DB113	33
E119352.00	√	C6T17DC97	38
E119353.00	√	C6T17DK40	40
E119360.00	√	C6T17DR40	45, 136
E119361.00	√	C6T17DR41	45, 136
E119362.00	√	C6K17DR44	21, 134
E119854.00	√	A56B17DRR70006A3A	15
E119855.00	√	M5617DRR70014A3A	15
E119856.00	√	A56B17DRS70004A3A	21, 134
E119857.00	√	M56B17DRC70004A3A	18
E119858.00	√	M56B17DRS70007A3A	21, 134
E119859.00	√	M56B17DRS70006A3A	21, 134
E119860.00	√	A56B17DRS70005A3A	21, 134
E119862.00	√	A56B17DRC70003A3A	18
E119863.00	√	M56B17DRK70003A3A	20
E119864.00	√	A56B17DRS70003A3A	21, 134
E119879.00	√	56T17DRS70001A3A	45, 136
E119880.00	√	56T17DRS70002A3A	45, 136
EEPM1RA	√	————	269
G132249.00	D	C182T11FC4	53
G150261.22	C/A	————	50
G150263.22	C/A	C324T8FB3	50
G150265.22	C/A	C326T8FB2	50
G150282.22	√	C284T8FB2	50
G151355.22	C/A	C254T8FB5	49
G151356.22	C/A	C256T8FB42	49
G151518.00	D	C447T17DB9	37
H682	√	5KH32ENA443AX	78
H683	√	5KH33GNA444AX	78
H684	√	5KH36MNA445AX	78
H712	√	5KH32GNB815X	78

Catalogue No.	Availability	Model No.	Page No.
HG450	√	5KH32GNB812X	78
HG451	√	5KH32GNB813AX	78
HG714	√	5KH37PNA479AX	78
HSK-0001	√	————	245
HSK-0002	√	————	244
HSK-0004	√	————	245
KIT 210TCFW	√	————	279
KDRA1H	√	————	273
KDRA1L	√	————	273
KDRA25H	√	————	272
KDRA25L	√	————	272
KDRA26H	√	————	272
KDRA26L	√	————	272
KDRA27H	√	————	272
KDRA27L	√	————	272
KDRA28H	√	————	272
KDRA28L	√	————	272
KDRA2H	√	————	273
KDRA2L	√	————	273
KDRA31P	√	————	276
KDRA33P	√	————	276
KDRA34P	√	————	276
KDRA35P	√	————	276
KDRA36P	√	————	276
KDRA3H	√	————	273
KDRA3L	√	————	273
KDRA43H	√	————	273
KDRA44H	√	————	273
KDRA45H	√	————	273
KDRA46L	√	————	273
KDRA47L	√	————	273
KDRA48L	√	————	273
KDRA49L	√	————	273
KDRA4H	√	————	273
KDRA4L	√	————	273
KDRA50H	√	————	273
KDRA50L	√	————	273
KDRA51H	√	————	273
KDRA51L	√	————	273
KDRA52H	√	————	273
KDRA52L	√	————	273
KDRA53H	√	————	272
KDRA53L	√	————	272
KDRA54H	√	————	272
KDRA54L	√	————	272
KDRA55H	√	————	273
KDRA55L	√	————	273
KDRA56L	√	————	273
KDRA5H	√	————	273
KDRA5L	√	————	273
KDRA6H	√	————	273
KDRA6L	√	————	273
KDRA7H	√	————	273
KDRA7L	√	————	273
KDRA8H	√	————	273

Canada Catalogue Number Index

LEESON® Motors, Sub-FHP Gearmotors, Drives and Accessories

Catalogue No.	Availability	Model No.	Page No.
KDRA8L	√	————	273
KDRA9H	√	————	273
KDRA9L	√	————	273
KDRB1L	√	————	273
KDRB22L	√	————	272
KDRB23L	√	————	272
KDRB25H	√	————	272
KDRB26H	√	————	272
KDRB2H	√	————	273
KDRB2L	√	————	273
KDRB42H	√	————	273
KDRB43H	√	————	273
KDRB43L	√	————	273
KDRB44H	√	————	273
KDRB44L	√	————	273
KDRB45L	√	————	273
KDRC1H	√	————	273
KDRC1L	√	————	273
KDRC22H	√	————	272
KDRC22L	√	————	272
KDRC31P	√	————	276
KDRC3H	√	————	273
KDRC43H	√	————	273
KDRC43L	√	————	273
KDRC44L	√	————	273
KDRD1L	√	————	273
KDRD21H	√	————	272
KDRD22H	√	————	272
KDRD24L	√	————	272
KDRD25L	√	————	272
KDRD26L	√	————	272
KDRD2L	√	————	273
KDRD31P	√	————	276
KDRD32P	√	————	276
KDRD33P	√	————	276
KDRD34P	√	————	276
KDRD35P	√	————	276
KDRD41H	√	————	273
KDRD42L	√	————	273
KDRE2H	√	————	273
KDRE42H	√	————	273
KDRF1H	√	————	273
KDRF24L	√	————	272
KDRF25H	√	————	272
KDRF25L	√	————	272
KDRF26H	√	————	272
KDRF26L	√	————	272
KDRF28H	√	————	272
KDRF2H	√	————	273
KDRF2L	√	————	273
KDRF31P	√	————	276
KDRF32P	√	————	276
KDRF33P	√	————	276
KDRF3L	√	————	273
KDRF44H	√	————	273

Catalogue No.	Availability	Model No.	Page No.
KDRF45H	√	————	273
KDRF45L	√	————	273
KDRF46L	√	————	273
KDRF47L	√	————	273
KDRF4H	√	————	273
KDRF4L	√	————	273
KDRG1H	√	————	273
KDRG1L	√	————	273
KDRG22L	√	————	272
KDRG25H	√	————	272
KDRG2L	√	————	273
KDRG31P	√	————	276
KDRG3H	√	————	273
KDRG3L	√	————	273
KDRG44H	√	————	273
KDRG45H	√	————	273
KDRG45L	√	————	273
KDRG47L	√	————	273
KDRH1L	√	————	273
KDRH22L	√	————	272
KDRH23H	√	————	272
KDRH24H	√	————	272
KDRH2H	√	————	273
KDRH2L	√	————	273
KDRH31P	√	————	276
KDRH3L	√	————	273
KDRH42H	√	————	273
KDRH43H	√	————	273
KDRH43L	√	————	273
KDRH44L	√	————	273
KDRI21H	√	————	272
KDRI22H	√	————	272
KDRI23L	√	————	272
KDRI24L	√	————	272
KDRI2H	√	————	273
KDRI31P	√	————	276
KDRI32P	√	————	276
KDRI41H	√	————	273
KDRI42L	√	————	273
KDRJ1H	√	————	273
KDRJ21H	√	————	272
KDRJ22H	√	————	272
KDRJ23L	√	————	272
KDRJ24L	√	————	272
KDRJ2L	√	————	273
KDRJ31P	√	————	276
KDRJ32P	√	————	276
KDRJ41H	√	————	273
KDRJ45L	√	————	273
KDRL1H	√	————	273
KDRL2H	√	————	273
KDRL3H	√	————	273
KDRL46H	√	————	273
KDRL47H	√	————	273
KDRL48H	√	————	273

Catalogue No.	Availability	Model No.	Page No.
KLRCAB1	√	————	276
KLRCAB2	√	————	276
KLRCAB3	√	————	276
KLRCAB4	√	————	276
KLRCAB5	√	————	276
KTP-0001	√	————	247, 269
KTP-0010	√	————	247, 269
KTP-0023	√	————	247, 269
KTW-0002	√	————	247
LGC400-10	√	————	245
LM24808	√	————	283
LM24808.00	√	————	123
LM24810	√	————	283
LM24810.00	√	————	123
LM28867	√	SSD4S10/15T6006YEH2	160, 162
LM28868	√	SSD4S10/15T61YEH2	160, 162
LM28873	√	SSD4P15/20T6006YEH2	160, 162
LM28874	√	SSD4P15/20T61YEH2	160, 162
LM28879	√	SSD4P20/25T6006YEH2	160, 162
LM28880	√	SSD4P20/25T61YEH2	160, 162
LM28897	√	SD4S40/50T6006YEH2	161, 162
LM28898	√	SD4S40/50T61YEH2	161, 162
LM28903	√	SD4S50/60T6006YEH2	161, 162
LM28904	C/A	SD4S50/60T61YEH2	161, 162
LM28909	C/A	SD4P60/75T6006YEH2	161, 162
LM28910	√	SD4S60/75T61YEH2	161, 162
LM28914	C/A	SD4P75/100T61YEH2	161, 162
LM29850	√	CCD4S25/30T6006YEH2	160, 162
LM29851	√	CCD4S25/30T61YEH2	160, 162
LM29852	√	CCD4P30/40T6006YEH2	161, 162
LM29853	√	CCD4P30/40T61YEH2	161, 162
LM30092	C/A	SSD2P10/15T61YEH2	160, 162
LM30093	√	SSD2P15/20T6006YEH2	160, 162
LM30094	√	SSD2P15/20T61YEH2	160, 162
LM30095	√	SSD2P20/25T6006YEH2	160, 162
LM30096	√	SSD2P20/25T61YEH2	160, 162
LM30097	√	SSD2P25/30T6006YEH2	160, 162
LM30098	√	SSD2P25/30T61YEH2	160, 162
LM30099	√	CCD2P30/40T6006YEH2	161, 162
LM30100	√	CCD2P30/40T61YEH2	161, 162
LM30102	C/A	CCD2P40/50T61YEH2	161, 162
LM32651	√	SD4B40/50T61YEH2	161, 162
LM32663	√	SF4B50/60T61YEH2	161, 162
LM33046	√	CCD4B25/30T61YEH2	160, 162
LM33048	C/A	CCD4B30/40T61YEH2	161, 162
M002256.00	D	M6C17FB142	123
M009087.00	D	M6C17FB144A	123
M064076.00	D	————	123
M099251.00	D	A4P8NC2	141
M1110003.00	√	980.535	192
M1110006.00	√	————	201
M1110014.00	√	————	192
M1110015.00	√	980.539	192
M1110024.00	√	980.542	181, 195
M1110025.00	√	980.543	184, 200

Canada Catalogue Number Index

LEESON® Motors, Sub-FHP Gearmotors, Drives and Accessories

Catalogue No.	Availability	Model No.	Page No.
M1110026.00	√	980.544	184, 200
M1115000.00	√	985.622	209
M1115001.00	√	985.621	209
M1115002.00	√	985.620	209
M1115018.00	√	985.504	219
M1115019.00	√	985.505	219
M1115020.00	√	985.506	219
M1115021.00	√	985.509	219
M1115022.00	√	985.507	219
M1115024.00	√	985.602	211
M1115025.00	√	985.603	211
M1115026.00	√	985.604	211
M1115027.00	√	985.605	211
M1115028.00	√	985.606	211
M1115029.00	√	985.601	211
M1120013.00	√	CM31D17NZ1	192
M1120014.00	√	CM31D17NZ2	192
M1120027.00	√	CM31D18NZ10	192
M1120039.00	√	CM31D17NZ5	192
M1120040.00	√	CM31D17NZ6	201
M1120041.00	√	CM31D17NZ7	192
M1120042.00	√	CM31D17NZ8	192
M1120043.00	√	CM31D17NZ9	192
M1120044.00	√	CM31D17NZ10	201
M1120045.00	√	CM31D17NZ11	192
M1120046.00	√	CM31D17NZ26	201
M1120058.00	√	CM31D35NZ6	192
M1120059.00	√	CM31D35NZ3	192
M1120060.00	√	CM31D35NZ4	192
M1120062.00	√	CM31D35NZ5	192
M1120181.00	√	CM31D17VZ1	90, 193
M1120182.00	√	CM31D17VZ2	90, 193
M1120183.00	√	CM31D17VZ3	90, 193
M1120184.00	√	CM31D17VZ4	90, 193
M1120185.00	√	CM32D25VC1	90, 193
M1120186.00	√	CM32D25VC2	90, 193
M1125002.00	√	985.627	209
M1125003.00	√	985.628	209
M1125004.00	√	985.626	209
M1125005.00	√	985.629	209
M1125006.00	√	985.630	209
M1125033.00	√	985.632	209
M1125034.00	√	985.633	209
M1125035.00	√	985.631	209
M1125036.00	√	985.634	209
M1125037.00	√	985.635	209
M1125038.00	√	985.617	211
M1125039.00	√	985.614	211
M1125040.00	√	985.618	211
M1125041.00	√	985.619	211
M1125046.00	√	CM31D18NZ41	209
M1125047.00	C/A	985.624	209
M1125048.00	C/A	985.625	209
M1125050.00	√	CM31P17NZ1	229
M1125069.00	√	985.611	211
M1125070.00	√	985.612	211
M1125071.00	√	985.615	211
M1125072.00	√	985.610	211
M1125073.00	√	985.613	211
M1125074.00	√	985.616	211
M1125080.00	√	CM31P17NZ19	236
M1125081.00	√	CM31P17NZ18	236
M1125082.00	√	CM31P17NZ17	236
M1125083.00	√	CM31P17NZ16	236
M1125084.00	√	CM31P17NZ15	236
M1125092.00	√	985.607	211
M1125093.00	√	985.609	211
M1125094.00	C/A	985.608	211
M1125127.00	√	CM31P17FZ1	229
M1125128.00	√	CM31P17FZ2	229
M1125129.00	√	CM31P17FZ3	229
M1125130.00	√	CM31P17FZ4	229
M1125131.00	√	CM31P17FZ5	229
M1125132.00	√	CM31P17FZ6	229
M1125133.00	√	CM31P17FZ7	229
M1125213.00	√	985.653	209
M1125214.00	√	985.654	209
M1125215.00	C/A	985.655	209
M1125217.00	√	985.657	211
M1125218.00	√	985.658	211
M1125219.00	√	985.659	211
M1125220.00	√	985.660	211
M1125247.00	√	985.688	213
M1125248.00	√	985.689	213
M1125249.00	C/A	985.690	213
M1125250.00	√	985.691	213
M1125251.00	C/A	985.692	213
M1125252.00	√	985.693	213
M1125253.00	√	985.694	213
M1125254.00	C/A	985.695	213
M1125255.00	C/A	985.696	213
M1125256.00	C/A	985.697	213
M1125261.00	√	CM31D17VZ5	93, 223
M1125262.00	√	CM31D17VZ6	93, 223
M1125263.00	√	CM31D17VZ7	93, 223
M1125264.00	√	CM31D17VZ8	93, 223
M1125265.00	√	CM31D17VZ9	93, 223
M1125266.00	√	CM31D17VZ10	93, 223
M1125267.00	√	CM31D17VZ11	93, 223
M1125268.00	√	CM31D25VZ1	95, 225
M1125269.00	√	CM32D25VZ1	95, 225
M1125270.00	√	CM32D25VZ2	95, 225
M1125271.00	√	CM32D25VZ3	95, 225
M1125272.00	√	CM32D25VZ4	95, 225
M1125273.00	√	CM31D25VZ2	95, 225
M1125274.00	√	CM32D25VZ5	95, 225
M1125275.00	√	CM31D25VZ3	97, 227
M1125276.00	√	CM31D25VZ4	97, 227
M1125277.00	√	CM32D25VZ6	97, 227
M1125278.00	√	CM32D25VZ7	97, 227
M1125275.00	√	CM32D25VZ8	97, 227
M1125280.00	√	CM32D25VZ9	97, 227
M1125281.00	√	CM32D25VZ10	97, 227
M1125282.00	C/A	CM31T17NZ26	240
M1125283.00	√	CM31T17NZ27	240
M1125284.00	√	CM31T17NZ28	240
M1125285.00	√	CM31T17NZ29	240
M1130053.00	√	CM34D17NC5	192
M1130054.00	√	CM34D17NC6	192
M1130055.00	√	CM34D17FC2	192
M1130118.00	√	CM34D17NC8	192
M1130119.00	C/A	CM34D17NC9	192
M1130120.00	√	CM34D17FC4	192
M1130136.00	√	CIM34D18NC5	181, 195
M1130137.00	√	CIM34D18NC6	181, 195
M1130138.00	√	CIM34D18FC1	181, 195
M1130139.00	√	CIM34D18FC2	181, 195
M1130140.00	√	CIM34D30NC1	181, 195
M1130141.00	√	CIM34D30NC2	181, 195
M1130142.00	√	CIM34D30NC3	181, 195
M1130143.00	√	CIM34D30FC1	181, 195
M1130146.00	C/A	CIM34D18ND1	180, 194
M1130147.00	√	CIM34D18ND2	180, 194
M1130148.00	√	CIM34D18FD1	180, 194
M1130149.00	√	CIM34D18FD2	180, 194
M1130150.00	√	CIM34D30ND1	180, 194
M1130151.00	√	CIM34D30ND2	180, 194
M1130152.00	√	CIM34D30ND3	180, 194
M1130153.00	√	CIM34D30FD1	180, 194
M1130206.00	√	CIM34D30FD2	184, 200
M1130207.00	√	CIM34D18FD6	184, 200
M1130296.00	√	CIM34D30FC7	184, 200
M1130297.00	√	CIM34D18FC10	184, 200
M1135038.00	√	CM34D25NZ6	219
M1135039.00	√	CM34D25NZ7	219
M1135040.00	√	CM34D25NZ8	219
M1135041.00	√	CM34D25NZ9	219
M1135042.00	√	CM34D25NZ10	219
M1135043.00	√	CM34D25NZ11	219
M1135044.00	√	CM34D25NZ12	219
M1135045.00	√	CM34D25NZ13	219
M1135046.00	√	CM34D25NZ14	219
M1135053.00	√	CM34D25NZ30	219
M1135054.00	C/A	CM34D25NZ31	219
M1135055.00	√	CM34D25NZ32	219
M1135056.00	C/A	CM34D25NZ47	219
M1135057.00	C/A	CM34D25NZ48	219
M1135058.00	√	CM34D25NZ26	219
M1135059.00	√	CM34D25NZ27	219
M1135060.00	√	CM34D25NZ28	219
M1135061.00	C/A	CM34D25NZ29	219
M1135062.00	√	CM34D25NZ33	219
M1135063.00	√	CM34D25NZ34	219
M1135064.00	√	CM34D25NZ35	219
M1135065.00	√	CM34D25NZ36	219

Canada Catalogue Number Index

LEESON® Motors, Sub-FHP Gearmotors, Drives and Accessories

Catalogue No.	Availability	Model No.	Page No.
M1135066.00	√	CM34D25NZ37	219
M1135069.00	√	CM34D25NZ18	219
M1135106.00	√	CM34D25NZ62	215
M1135107.00	√	CM34D25NZ61	215
M1135108.00	√	CM34D25NZ53	215
M1135109.00	√	CM34D25NZ54	215
M1135110.00	√	CM34D25NZ55	215
M1135111.00	√	CM34D25NZ56	215
M1135112.00	√	CM34D25NZ58	215
M1135113.00	√	CM34D25NZ59	215
M1135114.00	√	CM34D25NZ57	215
M1135115.00	√	CM34D25NZ51	215
M1135116.00	√	CM34D25NZ60	215
M1135117.00	√	CM34D25NZ52	215
M1135139.00	C/A	CM34D25NZ71	215
M1135140.00	√	CM34D25NZ72	215
M1135141.00	√	CM34D25NZ73	215
M1135142.00	√	CM34D25NZ74	215
M1135143.00	√	CM34D25NZ75	215
M1135144.00	√	CM34D25NZ76	215
M1135145.00	√	CM34D25NZ77	215
M1135146.00	√	CM34D25NZ78	215
M1135147.00	√	CM34D25NZ79	215
M1135148.00	√	CM34D25NZ80	215
M1135149.00	√	CM34D25NZ81	215
M1135150.00	√	CM34D25NZ82	215
M1135243.00	√	CM34D25NZ154	215
M1135244.00	√	CM34D25NZ155	215
M1135245.00	√	CM34D25NZ156	215
M1135246.00	√	CM34D25NZ157	215
M1135249.00	C/A	CM34D25NZ158	219
M1135250.00	C/A	CM34D25NZ159	219
M1135251.00	√	CM34D25NZ160	219
M1135252.00	√	CM34D25NZ161	219
M1135284.00	C/A	CM34D17NZ28	221
M1135285.00	C/A	CM34D17NZ29	221
M1135286.00	√	CM34D17FZ3	221
M1135287.00	√	CM34D17FZ4	221
M1135288.00	C/A	CM34D17FZ5	221
M1135289.00	√	CM34D17FZ6	221
M1135290.00	√	CM34D17FZ7	221
M1135291.00	C/A	CM34D17NZ30	221
M1135292.00	√	CM34D17NZ31	221
M1135293.00	√	CM34D17NZ32	221
M1135294.00	C/A	CM34D17NZ33	221
M1135295.00	C/A	CM34D17NZ34	221
M1135296.00	C/A	CM34D17NZ35	221
M1135297.00	√	CM34D17NZ36	221
M1145023.00	√	CM38P17NZ20	231
M1145024.00	√	CM38P17NZ21	231
M1145025.00	C/A	CM38P17NZ22	231
M1145026.00	√	CM38P17NZ23	231
M1145027.00	√	CM38P17NZ24	231
M1145028.00	√	CM38P17NZ25	231
M1145029.00	√	CM38P17NZ26	231
M1145030.00	√	CM38P17FZ9	231

Catalogue No.	Availability	Model No.	Page No.
M1145031.00	√	CM38P17FZ10	231
M1145032.00	√	CM38P17FZ11	231
M1145033.00	√	CM38P17FZ12	231
M1145034.00	√	CM38P17FZ13	231
M1145035.00	√	CM38P17FZ14	231
M1145037.00	√	CM38P17FZ16	236
M1145038.00	√	CM38P17FZ17	236
M1145039.00	√	CM38P17FZ18	236
M1145040.00	√	CM38P17FZ19	236
M1145041.00	√	CM38P17FZ20	236
M1145082.00	C/A	CM38P17FZ23	236
M1145122.00	√	CM38T17FZ12	240
M1145123.00	√	CM38T17FZ14	240
M1145124.00	√	CM38T17FZ15	240
M1145125.00	√	CM38T17FZ16	240
M1145126.00	√	CM38T17FZ17	240
M1145127.00	√	CM38T17FZ7	241
M1145128.00	√	CM38T17FZ8	241
M1145129.00	√	CM38T17FZ9	241
M1145130.00	√	CM38T17FZ10	241
M1145131.00	√	CM38T17FZ11	241
M1145138.00	√	CM38P17FZ39	98, 231
M1145139.00	√	CM38P17FZ40	98, 231
M1145140.00	√	CM38P17FZ41	98, 231
M1145141.00	√	CM38P17FZ42	99, 237
M1145142.00	√	CM38P17FZ43	99, 237
M1145143.00	√	CM38P17FZ44	99, 237
M1145144.00	√	CM38T17FZ20	98, 231
M1145145.00	√	CM38T17FZ21	98, 231
M1145146.00	√	CM38T17FZ22	99, 237
M1145147.00	√	CM38T17FZ23	99, 237
M1740008.00	√	————	245
M1760000.00	√	————	238
M1760003.00	√	————	238
M1760006.00	√	————	238
M1760007.00	√	————	238
M1760011.00	√	————	238
M1760012.00	√	————	238
M1760021.00	√	————	238
M1760029.00	√	————	238
M1P00912	√	————	277
M1P00913	√	————	277
M1P01212	√	————	277
M1P01213	√	————	277
M1P01812	√	————	277
M1P01813	√	————	277
M1R00912	√	————	277
M1R00913	√	————	277
M1R01212	√	————	277
M1R01213	√	————	277
M1R01812	√	————	277
M1R01813	√	————	277
M25P03812	√	————	277
M25P03813	√	————	277
M25R03812	√	————	277
M25R03813	√	————	277

Catalogue No.	Availability	Model No.	Page No.
M2P02512	√	————	277
M2P02513	√	————	277
M2P02612	√	————	281
M2P02613	√	————	281
M2P03212	√	————	281
M2P03213	√	————	281
M2R02512	√	————	281
M2R02513	√	————	281
M2R02612	√	————	281
M2R02613	√	————	281
M2R03212	√	————	281
M2R03213	√	————	281
M3P05012	√	————	281
M3P05013	√	————	281
M3P06512	√	————	281
M3R05012	√	————	281
M3R05013	√	————	281
M3R06512	√	————	281
M900195.00	√	48S17D1301	142
M900196.00	√	48S17D1303	142
M900197.00	√	48S17D1302	142
M900277.00	√	56S17D7208	142
M900599.00	C/A	56S17D5710	142
MM23002D	√	————	245
MM23012D	√	————	245
MM23102D	√	————	244
MM23112D	√	————	244
MM23202D	√	————	244
MM23212D	√	————	244
MM23402D	√	————	244
MM23412D	√	————	244
MTU100-11.5	√	————	247
P099460.00	√	L4P11NZ96A	131
P099461.00	√	L4P11NZ95A	131
P099462.00	√	L4P11NZ94A	131
P099899.00	√	L4P17NB80A	131
P099900.00	√	L4P17NZ153A	131
P099901.00	√	L4P17NZ154A	131
P099909.00	√	L4P17NZ158A	131
P099910.00	√	A4P17NZ152A	131
P099911.00	√	L4P17NZ155A	131
PCM4	√	————	247
RG500A	√	————	245
RGA400-10	-	————	245
V1K110A00	-	————	274
V1K110A00EX	-	————	274
V1K110A01	-	————	275
V1K110A01EX	-	————	275
V1K12A00	-	————	274
V1K12A00EX	-	————	274
V1K12A01	-	————	275
V1K12A01EX	-	————	275
V1K130A00	-	————	274
V1K130A00EX	-	————	274
V1K130A01	-	————	275
V1K130A01EX	-	————	275

Canada Catalogue Number Index

LEESON® Motors, Sub-FHP Gearmotors, Drives and Accessories

Catalogue No.	Availability	Model No.	Page No.
V1K160A00	-	————	274
V1K160A00EX	-	————	274
V1K160A01	-	————	275
V1K160A01EX	-	————	275
V1K16A00	-	————	274
V1K16A00EX	-	————	274
V1K16A01	-	————	275
V1K16A01EX	-	————	275
V1K18A00	-	————	274
V1K18A00EX	-	————	274
V1K18A01	-	————	275
V1K18A01EX	-	————	275
V1K200A00	-	————	274
V1K200A00EX	-	————	274
V1K200A01	-	————	275
V1K200A01EX	-	————	275
V1K21A00	-	————	274
V1K21A00EX	-	————	274
V1K21A01	-	————	275
V1K21A01EX	-	————	275
V1K250A00	-	————	274
V1K250A00EX	-	————	274
V1K250A01	-	————	275
V1K250A01EX	-	————	275
V1K25A00	-	————	274
V1K25A00EX	-	————	274
V1K25A01	-	————	275
V1K25A01EX	-	————	275
V1K27A00	-	————	274
V1K27A00EX	-	————	274
V1K27A01	-	————	275
V1K27A01EX	-	————	275
V1K2A00	-	————	274
V1K2A00EX	-	————	274
V1K2A01	-	————	275
V1K2A01EX	-	————	275
V1K305A00	-	————	274
V1K305A00EX	-	————	274
V1K305A01	-	————	275
V1K305A01EX	-	————	275
V1K35A00	-	————	274
V1K35A00EX	-	————	274
V1K35A01	-	————	275
V1K35A01EX	-	————	275
V1K362A00	-	————	274
V1K362A00EX	-	————	274
V1K362A01	-	————	275
V1K362A01EX	-	————	275
V1K3A00	-	————	274
V1K3A00EX	-	————	274
V1K3A01	-	————	275
V1K3A01EX	-	————	275
V1K420A00	-	————	274
V1K420A00EX	-	————	274
V1K420A01	-	————	275

Catalogue No.	Availability	Model No.	Page No.
V1K420A01EX	-	————	275
V1K45A00	-	————	274
V1K45A00EX	-	————	274
V1K45A01	-	————	275
V1K45A01EX	-	————	275
V1K4A00	-	————	274
V1K4A00EX	-	————	274
V1K4A01	-	————	275
V1K4A01EX	-	————	275
V1K55A00	-	————	274
V1K55A00EX	-	————	274
V1K55A01	-	————	275
V1K55A01EX	-	————	275
V1K6A00	-	————	274
V1K6A00EX	-	————	274
V1K6A01	-	————	275
V1K6A01EX	-	————	275
V1K80A00	-	————	274
V1K80A00EX	-	————	274
V1K80A01	-	————	275
V1K80A01EX	-	————	275
V1K8A00	-	————	274
V1K8A00EX	-	————	274
V1K8A01	-	————	275
V1K8A01EX	-	————	275

D - Item to be discontinued once inventory is depleted.

C/A - Check availability.

► Model number is from stock item with a c-face installed.

MOTOR SELECTION

Electric motors are the workhorses of industry. Many applications exist where more than one motor can be used and/or the exact replacement is not available. Regal makes every effort to maximize interchangeability, mechanically and electrically, where compromise does not interfere with reliability and safety standards. If you are not certain of a replacement condition, contact any LEESON motors Authorized Distributor or the LEESON motors District Sales Office.

SELECTION

Identifying a motor for replacement purposes or specifying a motor for new applications can be done easily if the following information is known:

1. Nameplate Data
2. Motor Type
3. Electrical and Performance Characteristics
4. Mechanical Construction

NAMEPLATE DATA

Nameplate data is the most important first step in determining motor replacement. Much of the information needed can generally be obtained from the nameplate of the motor to be replaced. Take time to record all the nameplate information because it can save time, avoid confusion and MISAPPLICATION.

MOTOR TYPE

Alternating current (AC) induction motors are divided into two electrical categories, based on power source—single phase and polyphase (three phase). Direct current (DC) motors are used in applications where precise speed control is required or when battery or generated direct current is the available power source.

TYPICAL SPEED TORQUE CURVES

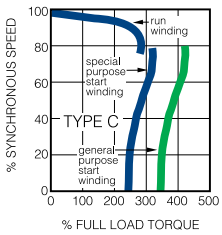

Capacitor Start/Induction Run

A single phase general purpose design, with an electrolytic capacitor in series with the start winding, offering maximum starting torque per ampere.

A centrifugal switch removes the auxiliary winding and capacitor when the motor approaches full load speed. The design is a heavy-duty unit which has approximately 300% (of full load) starting torque. Common applications include compressors, pumps, conveyors and other "hard-to-start" applications.

Capacitor Start/Capacitor Run

This design has two capacitors of different values. A centrifugal switch is used to remove the electrolytic capacitor when the motor approaches full load speed. A second run capacitor remains in series with the auxiliary winding during full load operation. This type of design has lower full-load amps as a result of the run capacitor and is consequently used on most higher horsepower single phase motors.

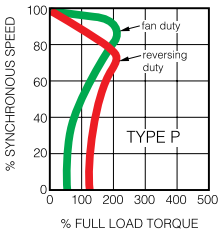

Permanent Split Capacitor (PSC)

This design has an auxiliary winding with a "run" capacitor, but unlike the capacitor start/induction run motor, the capacitor and auxiliary winding remain in the circuit under running conditions. (There is no centrifugal switch on this type motor.) A permanent split capacitor design has low starting torque and low starting current. They are generally used on direct-drive fans and blowers. They can also be designed for higher starting torque and intermittent applications, where rapid reversing is desired.

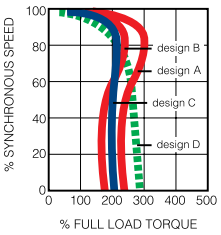

Three Phase or Polyphase

General purpose three phase motors have different electrical design classifications as defined by NEMA®. NEMA Design A and B motors are of normal starting torque with normal starting current. NEMA Design C motors have higher starting torque with normal starting current. All three types have slip of less than 5%. ("Slip" being a term which expresses, as a percentage, the difference between synchronous motor speed and full load motor speed, for example, 1800 rpm synchronous versus a full load speed of 1740 rpm.

NEMA's Design B and C standards are minimum performance standards. In practice, some manufacturers (including Regal) build small integral HP Design B motors with locked rotor and breakdown torque levels equalling NEMA Design C standards.

NEMA T frame motors 1 through 200 HP *covered* by EPAct (identified with a "G" catalogue prefix) are labeled Design B, exceed NEMA Design B performance levels, and have efficiencies equal to EPAct mandated levels. EPAct *exempt* three phase, base-mounted motors are labeled Design C and have performance characteristics meeting NEMA's Design C standards, with standard motor efficiencies. Motors 250 HP and larger are exempt from EPAct legislation.

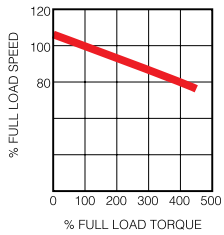

Permanent Magnet DC

This design has linear speed/torque characteristics over the entire speed range. SCR rated motor features include high starting torque for heavy load applications and dynamic braking, variable speed and reversing capabilities. Designs are also available for use on generated low voltage DC power or remote applications requiring battery power.

ELECTRICAL AND PERFORMANCE CHARACTERISTICS

One of the best ways to guarantee economical performance and long motor life is to make sure your motors operate at nameplate voltage. Applying too high a voltage may reduce the motor's efficiency and increase operating temperatures. The net result is shorter motor life.

Under-voltage can also shorten motor life. Operating on too low a voltage reduces the motor's effective horsepower. The motor will attempt to drive the load it was intended to drive, become overloaded, draw more current than normal, and overheat. Again, the result will be premature failure.

ENCLOSURES AND ENVIRONMENT

DRIP-PROOF: Venting in end frame and/or main frame located to prevent drops of liquid from falling into motor within a 15˚ angle from vertical. Designed for use in areas that are reasonably dry, clean, and well ventilated (usually indoors). If installed outdoors, it is recommended that the motor be protected with a cover that does not restrict the flow of air to the motor.

TOTALLY ENCLOSED AIR OVER (TEAO): Dust-tight fan and blower duty motors designed for shaft mounted fans or belt driven fans. The motor must be mounted within the airflow of the fan.

TOTALLY ENCLOSED NON-VENTILATED (TENV): No vent openings, tightly enclosed to prevent the free exchange of air, but not airtight. Has no external cooling fan and relies on convection for cooling. Suitable for use where exposed to dirt or dampness, but not for hazardous (explosive) locations.

TOTALLY ENCLOSED FAN COOLED (TEFC): Same as the TENV except has external fan as an integral part of the motor, to provide cooling by blowing air around the outside frame of the motor.

TOTALLY ENCLOSED, HOSTILE AND SEVERE ENVIRONMENT MOTORS: Designed for use in extremely moist or chemical environments, but not for hazardous locations.

TOTALLY ENCLOSED BLOWER COOLED MOTORS (TEBC): Used to extend the safe speed range of inverter-fed motors. Similar to TEFC except a small, constant-speed fan provides uniform airflow regardless of the drive motor's operating speed.

EXPLOSION-PROOF MOTORS: These motors meet Underwriters Laboratories and Canadian Standards Association standards for use in hazardous (explosive) locations, as indicated by the UL label affixed to the motor. Locations are considered hazardous because the atmosphere doesor may contain gas, vapor, or dust in explosive quantities.

NEMA is a trademark of National Electrical Manufacturers Association and is not owned or controlled by Regal Beloit Corporation.

Technical Information

NEMA® SERVICE FACTORS

HP	Enclosure	RPM		
		3600	1800	1200
1/4 -1/3	Open	1.35	1.35	1.35
1/2 - 3/4	Open	1.25	1.25	1.25
1 & Larger	Open	1.15	1.15	1.15
All	Totally Enclosed	1.00	1.00	1.00

Most LEESON® totally enclosed motors have 1.15 service factor. Refer to the service factor information on each page to identify specific totally enclosed motors with NEMA® 1.00 service factor. All drip-proof motors have NEMA service factors of 1.15 or higher. All three phase totally enclosed motors have NEMA service factors of 1.15 when noted.

SCR PM DC MOTORS ON PWM POWER SUPPLIES

Pulse width modulated DC controls have a voltage output similar to pure direct current which has a form factor of 1.00. SCR thyristor drives, such as the SPEEDMASTER® controls, have a form factor of 1.4.

LEESON® stock SCR rated motors can also be used with PWM controls. In fact, the motor's HP rating can be increased because of less heating in the motor. In addition, the motor will operate quieter and the brush life will be extended.

Rated HP 1.40 FF	Rated RPM	Rated Volts	Catalogue Number	Rated HP 1.05 FF
1/4	1750	90	098002	0.40
1/4	1750	180	098003	0.50
1/3	1750	90	098004	0.50
1/3	1750	90	108424	0.56
1/3	1750	180	098005	0.50
1/2	2500	90	098006	0.75
1/2	2500	180	098007	0.70
1/2	1750	90	098000	0.70
1/2	1750	90	108014	0.75
1/2	1750	90	108226	0.75
1/2	1750	180	098008	0.56
1/2	1750	180	108015	0.70
1/2	1750	180	108227	0.70
3/4	2500	90	098009	1.00
3/4	2500	90	108016	1.00
3/4	2500	180	098010	1.00
3/4	2500	180	108017	0.86
3/4	1750	90	098032	1.00
3/4	1750	90	108018	1.00
3/4	1750	90	108228	1.25
3/4	1750	180	098069	1.00
3/4	1750	180	108019	1.00
3/4	1750	180	108229	1.25
1	2500	90	108020	1.50
1	2500	180	108021	1.50
1	1750	90	108022	1.25
1	1750	90	108230	1.25
1	1750	180	108023	1.25
1	1750	180	108231	1.25
1 1/2	2500	180	108265	2.00
1 1/2	1750	180	108092	1.75
1 1/2	1750	180	108262	1.75
1 1/2	1750	180	108232	1.75
1 1/2	1750	180	128000	–
2	2500	180	108266	3.00
2	1750	180	128001	–
2	1750	180	128010	–
3	2500	180	128008	–
3	1750	180	108502	–

METRIC (IEC) DESIGNATIONS

The International Electrotechnical Commission (IEC) is a European-based organization that publishes and promotes worldwide mechanical and electrical standards for motors, among other things. In simple terms, it can be said that IEC is the international counterpart to the National Electrical Manufacturers Association (NEMA), which publishes the motor standards used in the United States.

IEC standards are expressed in metric units.

IEC ENCLOSURE PROTECTION INDEXES

Like NEMA, IEC has designations indicating the protection provided by a motor's enclosure. However, where NEMA® designations are word descriptive, such as open drip-proof or totally enclosed fan cooled, IEC uses a two-digit Index of Protection (IP) designation. The first digit indicates how well-protected the motor is against the entry of solid objects, the second digit refers to water entry.

By way of general comparison, an IP22 motor relates to open drip-proof, IP54 to totally enclosed.

Protection Against Solid Objects		Protection Against Liquids	
No.	Definition	No.	Definition
0	No protection	0	No protection
1	Protected against solid objects of over 50 mm (e.g. accidental hand contact)	1	Protected against water vertically dripping (condensation)
2	Protected against solid objects of over 12 mm (e.g. finger)	2	Protected against water dripping up to 15° from the vertical
3	Protected against solid objects of over 2.5 mm (e.g. tools, wire)	3	Protected against rain falling at up to 60° from the vertical
4	Protected against solid objects of over 1 mm (e.g. thin wire)	4	Protected against water splashes from all directions
5	Protected against dust	5	Protected against jets of water from all directions
6	Totally protected against dust	6	Protected against jets of water comparable to heavy seas
		7	Protected against the effects of immersion to depths of between 0.15 and 1m
		8	Protected against the effects of immersion of depths greater than 1 m

IEC DESIGN TYPES

The electrical performance characteristics of IEC Design N motors in general mirror those of NEMA Design B—the most common type of motor for industrial applications. By the same token, the characteristics of IEC Design H are nearly identical to those of NEMA Design C. There is no specific IEC equivalent to NEMA Design D.

MOTOR EFFICIENCY TEST METHODS

Performance data of single phase motors is determined by using I.E.E.E. Std. 114 (Method B), three phase motors by I.E.E.E. Std. 112 (Method B). Motor efficiency is calculated using CSA C390. These testing methods meet the requirements of EPAct of 1992 and most utility companies.

For complete performance data on all LEESON® motors, please review the Find-A-Product section on www.regalbeloit.com/BRANDS/LEESON.

NEMA is a trademark of National Electrical Manufacturers Association and is not owned or controlled by Regal Beloit Corporation.

UL Recognized Component Listing

Low voltage (< 600 V) motors in frames 48-449T listed in this catalogue (excludes REW, SREW, SEW, SSEW, MD and SE models) carry UL recognized component listing. Web: www.ul.com

NAFTA

A NAFTA (North American Free Trade Agreement) Certificate of Origin can be supplied on request.

Canadian Standards Association (CSA)

Low voltage (< 600 V) motors in frames 48-449T listed in this catalogue have Canadian Standards Association approval.

Web: www.csa-international.org

CE (Conformité Européene)

Regal offers a variety of CE-compliant LEESON® motors. Copies of the Declaration of Conformity for the Low Voltage Directive and Manufacturer's Declaration for the Machinery Directive are available on request.

Motors for Hazardous Locations

NEMA® definition of an **explosion-proof** motor: "a totally-enclosed machine designed and constructed to withstand an explosion of a specified gas or vapor which may occur within it and to prevent ignition of specified gas or vapor surrounding the machine by sparks, flashes or explosions of the specified gas or vapor which may occur within the machine casing."

Typical applications include petroleum and chemical plants or pipelines, gasoline pumps and natural gas compressors.

A **dust-ignition-proof** motor is "a totally enclosed machine whose enclosure is designed and constructed in a manner which will exclude ignitable amounts of dust or amounts which might affect performance or rating, and which will not permit arcs, sparks, or heat otherwise generated or liberated inside of the enclosure to cause ignition of exterior accumulations or atmospheric suspensions of a specific dust on or in the vicinity of the enclosure. Successful operation of this type of machine requires avoidance of overheating from such causes as excessive overloads, stalling, or accumulation of excessive quantities of dust on the machine."

Typical applications include grain elevators, coal handling equipment, feed and cereal mills, sugar refineries and chemical plants. Both types of motors are submitted to Underwriters Laboratories (UL) for approval.

The following is a brief description of the hazardous locations of both gaseous and dusty atmospheres as classified by the National Fire Protection Association's (NFPA) National Electrical Code (NEC) and printed from the 1996 Handbook. Consult the National Electrical Code for more information on explosion proof regulations.

Class 1 Group Classifications:

Class C - Atmospheres containing ethyl ether, ethylene, or gases or vapors of equivalent hazard.

Class D - Atmospheres such as acetone, ammonia, benzene, butane, cyclopropane, ethanol, gasoline, hexane, methanol, methane, natural gas, naphtha, propane,or gases or vapors of equivalent hazard.

Class 2 Group Classifications:

Group F - Atmospheres containing carbonaceous dusts, including carbon black, charcoal, coal or coke dusts that have more than 8% total entrapped volatiles, or dusts that have been sensitized by other materials so that they present an explosion hazard.

Group G - Atmospheres containing combustible dusts not included in Group E or F, including flour, grain, wood, plastic, and chemicals.

BAKING INDUSTRY SANITATION STANDARDS COMMITTEE

WASHGUARD® II, stainless steel washdown duty motors, NEMA® frames 56, 143T, 145T, 182T and 184T are certified to Standard No. 29 for electric motors and accessory equipment, authorization number 769.

SAUDI ARABIAN STANDARDS ORGANIZATION

SCCP Ref. No.: R-100157

U.S. DEPARTMENT OF ENERGY (DOE)

Compliance Certification (CC) number: CC005A

The CE Mark

CE is an acronym for the French phrase *"Conformite Europeene"* and is similar to the UL or CSA marks of North America. However, unlike UL or CSA which require independent laboratory testing, the CE mark can be applied by the motor manufacturer through "self certifying" that its products are designed to the appropriate standards. The European Union has issued 24 directives related to the **CE** mark. Three Directives apply to electric motors.

Low Voltage Directive (2006/95/EC) This directive applies to electrical equipment operating in the voltage range of 50-1000 volts AC or 75-1500 volts DC. Virtually all LEESON® motors (except low voltage DC) are included in this directive.

Based on our testing to the applicable electrical and mechanical standards EN60034 and IEC 34, LEESON motors certifies conformity to this directive. All three phase 50 Hz stock motors comply with the nameplate designations, lead markings and connection diagrams required. A "Declaration of Conformity" accompanies these motors and a CE label is applied.

Machinery Directive (89/3392/EEC) This directive applies to machinery that may contain certain motors. This is an issue with equipment manufacturers and requires the use of a motor meeting the Low Voltage Directive and requires a "Declaration of Incorporation" document which means that only the motor complies with the requirements of the Low Voltage Directive. A CE label is applied to the motor but it remains the responsibility of the equipment manufacturer to obtain certification for the finished product.

Electromagnetic Compatibility (EMC) Directive (2004/108/EC) This directive addresses the final product and is again a concern for the equipment manufacturer. Since this Directive addresses electromagnetic interference (EMI) concerns, it does not affect three phase AC motors because they do not produce EMI. DC motors, however, do produce EMI. How much of the "noise" is emitted outside the machine depends on a host of factors. LEESON® motors Engineering Department can assist OEM's in applying DC motors in machinery destined for Europe and requiring certification to the EMC Directive.

CE CONFORMITE EUROPEENE

NEMA is a trademark of National Electrical Manufacturers Association and is not owned or controlled by Regal Beloit Corporation.

Technical Information

Dimensions - AC Metric (IEC) Motors

B3 FOOT-MOUNTED

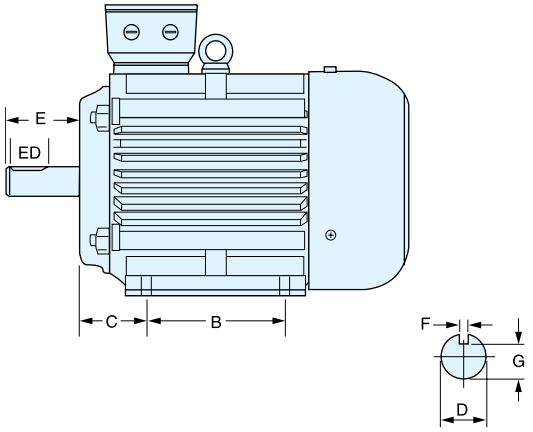

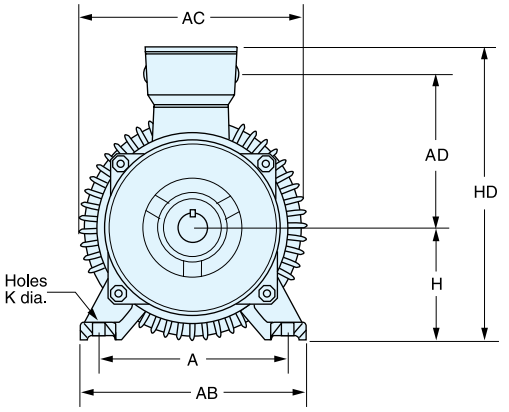

METRIC (IEC) FRAME DIMENSIONS (Millimeters)

Frame	Mounting						Shaft						General			B5 Flange						B14 Face					
	A	B	C	H	AB	K	D	E	F	G	ED	DH	AC	AD	HD	M	N	P	S	T	LA	M	N	P	S	T	LA
D56	90	71	36	56	107	6	9	20	3	7.5	8	M3 x 8	–	–	–	100	80	120	7	2.5	7	65	50	80	M5	2.5	7
D63	100	80	40	63	122	7	11	23	4	8.5	10	M4 x 10	126	84	171	115	95	140	10	3.0	7	75	60	90	M5	2.5	7
D71	112	90	45	71	136	7	14	30	5	11.0	20	M5 x 12.5	141	94	191	130	110	160	10	3.5	7	85	70	105	M6	2.5	9
D80	125	100	50	80	154	10	19	40	6	15.5	25	M6 x 16	159	102	206	165	130	200	12	3.5	12	100	80	120	M6	3.0	9
D90S	140	100	56	90	172	10	24	50	8	20.0	32	M8 x 19	180	112	229	165	130	200	12	3.5	12	115	95	140	M8	3.0	9
D90L	140	125	56	90	172	10	24	50	8	20.0	32	M8 x 19	180	112	229	165	130	200	12	3.5	12	115	95	140	M8	3.0	9
DF100L	160	140	63	100	205	12	28	60	8	24.0	40	M10 x 22	205	130	270	215	180	250	15	4.0	11	130	110	160	M8	3.5	14
DF112M	190	140	70	112	230	12	28	60	8	24.0	40	M10 x 22	240	150	300	215	180	250	15	4.0	12	130	110	160	M8	3.5	11
DF132S	216	140	89	132	270	12	38	80	10	33.0	56	M12 x 28	275	180	345	265	230	300	15	4.0	12	165	130	200	M10	3.5	14
DF132M	216	178	89	132	270	12	38	80	10	33.0	56	M12 x 28	275	180	345	265	230	300	15	4.0	12	165	130	200	M10	3.5	14
DF160M	254	210	108	160	320	15	42	110	12	37.0	80	M16 x 36	330	210	420	300	250	350	19	5.0	13	215	180	250	M12	4.0	13
DF160L	254	254	108	160	320	15	42	110	12	37.0	80	M16 x 36	330	210	420	300	250	350	19	5.0	13	215	180	250	M12	4.0	13
DF180M	279	241	121	180	355	15	48	110	14	42.5	80	M16 x 36	360	236	455	300	250	350	19	5.0	15	–	–	–	–	–	–
DF180L	279	279	121	180	355	15	48	110	14	42.5	80	M16 x 36	360	236	455	300	250	350	19	5.0	15	–	–	–	–	–	–
DF200L	318	305	133	200	395	19	55	110	16	49.0	100	M20 x 42	420	260	505	350	300	400	19	5.0	18	–	–	–	–	–	–
DF225S	356	286	149	225	435	19	55*/ 60	110*/ 140	16*/ 18	49*/ 53	100*/ 125	M20 x 42	450	275	580	400	350	450	19	5.0	18	–	–	–	–	–	–
DF225M	356	311	149	225	435	19	55*/ 60	110*/ 140	16*/ 18	49*/ 53	100*/ 125	M20 x 42	450	275	580	400	350	450	19	5.0	18	–	–	–	–	–	–
DF250M	406	349	168	250		24	60*/ 65	140*/ 140	18*/ 18	53*/ 58	125*/ 125	M20 x 42	508	300	625	–	–	–	–	–	–	–	–	–	–	–	–

* 2 Pole Dimensions
For overall length dimensions for our IEC motors, please refer to our IEC motor section of this catalogue.
Frames DF100L through DF132M, conduit box is located in the center of the frame.

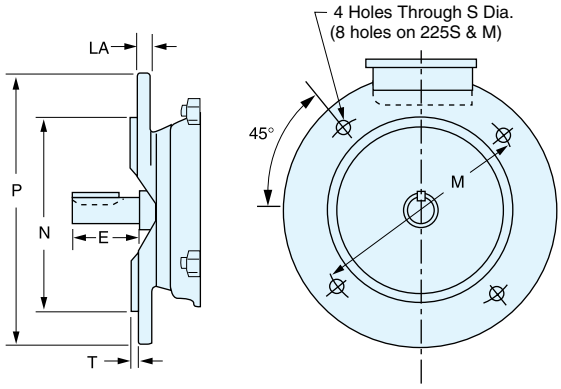

B5 FLANGE

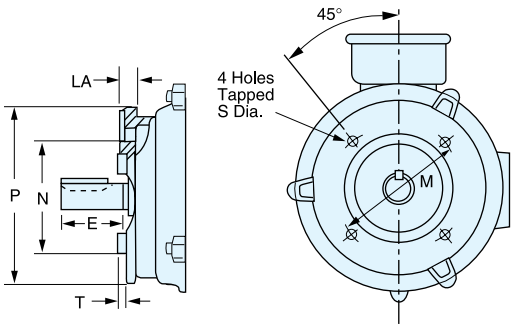

B14 FACE

TYPICAL CLOSE COUPLED PUMP MOTOR

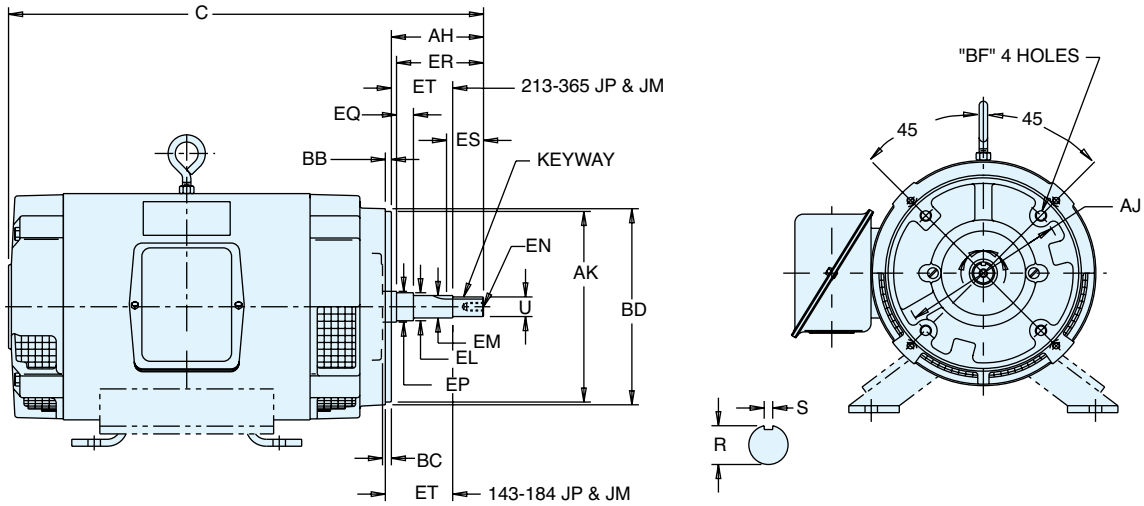

Dimensions for Type JM

Frame Desig.	U	AH	AJ	AK	BB	BD Max.	BF No.	BF Tap Size	BF Bolt Pen. Allow.	EL	EM	EN Tap Size	EN Tap Drill Depth Max.	EN Bolt Pen. Allow.	EP Min.	EQ	ER Min.	Keyseat R	Keyseat ES Min.	Keyseat S	ET
143 &	0.8745	4.15	5.890	4.500	0.150	6.62	4	3/8-16	0.56	1.156	1.0000	3/8-16	1.12	0.75	1.156	0.640	4.25	0.771	1.65	0.190	2.890
145JM	0.8740	4.10	5.860	4.497	0.10					1.154	0.9995					0.610		0.756		0.188	2.860
182 &	0.8745	4.13	5.89	4.500	0.16	6.62	4	3/8-16	0.56	1.250	1.0000	3/8-16	1.12	0.75	1.250	0.640	4.25	0.771	1.65	0.190	2.890
184JM	0.8740	4.09	5.86	4.497	0.125					1.248	0.9995					0.610		0.756		0.188	2.860
213 &	0.8750	4.25	7.265	8.500	0.312	9.00	4	1/2-13	0.75	1.250	1.0000	3/8-16	1.12	0.75	1.750	0.640	4.25	0.771	1.65	0.190	2.890
215JM	0.8745		7.235	8.497	0.250					1.248	0.9995					0.610		0.756		0.188	2.860
254 &	1.2495	5.25	7.250	8.500	0.312	10.00	4	1/2-13	0.75	1.750	1.3750	1/2-13	1.50	1.00	1.750	0.640	5.25	1.112	2.53	0.252	3.015
256JM	1.2490			8.497	0.250					1.748	1.3745					0.610		1.097		0.250	2.985
284 &	1.2495	5.281	11.00	12.500	0.312	14.00	4	5/8-11	0.94	1.750	1.3750	1/2-13	1.50	1.00	2.125	0.645	5.25	1.112	2.53	0.252	3.020
286JM	1.2490	5.219		12.495	0.250					1.748	1.3745					0.605		1.097		0.250	2.980
324 &	1.2495	5.281	11.00	12.500	0.312	14.00	4	5/8-11	0.94	1.750	1,3750	1/2-13	1.50	1.00	2.125	0.645	5.25	1.112	2.53	0.252	3.020
326JM	1.2490	5.219		12.495	0.250					1.478	1.3745					0.605		1.097		0.250	2.980

Dimensions for Type JP

Frame Desig.	U	AH	AJ	AK	BB	BD Max.	BF No.	BF Tap Size	BF Bolt Pen. Allow.	EL	EM	EN Tap Size	EN Tap Drill Depth Max.	EN Bolt Pen. Allow.	EP Min.	EQ	ER Min.	Keyseat R	Keyseat ES Min.	Keyseat S	ET
143 &	0.8745	7.19	5.890	4.500	0.156	6.62	4	3/8-16	0.56	1.156	1.0000	3/8-16	1.12	0.75	1.156	1.578	7.312	0.771	1.65	0.190	5.952
145JP	0.8740	7.15	5.860	4.497	0.125					1.154	0.9995					1.548		0.756	1.65	0.188	5.922
182 &	0.8745	7.21	5.890	4.500	0.156	6.62	4	3/8-16	0.56	1.250	1.0000	3/8-16	1.12	0.75	1.250	1.578	7.312	0.771	1.65	0.190	5.952
184JP	0.8740	7.15	5.860	4.497	0.100					1.248	0.9995					1.548		0.756		0.188	5.922
213 &	1.2495	8.12	7.250	8.500	0.312	9.00	4	1/2-13	0.75	1.750	1.3750	1/2-13	1.50	1.00	1.750	2.390	8.125	1.112	2.53	0.252	5.890
215JP	1.2490			8.497	0.250					1.748	1.3745					2.360		1.097		0.250	5.860
254 &	1.2495	8.156	7.250	8.500	0.312	10.00	4	1/2-13	0.75	1.750	1.3750	1/2-13	1.50	1.00	1.750	2.390	8.125	1.112	2.53	0.252	5.890
256JP	1.2490	8.094		8.497	0.250					1.748	1.3745					2.360		1.097		0.250	5.855
284 &	1.2495	8.156	11.00	12.500	0.312	14.00	4	5/8-11	0.94	1.750	1.3750	1/2-13	1.50	1.00	2.125	2.390	8.125	1.112	2.53	0.252	5.895
286JP	1.2490	8.094		12.495	0.250					1.748	1.3745					2.360		1.097		0.250	5.860
324JP &	1.2495	8.12	11.00	12.500	0.312	14.00	4	5/8-11	0.94	1.750	1.3750	1/2-13	1.50	1.00	2.125	2.395	8.125	1.112	2.53	0.252	5.895
326JP	1.2490			12.495	0.250					1.748	1.3745					2.355		1.097		0.250	5.855
364JP &	1.6245	8.12	11.00	12.500	0.312	14.00	4	5/8-11	0.94	2.125	1.7500	1/2-13	1.50	1.00	2.500	2.395	8.125	1.416	2.53	0.377	5.895
365JP	1.6240			12.495	0.250					2.13	1.7495					2.355		1.401		0.375	5.855

All dimensions are measured in inches. For "C" dimensions, refer to the appropriate catalogue page. Certified drawings are available upon request - contact Regal for details.

Technical Information

Dimensions - Speedmaster® Inverter Duty Motors

TENV—C FACE, RIGID BASE

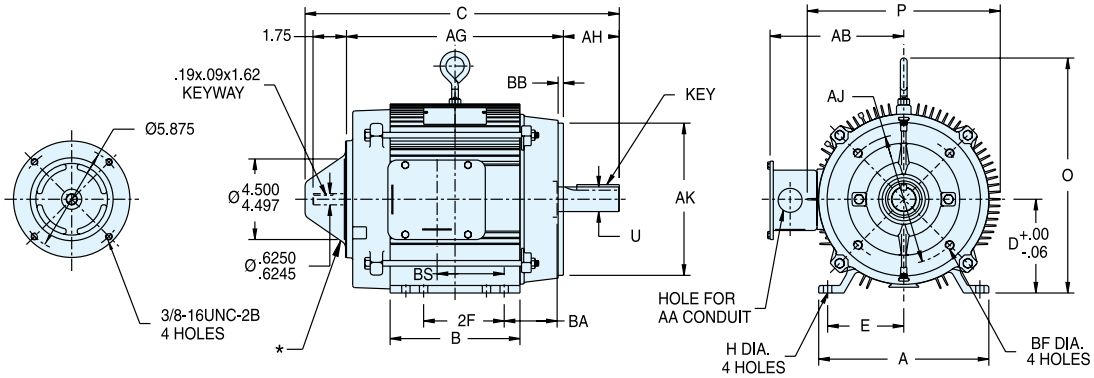

TENV • C FACE • RIGID BASE • DIMENSIONS (Inches)

Frame Size	D	E	2F	H	O MAX.	P MAX.	U	AA	AB MAX.	AG MAX.	AH	AJ	AK	BA	BB	BF	BS	KEY
143TC	3.50	2.75	4.00	.38	7.45	7.98	.875	1.09	7.04	9.25	2.12	5.875	4.50	2.62	.13	3/8-16	2.81	.19 x .19 x 1.38
145TC	3.50	2.75	5.00	.35	7.45	7.98	.875	1.09	7.04	10.25	2.12	5.875	4.50	2.62	.13	3/8-16	3.81	.19 x .19 x 1.38
182TC	4.50	3.75	4.50	.41	9.36	9.76	1.125	1.09	8.08	11.75	2.62	7.250	8.50	3.50	.27	1/2-13	2.25	.25 x .25 x 1.75
184TC	4.50	3.75	5.50	.41	9.36	9.76	1.125	1.09	8.08	12.75	2.62	7.250	8.50	3.50	.27	1/2-13	2.75	.25 x .25 x 1.75
213TC	5.25	4.25	5.50	.44	10.97	11.50	1.375	1.09	9.31	15.12	3.12	7.250	8.50	4.25	.27	1/2-13	3.50	.31 x .31 x 2.38
215TC	5.25	4.25	7.00	.44	10.97	11.50	1.375	1.09	9.31	17.31	3.12	7.250	8.50	4.25	.27	1/2-13	6.18	.31 x .31 x 2.38
254TC	6.25	5.00	8.25	.53	14.09	14.27	1.625	1.25	9.83	19.06	3.75	7.250	8.50	4.75	.27	1/2-13	6.31	.38 x .38 x 2.88
256TC	6.25	5.00	10.00	.56	14.09	14.27	1.625	1.25	11.08	18.82	3.75	7.250	8.50	4.75	.27	1/2-13	5.00	.38 x .38 x 2.88
284TC	7.00	5.50	9.50	.56	14.16	14.32	1.875	1.50	12.31	20.57	4.38	9.000	10.50	4.75	.27	1/2-13	5.50	.50 x .50 x 3.25

TEBC—TOTALLY ENCLOSED BLOWER COOLED, RIGID BASE

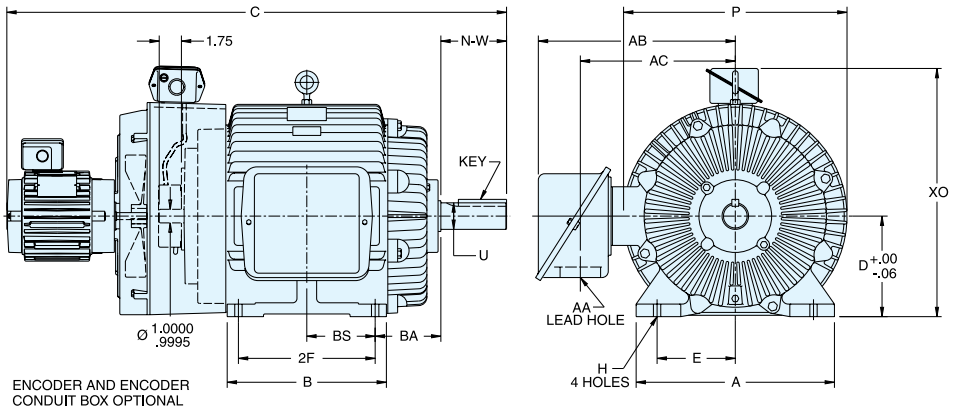

TEBC • TOTALLY ENCLOSED BLOWER COOLED • RIGID BASE • DIMENSIONS (Inches)

Frame Size	D	E	2F	H	O MAX.	P MAX.	U	AA	AB MAX.	AC MAX.	BA	BS	FU	N-W	KEY
325T	8.00	6.25	10.50	.66	16.00	15.88	2.12	2.00	13.69	10.69	5.25	5.25	1.00	5.25	.50 x .50 x 3.88
326T	8.00	6.25	12.00	.66	16.00	15.88	2.12	2.00	13.69	10.69	5.25	6.00	1.00	5.25	.50 x .50 x 3.88
364T	9.00	7.00	11.25	.66	19.00	20.00	2.38	3.62	17.85	14.56	5.88	5.62	1.00	5.88	.62 x .62 x 4.25
365T	9.00	7.00	12.25	.66	19.00	20.00	2.38	3.62	17.85	14.56	5.88	6.12	1.00	5.88	.62 x .62 x 4.25
404T	10.00	8.00	12.25	.81	20.88	21.75	2.88	3.62	18.75	14.75	6.62	6.12	1.00	7.25	.75 x .75 x 5.62
405T	10.00	8.00	13.75	.81	20.88	21.75	2.88	3.62	19.75	16.25	6.62	6.88	1.00	7.25	.75 x .75 x 5.62
444T	11.00	9.00	14.50	.81	24.19	25.31	3.38	3.62	20.94	17.38	7.50	7.25	1.00	8.50	.88 x .88 x 6.88
445T	11.00	9.00	16.50	.81	24.19	26.31	3.38	3.62	20.94	17.38	7.50	8.25	1.00	8.50	.88 x .88 x 6.88
449T	11.00	9.00	25.00	.81	24.22	26.31	3.38	4.62	25.90	19.31	7.50	1.78	1.00	8.50	.88 x .88 x 6.88

Technical Information

Dimensions - NEMA® Steel Frame Motors

RIGID MOUNT

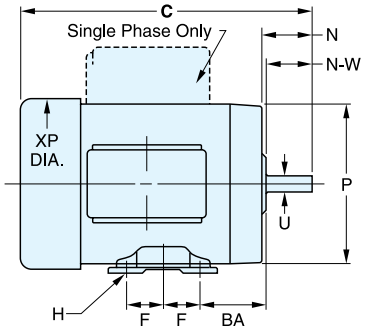

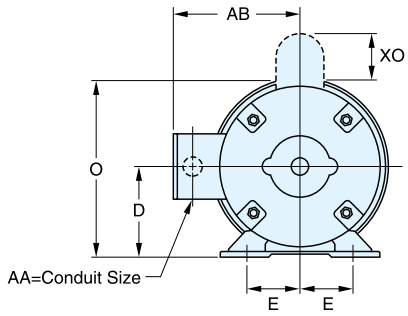

The condensed dimensions shown on these pages are for general reference only and are not for construction. The overall length or "C" dimension for each catalogue item is included in this catalogue. Certified drawings of all ratings are available for construction purposes.

C FACE

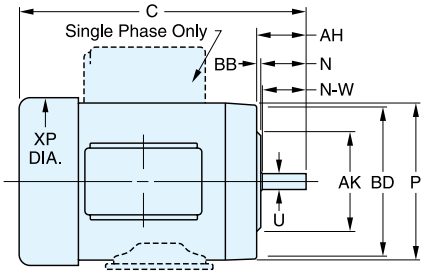

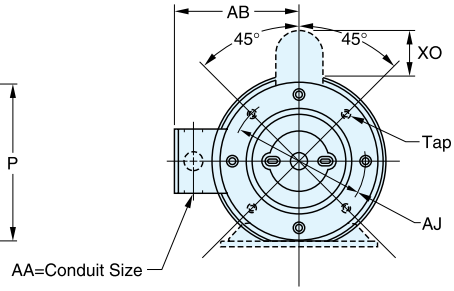

NEMA SHAFT AND KEYWAY DIMENSIONS ■ (Inches)

NEMA® SHAFT (U)	KEYWAY DIMENSIONS (R)	(S)	NEMA® SHAFT (U)	KEYWAY DIMENSIONS (R)	(S)
3/8	21/64	FLAT	1-7/8	1-19/32	1/2
1/2	29/64	FLAT	2-1/8	1-27/32	1/2
5/8	33/64	3/16	2-3/8	2-1/64	5/8
7/8	49/64	3/16	2-1/2	2-3/16	5/8
1-1/8	63/64	1/4	2-7/8	2-29/64	3/4
1-3/8	1-13/64	5/16	3-3/8	2-7/8	7/8
1-5/8	1-13/32	3/8	3-7/8	3-5/16	1

■ S is keyway width.
U minus R is keyway depth.

NEMA STEEL FRAME DIMENSIONS (Inches)

Frame Size ▲	D	E	F	H	N	O	P	U	N-W	AA	AB	AH	AJ	AK	BA	BB	BD	XO	XP	TAP **	KEY
42	2 5/8	1 3/4	27/32	9/32 Slot	1 3/16	5 1/16	4 7/8	3/8	1 1/8	3/8	4 1/2	1 5/16	3 3/4	3	2 1/16	1/8	4 7/8	1 5/8	5 1/8	1/4-20	3/64 Flat
48	3	2 1/8	1 3/8	11/32 Slot	1 9/16	5 13/16	5 19/32	1/2	1 1/2	1/2	4 7/8	1 11/16	3 3/4	3	2 1/2	1/8	5	2 1/4	5 7/8	1/4-20	3/64 Flat
S56	3 1/2	2 7/16	1 1/2	11/32 Slot	1 15/16	6 5/16	5 19/32	5/8	1 7/8	1/2	4 7/8	2 1/16	5 7/8	4 1/2	2 3/4	1/8	6 1/2	2 1/4	5 7/8	3/8-16	3/16
56						6 13/16	6 19/32				5 5/16								7 5/32		
143T	3 1/2	2 3/4	2	11/32	2 3/8	6 13/16	6 19/32	7/8	2 1/4	3/4	5 5/16	2 1/8	5 7/8	4 1/2	*2 1/4	1/8	6 1/2	2 1/4	7 5/32	3/8-16	3/16
145T			2 1/2																		
182T	4 1/2	3 3/4	2 1/4	13/32	2 7/8	8 3/4	8 15/32	1 1/8	2 3/4	3/4	6 7/16	2 5/8	7 1/4	8 1/2	*2 3/4	1/4	8 7/8	2 1/4	9 7/32	1/2-13	1/4
184T			2 3/4																		
S213T	5 1/4	4 1/4	2 3/4	13/32	3 1/2	9 27/32	8 13/32	1 3/8	3 3/8	3/4	7 19/32	3 1/8	7 1/4	8 1/2	*3 1/2	1/4	8 7/8	2 1/4	9 7/32	1/2-13	5/16
213T			2 3/4		—	10 5/8	9 21/32										8 5/8		10 13/16		
215T			3 1/2																		

* 143-5TC NEMA C face BA dimension is 2¾". 182-4TC NEMA C face BA dimension is 3½". 213-5TC NEMA C face BA dimension is 4¼".
** 326TC and smaller have 4 mounting holes in NEMA C face, 364TC and larger have 8 mounting holes.
▲ Blue shading denotes dimensions established by NEMA standard MG1, others are unique to LEESON® motors, and will vary with each manufacturer.

Pedestal Fan Motors

Note: Motors with U = .625 have a 3/16" keyway.

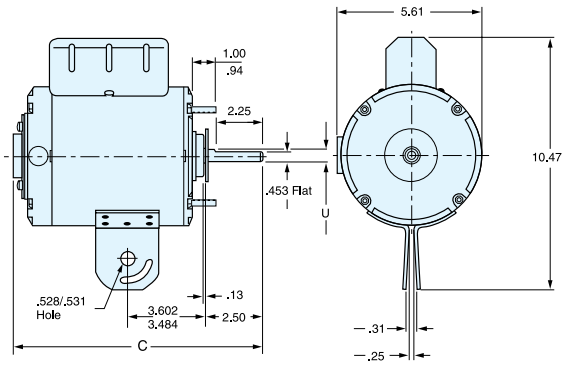

NEMA is a trademark of National Electrical Manufacturers Association and is not owned or controlled by Regal Beloit Corporation.

Technical Information

Dimensions - NEMA® Steel Frame Motors

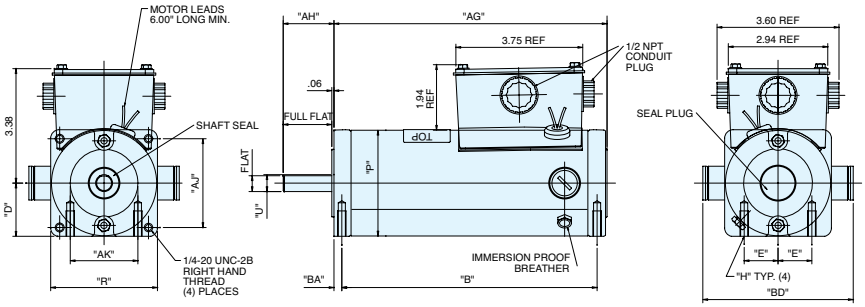

WASHGUARD® 31 FRAME SQUARE FLANGE MOUNT STYLE MOTOR DIMENSIONS (Inches)

Catalogue Number	Frame	AG	P	BD	U	AH	AH-BB	AJ	Tap	R	AK	BB	D	BA	E	F	H
M1120181	31S	7.07	3.13	3.80	.50000	1.5	1.44	2.63	1/4-20	3.16	1.99	.07	1.57	.235	1.000	6.55	1/4-20
M1120182	31S	6.57	3.13	4.45	.50000	1.5	1.44	2.63	1/4-20	3.16	1.99	.07	1.57	.235	1.000	6.05	1/4-20
M1120183	31S	8.57	3.13	3.80	.50000	1.5	1.44	2.63	1/4-20	3.16	1.99	.07	1.57	.235	1.000	8.05	1/4-20
M1120184	31S	8.07	3.13	4.45	.50000	1.5	1.44	2.63	1/4-20	3.16	1.99	.07	1.57	.235	1.000	7.55	1/4-20

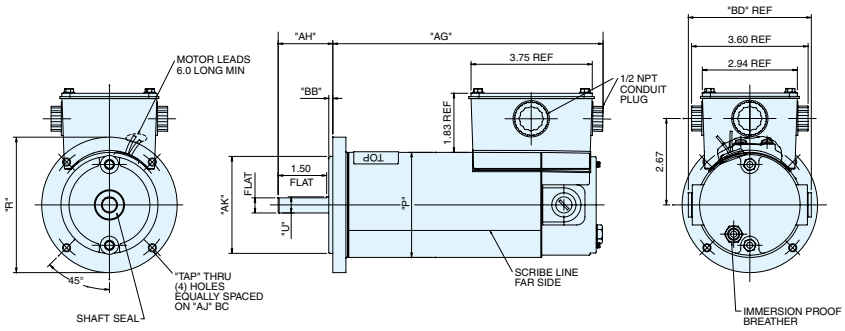

WASHGUARD 42C FACE MOUNT STYLE MOTOR DIMENSIONS (Inches)

Catalogue Number	Frame	AG	P	U	AH	AH-BB	KEY	AJ	TAP	AK	R	BD
M1120185	32F42CZ	8.36	3.25	.500	1.69	1.50	.13 SQ	3.750	1/4-20	3.00	4.19	3.80
M1120186	32F42CZ	7.86	3.25	.500	1.69	1.50	.13 SQ	3.750	1/4-20	3.00	4.19	4.43

ALL DIMENSIONS IN INCHES

NEMA is a trademark of National Electrical Manufacturers Association
and is not owned or controlled by Regal Beloit Corporation.

Commercial Duty Metric (IEC) Frame Motors

DIMENSIONS (Inches)

Frame	Voltage	AG	P	U	AH	N-W	AJ	TAP	AK	BB
	12	4.59	2.50	.35	.787	.591	2.56	M5x.8	1.97	.10
2.50	24	4.59	2.50	.35	.787	.591	2.56	M5x.8	1.97	.10
	90	4.59	2.50	.35	.787	.591	2.56	M5x.8	1.97	.10
	12	5.53	3.00	.35	.787	.591	2.56	M5x.8	1.97	.10
3.00	24	5.53	3.00	.35	.787	.591	2.56	M5x.8	1.97	.10
	90	5.53	3.13	.35	.787	.591	2.56	M5x.8	1.97	.10
	12	5.87	3.00	.35	.787	.591	2.56	M5x.8	1.97	.10
3.00	24	5.87	3.00	.35	.787	.591	2.56	M5x.8	1.97	.10
	90	5.87	3.13	.35	.787	.591	2.56	M5x.8	1.97	.10

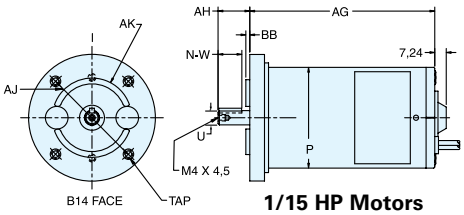

1/15 HP Motors

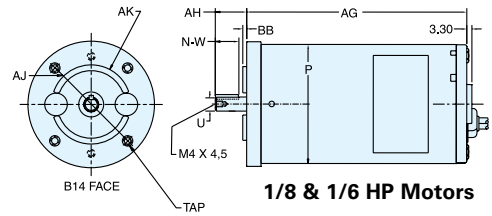

1/8 & 1/6 HP Motors

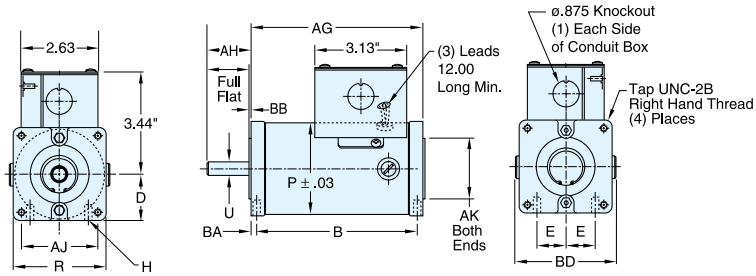

Note: Optional conduit box not included on 25 frame models.

Conduit box dimensions shown here are for 31 frame only.

25 & 31 FRAME SQUARE FLANGE MOUNT DIMENSIONS (Inches)

Frame & Type		AG	P	BD	U	AH	AH-BB	AJ	TAP	R	AK	BB	D	BA	E	B	H
25	**AS**	4.08	2.50	3.00	.312	1.5	1.00	1.73	8-32	2.62	.997	.03	1.28	.125	.625	3.83	8-32
	CS	4.94	2.50	3.00	.312	1.5	1.00	1.73	8-32	2.62	.997	.03	1.28	.125	.625	4.69	8-32
31	**BS**	5.39	3.07	3.45	.5000	1.5	1.00	2.63	¼-20	3.16	1.99	.07	1.57	.235	1.000	4.92	¼-20
	CS**	5.89	3.07	3.45	.5000	1.5	1.00	2.63	¼-20	3.16	1.99	.07	1.57	.235	1.000	5.42	¼-20
	ES**	6.89	3.07	3.45	.5000	1.5	1.00	2.63	¼-20	3.16	1.99	.07	1.57	.235	1.000	6.42	¼-20
	GS	7.89	3.07	3.45	.5000	1.5	1.00	2.63	¼-20	3.16	1.99	.07	1.57	.235	1.000	7.42	¼-20

**Catalogue numbers M1120041 & M1120044 have an 'AG' & 'F' dimension that is .5" longer than stated in table.

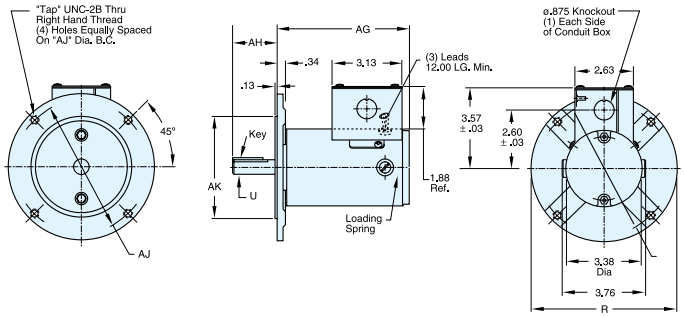

42C FACE MOUNT DIMENSIONS (Inches)

Frame	AG	P	U	AH	AH-BB	KEY	AJ	TAP	AK	R
34D42C	6.43	3.38	.500	1.38	1.25	.13 SQ	3.750	¼-20	3.00	4.25

56C FACE MOUNT DIMENSIONS (Inches)

Frame	AG	P*	U	AH	AH-BB	KEY	AJ	TAP	AK	R
34E56C	6.87	3.38	.625	2.06	1.93	.19 SQ	5.875	⅜-16	4.50	6.50
34G56C	8.59	3.38	.625	2.06	1.93	.19 SQ	5.875	⅜-16	4.50	6.50

*For 1/4 HP 34 frame TEFC designs. Fan cover diameter is 3.88".

Technical Information

5000 Frame Motors

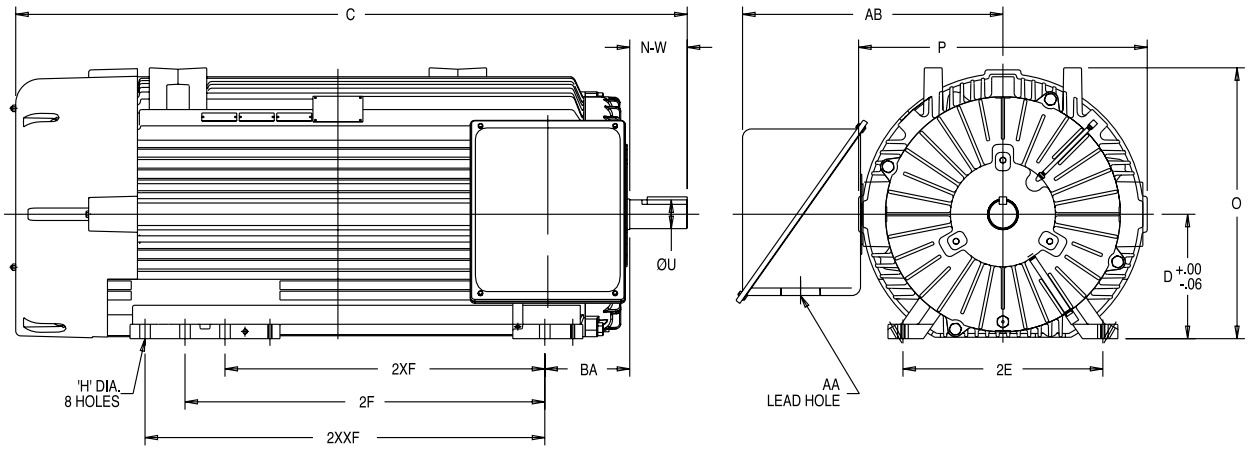

FRAME	H	BA	2XF	2F	2XXF	N-W	U	AB (MAX.)	P (MAX.)	O (MAX.)	D	2E	AA
5010LS	1.062 1.077	8.50	32.00	—	—	5.75	2.875 2.874	26.05	28.88	27.08	12.470 12.410	20.00	4.00 NPT
5011LS	1.062 1.077	8.50	—	36.00	—	5.75	2.875 2.874	26.05	28.88	27.08	12.470 12.410	20.00	4.00 NPT
5012LS	1.062 1.077	8.50	—	—	40.00	5.75	2.875 2.874	26.05	28.88	27.08	12.470 12.410	20.00	4.00 NPT
5013LS	1.062 1.077	8.50	45.00	—	—	5.75	2.875 2.874	26.05	28.88	27.08	12.470 12.410	20.00	4.00 NPT
5010LX	1.062 1.077	8.50	32.00	—	—	12.00	3.875 3.874	26.05	28.88	27.08	12.470 12.410	20.00	4.00 NPT
5011LX	1.062 1.077	8.50	—	36.00	—	12.00	3.875 3.874	26.05	28.88	27.08	12.470 12.410	20.00	4.00 NPT
5012LX	1.062 1.077	8.50	—	—	40.00	12.00	3.875 3.874	26.05	28.88	27.08	12.470 12.410	20.00	4.00 NPT
5013LX	1.062 1.077	8.50	45.00	—	—	12.00	3.875 3.874	26.05	28.88	27.08	12.470 12.410	20.00	4.00 NPT
5010L	1.062 1.077	8.50	32.00	—	—	9.50	4.000 3.999	26.05	28.88	27.08	12.470 12.410	20.00	4.00 NPT
5011L	1.062 1.077	8.50	—	36.00	—	9.50	4.000 3.999	26.05	28.88	27.08	12.470 12.410	20.00	4.00 NPT
5012L	1.062 1.077	8.50	—	—	40.00	9.50	4.000 3.999	26.05	28.88	27.08	12.470 12.410	20.00	4.00 NPT
5013L	1.062 1.077	8.50	45.00	—	—	9.50	4.000 3.999	26.05	28.88	27.08	12.470 12.410	20.00	4.00 NPT
5010S	1.062 1.077	8.50	32.00	—	—	5.75	2.625 2.624	26.05	28.88	27.08	12.470 12.410	20.00	4.00 NPT
5011S	1.062 1.077	8.50	—	36.00	—	5.75	2.625 2.624	26.05	28.88	27.08	12.470 12.410	20.00	4.00 NPT
5012S	1.062 1.077	8.50	—	—	40.00	5.75	2.625 2.624	26.05	28.88	27.08	12.470 12.410	20.00	4.00 NPT
5013S	1.062 1.077	8.50	45.00	—	—	5.75	2.625 2.624	26.05	28.88	27.08	12.470 12.410	20.00	4.00 NPT

All dimensions are measured in inches. For "C" dimensions, refer to the appropriate catalogue page.
Certified drawings are available upon request - contact Regal for details.

NEMA® MG-1 Table 12-12 Full Load Efficiencies for 60 Hz NEMA Premium® (CEE)

Efficient Electric Motors Rated 600 Volts or less (Random Wound)

NEMA® MG-1 Table 12-12 Full Load Efficiencies for 60 Hz NEMA Premium® (CEE)								
Efficient Electric Motors Rated 600 Volts or less (Random Wound)								
HP	NOMINAL FULL LOAD EFFICIENCY							
	OPEN FRAME				ENCLOSED FRAME			
	2 POLE	4 POLE	6 POLE	8 POLE	2 POLE	4 POLE	6 POLE	8 POLE
1	77.0	85.5	82.5	75.5	77.0	85.5	82.5	75.5
1 1/2	84.0	86.5	86.5	77.0	84.0	86.5	87.5	78.5
2	85.5	86.5	87.5	86.5	85.5	86.5	88.5	84.0
3	85.5	89.5	88.5	87.5	86.5	89.5	89.5	85.5
5	86.5	89.5	89.5	88.5	88.5	89.5	89.5	86.5
7 1/2	88.5	91.0	90.2	89.5	89.5	91.7	91.0	86.5
10	89.5	91.7	91.7	90.2	90.2	91.7	91.0	89.5
15	90.2	93.0	91.7	90.2	91.0	92.4	91.7	89.5
20	91.0	93.0	92.4	91.0	91.0	93.0	91.7	90.2
25	91.7	93.6	93.0	91.0	91.7	93.6	93.0	90.2
30	91.7	94.1	93.6	91.7	91.7	93.6	93.0	91.7
40	92.4	94.1	94.1	91.7	92.4	94.1	94.1	91.7
50	93.0	94.5	94.1	92.4	93.0	94.5	94.1	92.4
60	93.6	95.0	94.5	93.0	93.6	95.0	94.5	92.4
75	93.6	95.0	94.5	94.1	93.6	95.4	94.5	93.6
100	93.6	95.4	95.0	94.1	94.1	95.4	95.0	93.6
125	94.1	95.4	95.0	94.1	95.0	95.4	95.0	94.1
150	94.1	95.8	95.4	94.1	95.0	95.8	95.8	94.1
200	95.0	95.8	95.4	94.1	95.4	96.2	95.8	94.5
250	95.0	95.8	95.8	95.0	95.8	96.2	95.8	95.0
300	95.4	95.8	95.8	95.0	95.8	96.2	95.8	95.0
350	95.4	95.8	95.8	95.0	95.8	96.2	95.8	95.0
400	95.8	95.8	95.8	95.0	95.8	96.2	95.8	95.0
450	96.2	96.2	96.2	95.0	95.8	96.2	95.8	95.0
500	96.2	96.2	96.2	95.0	95.8	96.2	95.8	95.0

NEMA and NEMA Premium are trademarks of National Electrical Manufacturers Association and are not owned or controlled by Regal Beloit Corporation.

Warnings and Cautions

Electrical

SAFETY

Safety is emphasized throughout this catalogue. These are safety alert symbols and signal words. They alert the user to potential personal injury hazards. Obey all safety messages to avoid possible injury or death or damage to equipment and other property.

⚠ WARNING WARNING indicates a hazardous situation which, if not avoided, could result in death or serious injury.

⚠ CAUTION CAUTION indicates a hazardous situation which, if not avoided, could result in minor or moderate injury.

IMPORTANT INFORMATION PLEASE READ CAREFULLY

This catalogue is not intended to provide operational instructions. Appropriate instructions provided with the motor and precautions attached to the motor should be read carefully prior to installation, operation and/or maintenance of the equipment. Injury to personnel or motor failure may be caused by improper installation, maintenance or operation.

The following **WARNING** and **CAUTION** information is supplied to you for your protection and to provide you with many years of trouble free and safe operation of your Regal product:

⚠ WARNING

Indicates a hazardous situation which, if not avoided, could result in death or serious injury. Failure to follow the steps listed below could result in damage to equipment or personal injury.

- Disconnect power and lock out driven equipment before working on a motor.
- Keep hands and clothing away from moving parts.
- The lifting support on the motor is not to be used to lift the entire machine. Only the motor attached directly to the support may be safely lifted by the support.
- Install and ground per local and National electrical codes.
- Discharge all capacitors before servicing a single phase motor.
- Misapplication of a motor in hazardous environments can cause fire or an explosion and result in serious injury. Only the end user, local authority having jurisdiction, and/or insurance underwriter are qualified to identify the appropriate class(es), group(s), division(s), and temperature code(s) that applies(y) in a hazardous environment. Regal personnel cannot evaluate or recommend what motors may be suitable for use in hazardous environments. If a motor is name plated for hazardous locations, do not operate the motor without all of the grease and drain plugs installed.
- Never attempt to measure the temperature rise of a motor by touch. Temperature rise must be measured by a thermometer, resistance, imbedded detector or thermocouple.
- Motors with automatic reset thermal protectors will automatically restart when the protector temperature drops sufficiently. Do not use motors with automatic reset thermal protectors in applications where automatic restart will be hazardous to personnel or equipment.
- Motors with manual reset thermal protectors may start unexpectedly after the protector trips when the surrounding air is at +20˚ Fahrenheit or lower. If the manual reset protector trips, disconnect motor from its power supply. After the protector cools (five minutes or more), it can be reset and power may be applied to the motor.
- Connect all protective device leads, marked P1, P2, etc., per instructions supplied with the motor.
- Operation of a motor at other than its nameplate rating may result in fire, damage to equipment or serious injury to personnel.
- For safety, buyer or user should provide protective guards over all shaft extensions and any moving apparatus mounted thereon. The user is responsible for checking all applicable safety codes in his area and providing suitable guards. Failure to do so may result in bodily injury and/or damage to equipment.

Continued On Next Page

IMPORTANT INFORMATION CONTINUED PLEASE READ CAREFULLY

⚠ CAUTION

Indicates a hazardous situation which, if not avoided, could result in minor or moderate injury. Failure to follow the steps listed below could result in damage to equipment or personal injury.

- Consult qualified personnel with questions and all electrical repairs must be performed by trained and qualified personnel only.
- For motors nameplated as "belted duty only", do not operate the motor without belts properly installed.
- Motors and/or driven equipment should not be operated faster than their rated speed.
- For inverter applications, follow the inverter manufacturer's installation guidelines.
- Make sure the motor is properly secured and aligned before operation.

In the event of the resale of any of the goods, in whatever form, Resellers/Buyers will include the following language in a conspicuous place and in a conspicuous manner in a written agreement covering such sale:

> THE MANUFACTURER MAKES NO WARRANTY OR REPRESENTATIONS, EXPRESS OR IMPLIED, BY OPERATION OF LAW OR OTHERWISE, AS TO THE MERCHANTABILITY OR FITNESS FOR A PARTICULAR PURPOSE OF THE GOODS SOLD HEREUNDER. BUYER ACKNOWLEDGES THAT IT ALONE HAS DETERMINED THAT THE GOODS PURCHASED HEREUNDER WILL SUITABLY MEET THE REQUIREMENTS OF THEIR INTENDED USE. In no event will the manufacturer be liable for consequential, incidental or other damages. Even if the repair or replacement remedy shall be deemed to have failed of its essential purpose under Section 2-719 of the Uniform Commercial Code, the manufacturer shall have no liability to Buyer for consequential damages.

Resellers/Buyers agree to also include this entire document including the warnings and cautions above in a conspicuous place and in a conspicuous manner in writing to instruct users on the safe usage of the product.

This information should be read together with all other printed information supplied by Regal.

For more information contact: Regal Beloit America, Inc., 1051 Cheyenne Avenue, Grafton, Wisconsin 53024

Phone: 262-377-8810 or Fax: 262-377-3440

Continued On Next Page

Warnings and Cautions

Mechanical

IMPORTANT INFORMATION PLEASE READ CAREFULLY

The following **WARNING** and **CAUTION** information is supplied to you for your protection and to provide you with many years of trouble free and safe operation of your Regal product:

Read ALL instructions prior to operating reducer. Injury to personnel or reducer failure may be caused by improper installation, maintenance or operation.

⚠ WARNING

Indicates a hazardous situation which, if not avoided, could result in death or serious injury. Failure to follow the steps listed below could result in damage to equipment or personal injury.

- Written authorization from Regal is required to operate or use reducers in man lift or people moving devices.
- Check to make certain application does not exceed the allowable load capacities published in the current catalogue.
- Buyer shall be solely responsible for determining the adequacy of the product for any and all uses to which buyer shall apply the product. The application by buyer shall not be subject to any implied warranty of fitness for a particular purpose.
- For safety, buyer or user should provide protective guards over all shaft extensions and any moving apparatus mounted thereon. The user is responsible for checking all applicable safety codes in his area and providing suitable guards. Failure to do so may result in bodily injury and/or damage to equipment.
- Hot oil and reducers can cause severe burns. Use extreme care when removing lubrication plugs and vents.
- Make certain that the power supply is disconnected before attempting to service or remove any components. Lock out the power supply and tag it to prevent unexpected application of power.
- Reducers are not to be considered fail safe or self-locking devices. If these features are required, a properly sized, independent holding device should be utilized. Reducers should not be used as a brake.
- Any brakes that are used in conjunction with a reducer must be sized or positioned in such a way so as to not subject the reducer to loads beyond the catalogue rating.
- Lifting supports including eyebolts are to be used for vertically lifting the gearbox only and no other associated attachments or motors.
- Use of an oil with an EP additive on units with backstops may prevent proper operation of the backstop. Injury to personnel, damage to the reducer or other equipment may result.
- Overhung loads subject shaft bearings and shafts to stress which may cause premature bearing failure and/or shaft breakage from bending fatigue, if not sized properly.

⚠ CAUTION

Indicates a hazardous situation which, if not avoided, could result in minor or moderate injury. Failure to follow the steps listed below could result in damage to equipment or personal injury.

- Test run unit to verify operation. If the unit tested is a prototype, that unit must be of current production.
- If the speed reducer cannot be located in a clear and dry area with access to adequate cooling air supply, then precautions must be taken to avoid the ingestion of contaminants such as water and the reduction in cooling ability due to exterior contaminants.
- Mounting bolts should be routinely checked to ensure that the unit is firmly anchored for proper operation.

In the event of the resale of any of the goods, in whatever form, resellers/buyers will include the following language in a conspicuous place and in a conspicuous manner in a written agreement covering such sale:

> THE MANUFACTURER MAKES NO WARRANTIES OR REPRESENTATIONS, EXPRESS OR IMPLIED, BY OPERATION OF LAW OR OTHERWISE, AS TO THE MERCHANTABILITY OR FITNESS FOR A PARTICULAR PURPOSE OF THE GOODS SOLD HEREUNDER. BUYER ACKNOWLEDGES THAT IT ALONE HAS DETERMINED THAT THE GOODS PURCHASED HEREUNDER WILL SUITABLY MEET THE REQUIREMENTS OF THEIR INTENDED USE. IN NO EVENT WILL THE MANUFACTURER BE LIABLE FOR CONSEQUENTIAL, INCIDENTAL OR OTHER DAMAGES. Even if the repair or replacement remedy shall be deemed to have failed of its essential purpose under Section 2-719 of the Uniform Commercial Code, the manufacturer shall have no liability to buyer for consequential damages.

Resellers/buyers agree to also include this entire document including the warnings and cautions above in a conspicuous place and in a conspicuous manner in writing to instruct users on the safe usage of the product. This information should be read together with all other printed information supplied by Regal.

District Sales Offices and Warehouses

District Sales Offices & Warehouses can provide complete information including price and availability on both standard stock and special motors.

Canada

■ **ALBERTA, Edmonton**
3820 53rd Avenue
Edmonton, Alberta, T6B 3N7
TEL: 1-780-437-3380
FAX: 1-780-434-3448

■ **BRITISH COLUMBIA, Langley**
9087A-198 Street
Langley, British Columbia, V1M 3B1
TEL: 1-888-599-1177
FAX: 1-604-888-0337

■ **MANITOBA, Winnipeg**
19-1421 St. James Street
Winnipeg, Manitoba, R3H 0Y9
TEL: 1-204-786-6802
FAX: 1-204-786-6934

■ **ONTARIO, Toronto**
320 Superior Blvd.
Mississauga, Ontario, L5T 2N7
TEL: 1-905-670-4770
FAX: 1-905-670-8971

■ **ONTARIO, Hanover**
#638-14th Street
Hanover, Ontario, N4N 2A1
TEL: 1-800-463-1797
FAX: 1-800-225-9007

■ **QUEBEC, Saint-Laurent**
4925 Rue Levy
Saint-Laurent, Quebec, H4R 2N9
TEL: 1-514-337-8020
FAX: 1-514-337-0773

United States

■ **CALIFORNIA, Los Angeles**
TEL: 323-278-7979
FAX: 323-278-7955

■ **CALIFORNIA, San Francisco**
TEL: 1-925-371-8125
FAX: 1-925-371-5673

■ **COLORADO, Denver**
TEL: 1-800-444-7609
FAX: 1-972-245-2328

■ **NEW ENGLAND, Metro Boston, MA**
TEL: 1-888-479-7875
FAX: 1-508-987-1173

■ **FLORIDA, Tampa**
TEL: 1-813-740-2571
FAX: 1-813-663-9104

■ **GEORGIA, Atlanta**
TEL: 1-770-933-0453
FAX: 1-770-933-0549

■ **ILLINOIS, Chicago**
TEL: 1-630-458-9511
FAX: 1-630-458-1923

■ **INDIANA, Indianapolis**
TEL: 1-800-331-2911
FAX: 1-440-975-3575

■ **IOWA, Des Moines**
TEL: 1-952-935-8271
FAX: 1-952-935-8399

■ **KANSAS, Kansas City**
TEL: 1-913-599-6983
FAX: 1-913-599-6987

■ **MICHIGAN, Grand Rapids**
TEL: 1-616-249-8430
FAX: 1-616-249-8628

■ **MINNESOTA, Minneapolis**
TEL: 1-952-935-8273
FAX: 1-952-935-8399

■ **MISSOURI, St. Louis**
TEL: 1-314-714-1460
FAX: 1-314-714-1461

○ **NEW JERSEY/METRO NEW YORK/ LONG ISLAND**
TEL: 1-570-325-3684
FAX: 70-325-3870

■ **NEW YORK, Syracuse**
TEL: 1-866-505-8796
FAX: 1-570-325-3870

■ **NORTH CAROLINA, Charlotte**
TEL: 1-803-396-8200
FAX: 1-803-396-8208

■ **OHIO, Cincinnati**
TEL: 1-513-755-1000
FAX: 1-513-755-1081

■ **OHIO, Cleveland**
TEL: 1-440-951-5117
FAX: 1-440-975-3575
1-800-331-2911 (W.PA, WV)

■ **PENNSYLVANIA**
TEL: 1-570-325-3684
FAX: 1-570-325-3870

■ **TEXAS, Dallas**
TEL: 1-800-444-7609
FAX: 1-972-245-2328

■ **TEXAS, Houston**
TEL: 1-800-444-7609
FAX: 1-972-245-2328

■ **UTAH, Salt Lake City**
TEL: 1-800-444-7609
FAX: 1-972-245-2328

■ **WASHINGTON, Seattle**
TEL: 1-206-767-2780
FAX: 1-206-767-2851

■ **WISCONSIN, Milwaukee**
TEL: 1-414-475-9222
FAX: 1-414-475-9267

International

○ **INTERNATIONAL SALES**
TEL: (+1) 262-377-8810
FAX: (+1) 262-377-3440

○ **ASIA**
TEL: (+65) 6863-3473
FAX: (+65) 6863-3476

■ **CENTRAL AMERICA, MEXICO, SOUTH AMERICA & CARIBBEAN FLORIDA, Miami**
TEL: (+1) 813-621-3030
FAX: (+1) 813-252-3910

○ **EUROPE**
TEL: (+31) 6-13-12-15-92
(+31) 545-46-4640
FAX: (+31) 545-47-50-65

○ **MIDDLE EAST**
TEL: (+971) 05-5337-3239
FAX: (+971) 06-7314-965

○ **UNITED KINGDOM**
TEL: (+44) 1-299-250-859
FAX: (+44) 299-251-493

■ SALES OFFICE AND WAREHOUSE ○ SALES OFFICE ONLY

Notes

S	Steel frame
A	Aluminum frame
C	Cast Iron frame
US	Made in the USA
MX	Made in Mexico
CA	Made in Canada
CN	Made in China
2	These combination 56H base motors have mounting holes for 56 and 143-5T, and 1/2" diameter shaft with flat 1.5" long
3	Combination 56H base has mounting holes for NEMA®* 56 and 143-5T and a standard NEMA 145T frame shaft of 7/8" diameter
4	These motors have a NEMA®* 215T base mounting pattern and shaft height of 5.25", with usable length of 3-3/8" and diameter of 1-1/8" with standard key
5	Combination 56H base has mounting holes for NEMA®* 56, and has a standard NEMA 145T frame shaft of 7/8" diameter
6	Combination 56H base has mounting holes for NEMA®* 56 and NEMA 143-5T and a standard NEMA 56 shaft diameter of 5/8"
7	48YZ motors have standard 48-frame base with 1/2" diameter X 1-7/8" long shaft extension with flat. Also includes sleeve to convert shaft to 5/8" diameter with 3/16" square key
8	NEMA®* 145TC shaft, 7/8" X 2-1/4" and NEMA 56 removable base
9	S56CZ motors have mounting bases with NEMA®* 56 mounting holes, NEMA 56/143-5T C-face and a NEMA 143-5T shaft extension (7/8"diameter x 2-1/4" long)
10	Motor has mounting base with 182T mounting holes, shaft height is 4.5". Shaft is standard NEMA®* 56-5/8" diameter X 1-7/8" long
11	TEBC totally enclosed blower cooled
12	TENV totally enclosed non-vented
13	TEFC totally enclosed fan cooled
14	F1 mounting only
15	Built-in conduit box located at 12:00
16	1/2" diameter shaft - 2-1/4" long
17	5/8" diameter shaft - 2-5/8" long
18	Shaft extension has keyway and flat 180º apart for ease of mounting
19	Shaft is 5/8" diameter by 2.0" long
20	Shaft is 5/8" diameter by 2-5/8" long
21	Shaft is 3/4" diameter. by 3-1/2" long
22	Standard 5/8" diameter shaft with keyway plus 3/4" deep hole drilled and tapped to 1/4-20 UNC in end of shaft to facilitate mounting of some fan blades
23	Standard 7/8" diameter shaft with keyway plus 3/4" deep hole drilled and tapped to 1/4-20 UNC in end of shaft to facilitate mounting of some fan blades
24	Motor's shaft is 1" longer than standard
25	Shaft extension has keyway and flat 180º apart for ease of mounting. Useable shaft is 1-1/2" long by 1/2" diameter, 1/8" keyway
26	Shaft is 1/2" diameter X 1 1/2" long with flat
27	Shaft is 5/8" diameter X 1.97" long with 3/16" keyway

28	1/4" long extended through-bolts
29	IEC Frame - See IEC dimension chart in back of catalogue for dimension information
30	CW rotation only, from lead end of motor
31	For motors having a "P" suffix letter in the date code
32	Motor has terminal board connection
33	Automatic overload - cannot use with VFD
34	1" long extended through-bolts
35	Terminal studs at 12:00
36	Special BA dimension 2.31" for belt guard clearance
37	Uses drip cover kit 175305.00
38	Uses drip cover kit 175004.00
39	Uses drip cover kit 175932.00
40	Uses drip cover kit 175933.00
41	Uses drip cover kit 175846.00
42	Uses drip cover kit 175849.00
43	Uses drip cover kit 175962.00
44	Uses drip cover kit 175963.00
45	Uses drip cover kit 175614.00
46	50 Hz operation at rated HP
47	Rated at 50Hz at full rated HP
48	190/380V, 50Hz at next lowest HP @1.15 S.F.
49	Class F insulated
50	Suitable for single speed operation only
51	Mechanical centrifugal starting switch with overspeed protection, others have electronic start switch
52	Extra high starting torque
53	Capacitor start/capacitor run design for reduced amperage, others are capacitor start/induction run
54	Split phase start, capacitor run is suitable for belt drive within the airflow of the fan
55	Split phase start, capacitor run
56	Designed for inverter duty operation
57	Rated for farm duty service
58	Provision for belly band mount, no base
59	Resilient base with provision for belly band mount
60	Rigid base
61	NEMA 145TC face mounting with removable NEMA 182T rigid base
62	Provision for belly band and pedestal fan mounting, no rigid base
63	Resilient base
64	Stub shaft on ODE for manual jogging
80	Motors are compressor duty rated may be used at 1.0 service factor on general purpose application
81	C-Flange mount with rigid base
82	60 minutes duty
83	No C-Flange available for this model
84	Does not meet Class 1 Division 2 certification

*NEMA is a trademark of National Electrical Manufacturers Association and is not owned or controlled by Regal Beloit Corporation.

NEMA®* Quick Reference Dimensional Chart

Typical C-Face Motor

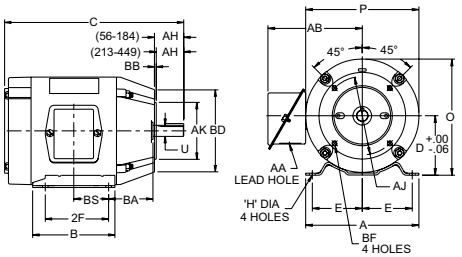

NEMA C-Face	BA Dimensions
143-5TC	2-3/4
182-4TC	3-1/2
213-5TC	4-1/4
254-6TC	4-3/4

Typical Rigid Base Motor

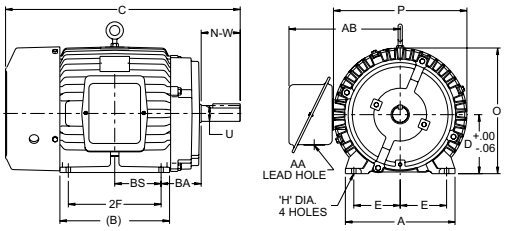

Contact your sales representative for "AB", "O" & "P" dimensions.

Refer to your LEESON® motor catalogue for "C" dimensions.

Frame	D	E	2F	H	U	N-W	AA	AH	AJ	AK	BA	BBk (MIN)	BD (MAX)	BF
48	3.00	2.12	2.75	.34 SLOT	.5000	1.50	1/2	1.69	3.750	3.000	2.50	.13	5.62	1/4-20
56	3.50	2.44	3.00	.34 SLOT	.6250	1.88	1/2	2.06	5.875	4.500	2.75	.13	6.50	3/8-16
56H	3.50	2.44	5.00	.34 SLOT	.6250	1.88	1/2	2.06	5.875	4.500	2.75	.13	6.50	3/8-16
143T	3.50	2.75	4.00	.34	.8750	2.25	3/4	2.12	5.875	4.500	2.25	.13	6.50	3/8-16
145T	3.50	2.75	5.00	.34	.8750	2.25	3/4	2.12	5.875	4.500	2.25	.13	6.50	3/8-16
182	4.50	3.75	4.50	.41	.8750	2.25	3/4	2.12	5.875	4.500	2.75	.13	6.50	3/8-16
184	4.50	3.75	5.50	.41	.8750	2.25	3/4	2.12	5.875	4.500	2.75	.13	6.50	3/8-16
182T	4.50	3.75	4.50	.41	1.125	2.75	3/4	2.62	7.250	8.500	2.75	.25	9.00	1/2-13
184T	4.50	3.75	5.50	.41	1.125	2.75	3/4	2.62	7.250	8.500	2.75	.25	9.00	1/2-13
213	5.25	4.25	5.50	.41	1.125	3.00	1	2.75	7.250	8.500	3.50	.25	9.00	1/2-13
215	5.25	4.25	7.00	.41	1.125	3.00	1	2.75	7.250	8.500	3.50	.25	9.00	1/2-13
213T	5.25	4.25	5.50	.41	1.375	3.38	1	3.12	7.250	8.500	3.50	.25	9.00	1/2-13
215T	5.25	4.25	7.00	.41	1.375	3.38	1	3.12	7.250	8.500	3.50	.25	9.00	1/2-13
254U	6.25	5.00	8.25	.53	1.375	3.75	1-1/4	3.50	7.250	8.500	4.25	.25	10.00	1/2-13
256U	6.25	5.00	10.00	.53	1.375	3.75	1-1/4	3.50	7.250	8.500	4.25	.25	10.00	1/2-13
254T	6.25	5.00	8.25	.53	1.625	4.00	1-1/4	3.75	7.250	8.500	4.25	.25	10.00	1/2-13
256T	6.25	5.00	10.00	.53	1.625	4.00	1-1/4	3.75	7.250	8.500	4.25	.25	10.00	1/2-13
284U	7.00	5.50	9.50	.53	1.625	4.88	1-1/2	4.62	9.000	10.500	4.75	.25	11.25	1/2-13
286U	7.00	5.50	11.00	.53	1.625	4.88	1-1/2	4.62	9.000	10.500	4.75	.25	11.25	1/2-13
284T	7.00	5.50	9.50	.53	1.875	4.62	1-1/2	4.38	9.000	10.500	4.75	.25	11.25	1/2-13
286T	7.00	5.50	11.00	.53	1.875	4.62	1-1/2	4.38	9.000	10.500	4.75	.25	11.25	1/2-13
284TS	7.00	5.50	9.50	.53	1.625	3.25	1-1/2	3.00	9.000	10.500	4.75	.25	11.25	1/2-13
286TS	7.00	5.50	11.00	.53	1.625	3.25	1-1/2	3.00	9.000	10.500	4.75	.25	11.25	1/2-13
324U	8.00	6.25	10.50	.66	1.875	5.62	2	5.38	11.000	12.500	5.25	.25	14.00	5/8-11
326U	8.00	6.25	12.00	.66	1.875	5.62	2	5.38	11.000	12.500	5.25	.25	14.00	5/8-11
324T	8.00	6.25	10.50	.66	2.125	5.25	2	5.00	11.000	12.500	5.25	.25	14.00	5/8-11
326T	8.00	6.25	12.00	.66	2.125	5.25	2	5.00	11.000	12.500	5.25	.25	14.00	5/8-11
324TS	8.00	6.25	10.50	.66	1.875	3.75	2	3.50	11.000	12.500	5.25	.25	14.00	5/8-11
326TS	8.00	6.25	12.00	.66	1.875	3.75	2	3.50	11.000	12.500	5.25	.25	14.00	5/8-11
364U	9.00	7.00	11.25	.66	2.125	6.38	2-1/2	6.12	11.000	12.500	5.88	.25	14.00	5/8-11
365U	9.00	7.00	12.25	.66	2.125	6.38	2-1/2	6.12	11.000	12.500	5.88	.25	14.00	5/8-11
364T	9.00	7.00	11.25	.66	2.375	5.88	2-1/2	5.62	11.000	12.500	5.88	.25	14.00	5/8-11
365T	9.00	7.00	12.25	.66	2.375	5.88	2-1/2	5.62	11.000	12.500	5.88	.25	14.00	5/8-11
364TS	9.00	7.00	11.25	.66	1.875	3.75	2-1/2	3.50	11.000	12.500	5.88	.25	14.00	5/8-11
365TS	9.00	7.00	12.25	.66	1.875	3.75	2-1/2	3.50	11.000	12.500	5.88	.25	14.00	5/8-11
404U	10.00	8.00	12.25	.81	2.375	7.12	3	6.88	11.000	12.500	6.62	.25	15.50	5/8-11
405U	10.00	8.00	13.75	.81	2.375	7.12	3	6.88	11.000	12.500	6.62	.25	15.50	5/8-11
404T	10.00	8.00	12.25	.81	2.875	7.25	3	7.00	11.000	12.500	6.62	.25	15.50	5/8-11
405T	10.00	8.00	13.75	.81	2.875	7.25	3	7.00	11.000	12.500	6.62	.25	15.50	5/8-11
404TS	10.00	8.00	12.25	.81	2.125	4.25	3	4.00	11.000	12.500	6.62	.25	15.50	5/8-11
405TS	10.00	8.00	13.75	.81	2.125	4.25	3	4.00	11.000	12.500	6.62	.25	15.50	5/8-11
444U	11.00	9.00	14.50	.81	2.875	8.62	3	8.38	14.000	16.000	7.50	.25	18.00	5/8-11
445U	11.00	9.00	16.50	.81	2.875	8.62	3	8.38	14.000	16.000	7.50	.25	18.00	5/8-11
444T	11.00	9.00	14.50	.81	3.375	8.50	3	8.25	14.000	16.000	7.50	.25	18.00	5/8-11
445T	11.00	9.00	16.50	.81	3.375	8.50	3	8.25	14.000	16.000	7.50	.25	18.00	5/8-11
444TS	11.00	9.00	14.50	.81	2.375	4.75	3	4.50	14.000	16.000	7.50	.25	18.00	5/8-11
445TS	11.00	9.00	16.50	.81	2.375	4.75	3	4.50	14.000	16.000	7.50	.25	18.00	5/8-11
447T	11.00	9.00	20.00	.81	3.375	8.50	3	8.25	14.000	16.000	7.50	.25	18.00	5/8-11
449T	11.00	9.00	25.00	.81	3.375	8.50	3	8.25	14.000	16.000	7.50	.25	18.00	5/8-11
447TS	11.00	9.00	20.00	.81	2.375	4.75	4 NPT	4.50	14.000	16.000	7.50	.25	18.00	5/8-11
449TS	11.00	9.00	25.00	.81	2.375	4.75	4 NPT	4.50	14.000	16.000	7.50	.25	18.00	5/8-11

*NEMA is a trademark of National Electrical Manufactuers Association and is not owned or controlled by Regal Beloit Corporation.

Regal Beloit Canada ULC
320 Superior Blvd.
Mississauga, ON L5T2N7
PH: 905-670-4770
Fax: 905-670-4378

www.regalbeloit.com

APPLICATION CONSIDERATIONS

The proper selection and application of products and components, including the related area of product safety, is the responsibility of the customer. Operating and performance requirements and potential associated issues will vary appreciably depending upon the use and application of such products and components. The scope of the technical and application information included in this publication is necessarily limited. Unusual operating environments and conditions, lubrication requirements, loading supports, and other factors can materially affect the application and operating results of the products and components and the customer should carefully review its requirements. Any technical advice or review furnished by Regal Beloit America, Inc. and/or its affiliates ("Regal") with respect to the use of products and components is given in good faith and without charge, and Regal assumes no obligation or liability for the advice given, or results obtained, all such advice and review being given and accepted at customer's risk.

For a copy of our Standard Terms and Conditions of Sale, please visit https://www.regalbeloit.com/Terms-and-Conditions-of-Sale. These terms and conditions of sale, disclaimers and limitations of liability apply to any person who may buy, acquire or use a Regal product referred to herein, including any person who buys from a licensed distributor of these branded products.

Regal, LEESON, Bravo, CTAC, ECO AG, Eco Saver, Extreme Duck, IRIS, Leeson FHP Electric Motors, Multiguard, Speedmaster, Ultimate e, Washguard and Wattsaver are trademarks of Regal Beloit Corporation or one of its affiliated companies.

©1972, 2019 Regal Beloit Corporation, All Rights Reserved. MCC18001E L1050C

PRODUCT CATALOGUE Effective March 2019