MaxMotion

Product catalogue

2023

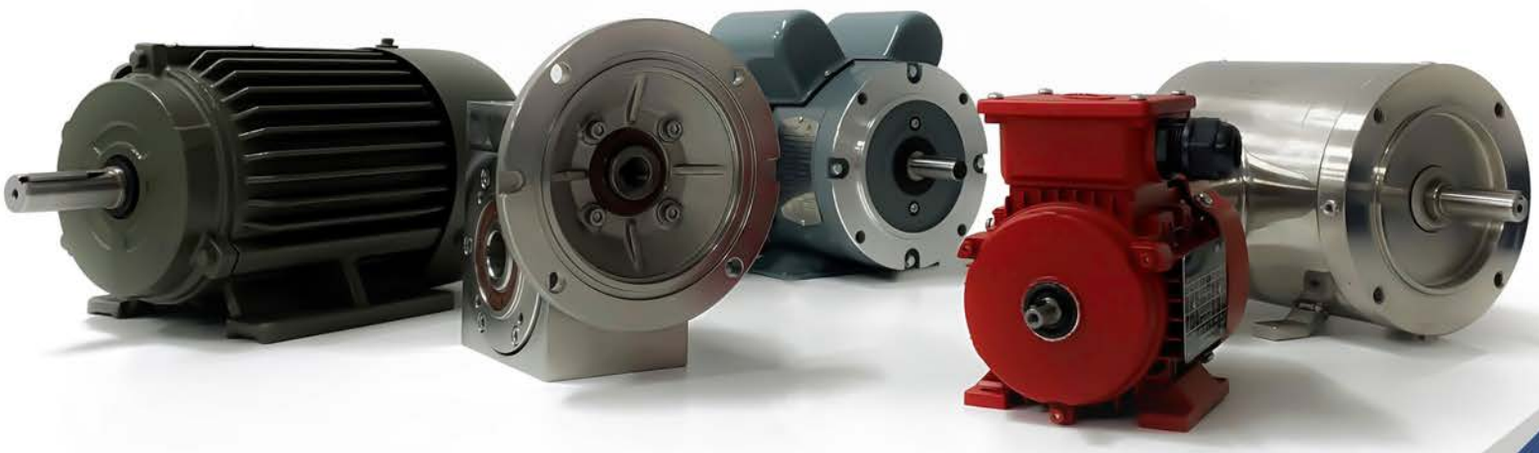

MEP 1982

About us

Since 1982, MEP has become a leader in the importing and distribution of Industrial electrical products, specializing in electric motors, drives and power transmission products.

With Offices, and Warehouses Across North America, we offer a Full Range of Products that allow us to meet the growing needs of our partners.

Our expertise places us as trusted partners with our clients to work across a wide array applications including Mining, Paper Processing, Agriculture, Ventilation, Pumping, Food Processing & Conveying.

In 2002, MEP established a line of high quality motor and gearing products under the brand Max Motion.

Direct partnerships with our factories allows MEP to offer you premium goods at very competitive prices.

Nema Quick Reference Dimensional Chart

Typical C-face Motor

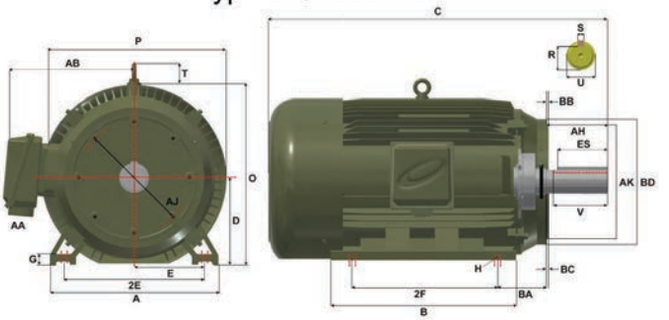

Typical Rigid Base Motor

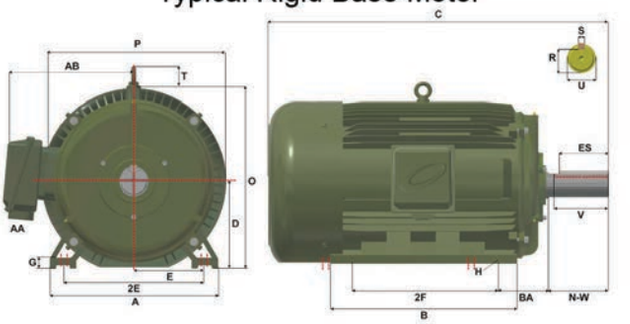

Visit www.mep.ca and select specific MaxMotion model for "AB", "O", & "P" Dimensions

Refer to your MEP catalog for "C" Dim.

FRAME	D	E	2F	H	U	N-W	AA	AH	AJ	AK	BA	BB (MIN)	BD (MAX)	H (HOLES)
48	3.00	2.12	2.75	.34 SLOT	.5000	1.50	1/2	1.69	3.750	3.000	2.50	.13	5.62	1/4-20
56	3.50	2.44	3.00	.34 SLOT	.6250	1.88	1/2	2.06	5.875	4.500	2.75	.13	6.50	3/8-16
56H	3.50	2.44	5.00	.34 SLOT	.6250	1.88	1/2	2.06	5.875	4.500	2.75	.13	6.50	3/8-16
143T	3.50	2.75	4.00	.34	.8750	2.25	3/4	2.12	5.875	4.500	2.25	.13	6.50	3/8-16
145T	3.50	2.75	5.00	.34	.8750	2.25	3/4	2.12	5.875	4.500	2.25	.13	6.50	3/8-16
182	4.50	3.75	4.50	.41	.8750	2.25	3/4	2.12	5.875	4.500	2.75	.13	6.50	3/8-16
184	4.50	3.75	5.50	.41	.8750	2.25	3/4	2.12	5.875	4.500	2.75	.13	6.50	3/8-16
182T	4.50	3.75	4.50	.41	1.125	2.75	3/4	2.62	7.250	8.500	2.75	.25	9.00	1/2-13
184T	4.50	3.75	5.50	.41	1.125	2.75	3/4	2.62	7.250	8.500	2.75	.25	9.00	1/2-13
213	5.25	4.25	5.50	.41	1.125	3.00	1	2.75	7.250	8.500	3.50	.25	9.00	1/2-13
215	5.25	4.25	7.00	.41	1.125	3.00	1	2.75	7.250	8.500	3.50	.25	9.00	1/2-13
213T	5.25	4.25	5.50	.41	1.375	3.38	1	3.12	7.250	8.500	3.50	.25	9.00	1/2-13
215T	5.25	4.25	7.00	.41	1.375	3.38	1	3.12	7.250	8.500	3.50	.25	9.00	1/2-13
254U	6.25	5.00	8.25	.53	1.375	3.75	1-1/4	3.50	7.250	8.500	4.25	.25	10.00	1/2-13
256U	6.25	5.00	10.00	.53	1.375	3.75	1-1/4	3.50	7.250	8.500	4.25	.25	10.00	1/2-13
254T	6.25	5.00	8.25	.53	1.625	4.00	1-1/4	3.75	7.250	8.500	4.25	.25	10.00	1/2-13
256T	6.25	5.00	10.00	.53	1.625	4.00	1-1/4	3.75	7.250	8.500	4.25	.25	10.00	1/2-13
284U	7.00	5.50	9.50	.53	1.625	4.88	1-1/2	4.62	9.000	10.500	4.75	.25	11.25	1/2-13
286U	7.00	5.50	11.00	.53	1.625	4.88	1-1/2	4.62	9.000	10.500	4.75	.25	11.25	1/2-13
284T	7.00	5.50	9.50	.53	1.875	4.62	1-1/2	4.38	9.000	10.500	4.75	.25	11.25	1/2-13
286T	7.00	5.50	11.00	.53	1.875	4.62	1-1/2	4.38	9.000	10.500	4.75	.25	11.25	1/2-13
284TS	7.00	5.50	9.50	.53	1.625	3.25	1-1/2	3.00	9.000	10.500	4.75	.25	11.25	1/2-13
286TS	7.00	5.50	11.00	.53	1.625	3.25	1-1/2	3.00	9.000	10.500	4.75	.25	11.25	1/2-13
324U	8.00	6.25	10.50	.66	1.875	5.62	2	5.38	11.000	12.500	5.25	.25	14.00	5/8-11
326U	8.00	6.25	12.00	.66	1.875	5.62	2	5.38	11.000	12.500	5.25	.25	14.00	5/8-11
324T	8.00	6.25	10.50	.66	2.125	5.25	2	5.00	11.000	12.500	5.25	.25	14.00	5/8-11
326T	8.00	6.25	12.00	.66	2.125	5.25	2	5.00	11.000	12.500	5.25	.25	14.00	5/8-11
324TS	8.00	6.25	10.50	.66	1.875	3.75	2	3.50	11.000	12.500	5.25	.25	14.00	5/8-11
326TS	8.00	6.25	12.00	.66	1.875	3.75	2	3.50	11.000	12.500	5.25	.25	14.00	5/8-11
364U	9.00	7.00	11.25	.66	2.125	6.38	2-1/2	6.12	11.000	12.500	5.88	.25	14.00	5/8-11
365U	9.00	7.00	12.25	.66	2.125	6.38	2-1/2	6.12	11.000	12.500	5.88	.25	14.00	5/8-11
364T	9.00	7.00	11.25	.66	2.375	5.88	2-1/2	5.62	11.000	12.500	5.88	.25	14.00	5/8-11
365T	9.00	7.00	12.25	.66	2.375	5.88	2-1/2	5.62	11.000	12.500	5.88	.25	14.00	5/8-11
364TS	9.00	7.00	11.25	.66	1.875	3.75	2-1/2	3.50	11.000	12.500	5.88	.25	14.00	5/8-11
365TS	9.00	7.00	12.25	.66	1.875	3.75	2-1/2	3.50	11.000	12.500	5.88	.25	14.00	5/8-11
404U	10.00	8.00	12.25	.81	2.375	7.12	3	6.88	11.000	12.500	6.62	.25	15.50	5/8-11
405U	10.00	8.00	13.75	.81	2.375	7.12	3	6.88	11.000	12.500	6.62	.25	15.50	5/8-11
404T	10.00	8.00	12.25	.81	2.875	7.25	3	7.00	11.000	12.500	6.62	.25	15.50	5/8-11
405T	10.00	8.00	13.75	.81	2.875	7.25	3	7.00	11.000	12.500	6.62	.25	15.50	5/8-11
404TS	10.00	8.00	12.25	.81	2.125	4.25	3	4.00	11.000	12.500	6.62	.25	15.50	5/8-11
405TS	10.00	8.00	13.75	.81	2.125	4.25	3	4.00	11.000	12.500	6.62	.25	15.50	5/8-11
444U	11.00	9.00	14.50	.81	2.875	8.62	3	8.38	14.000	16.000	7.50	.25	18.00	5/8-11
445U	11.00	9.00	16.50	.81	2.875	8.62	3	8.38	14.000	16.000	7.50	.25	18.00	5/8-11
444T	11.00	9.00	14.50	.81	3.375	8.50	3	8.25	14.000	16.000	7.50	.25	18.00	5/8-11
445T	11.00	9.00	16.50	.81	3.375	8.50	3	8.25	14.000	16.000	7.50	.25	18.00	5/8-11
444TS	11.00	9.00	14.50	.81	2.375	4.75	3	4.50	14.000	16.000	7.50	.25	18.00	5/8-11
445TS	11.00	9.00	16.50	.81	2.375	4.75	3	4.50	14.000	16.000	7.50	.25	18.00	5/8-11
447T	11.00	9.00	20.00	.81	3.375	8.50	3	8.25	14.000	16.000	7.50	.25	18.00	5/8-11
449T	11.00	9.00	25.00	.81	3.375	8.50	3	8.25	14.000	16.000	7.50	.25	18.00	5/8-11
447TS	11.00	9.00	20.00	.81	2.375	4.75	4 NPT	4.50	14.000	16.000	7.50	.25	18.00	5/8-11
449TS	11.00	9.00	25.00	.81	2.375	4.75	4 NPT	4.50	14.000	16.000	7.50	.25	18.00	5/8-11

IEC QUICK REFERENCE KEY DIMENSIONS CHART

B3 - Foot Mounted Motor

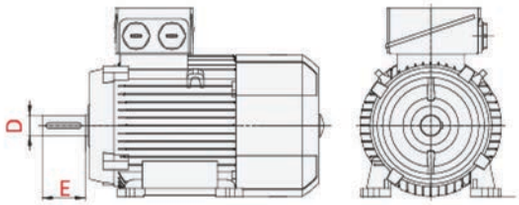

B5 - flange ('D' flange)

The flange diameter is bigger than the motor frame diameter. The holes are not tapped. B5 flanges are available for all motor sizes.

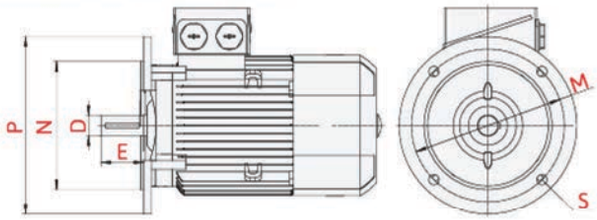

B14A - flange ('C' face)

The flange diameter is smaller than the motor frame diameter. The holes are tapped. Available up to 160frame.

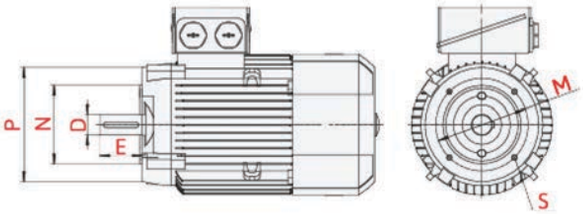

B14B - flange

The flange diameter is between B14A & B5 flange. The holes are tapped. Available up to 112frame.

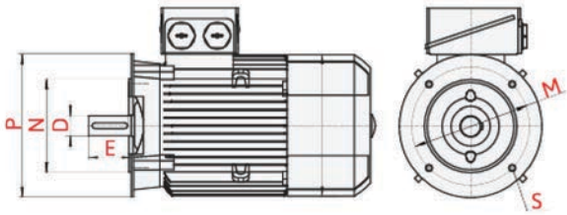

Motor Type	SIZE	Shaft Diameter x Length D x E 2p	Shaft Diameter x Length D x E 4,6,8p	B5 FLANGE ("D" flange) PCD M	B5 Spigot N	B5 Diameter P	B5 Hole Dia S	B14A FLANGE ("C" face) PCD M	B14A Spigot N	B14A Diameter P	B14A Hole S	B14B FLANGE PCD M	B14B Spigot N	B14B Diameter P	B14B Hole S
1TZ9	56 frame	Ø9 x 20		100	80	120	7	65	50	80	M5	85	70	105	M6
1TZ9	63 frame	Ø11 x 23		115	95	140	10	75	60	90	M5	100	80	120	M6
1TZ9	71 frame	Ø14 x 30		130	110	160	10	85	70	105	M6	115	95	140	M8
1TZ9	80 frame	Ø19 x 40		165	130	200	12	100	80	120	M6	130	110	160	M8
1TZ9	90 frame	Ø24 x 50		165	130	200	12	115	95	140	M8	130	110	160	M8
1TZ9	100 frame	Ø28 x 60		215	180	250	14.5	130	110	160	M8	165	130	200	M10
1TZ9	112 frame	Ø28 x 60		215	180	250	14.5	130	110	160	M8	165	130	200	M10
1TZ9	132 frame	Ø38 x 80		265	230	300	14.5	165	130	200	M10	215	180	215	M12
1TZ9	160 frame	Ø42 x 110		300	250	350	18.5	215	180	250	M12	265	230	300	M12
1TZ9	180 frame	Ø48 x 110		300	250	350	18.5	--	--	--	--	--	--	--	--
1TZ9	200 frame	Ø55 x 100		350	300	400	18.5	--	--	--	--	--	--	--	--
1TZ9	225 frame	Ø55 x 110	Ø60 x 140	400	350	450	18.5	--	--	--	--	--	--	--	--
1TZ9	250 frame	Ø60 x 140	Ø65 x 140	500	450	550	18.5	--	--	--	--	--	--	--	--
1TZ9	280 frame	Ø65 x 140	Ø75 x 140	500	450	550	18.5	--	--	--	--	--	--	--	--
1TZ9	315 frame	Ø65 x 141	Ø80 x 170	600	550	660	24								
1TZ5	315 frame	Ø75 x 140	Ø85 x 170	740	680	800	24	--	--	--	--	--	--	--	--
1TZ5	355 frame	Ø75 x 140	Ø95 x 170	840	780	900	24	--	--	--	--	--	--	--	--

SIZE	Shaft Diameter D 2p	Shaft Diameter D 4,6,8p	Hole in Shaft Centre
56 frame	Ø9		M3
63 frame	Ø11		M4
71 frame	Ø14		M5
80 frame	Ø19		M6
90 frame	Ø24		M8
100 frame	Ø28		M10
112 frame	Ø28		M10
132 frame	Ø38		M12
160 frame	Ø42		M16
180 frame	Ø48		M16
200 frame	Ø55		M20
225 frame	Ø55	Ø60	M20
250 frame	Ø60	Ø65	M20
280 frame	Ø65	Ø75	M20
315 frame	Ø65	Ø80	M20
355 frame	Ø75	Ø95	M20 | M24

PCD - Pitch Circle Diameter

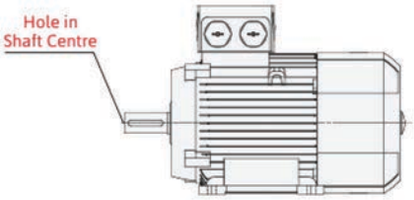

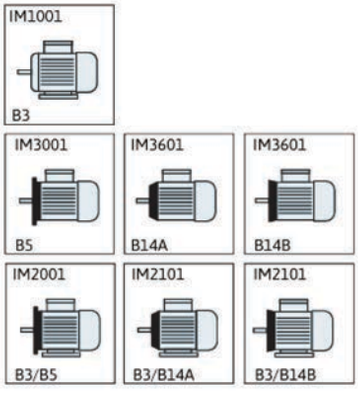

TABLE OF CONTENTS

NEMA MOTORS

GENERAL PURPOSE THREE PHASE MOTORS

	PAGE
T-Frame TEFC Cast Iron	4, 5, 6, 7
T-Frame ODP Rolled Steel & Cast Iron	8, 9, 10
56C TEFC Rolled Steel	19

GENERAL PURPOSE SINGLE PHASE MOTORS

Farm Duty TEFC Rolled Steel	20

PUMP MOTORS

JM & JP TEFC Three Phase Cast Iron	11, 12, 13
JM TEFC Three Phase Stainless Steel	18
56J TEFC Three Phase Rolled Steel	21
56J TEFC Single Phase Rolled Steel	22

STAINLESS STEEL MOTORS

TEFC & TENV Three Phase Stainless Steel	14, 15, 16, 17
JM TEFC Three Phase Stainless Steel	18

PERMANENT MAGNET DC MOTORS

90 & 180VDC	31
Low Voltage 12, 24 & 48VDC	32

HVAC

Fan, Blower & PSC	30

IEC MOTORS

GENERAL PURPOSE THREE PHASE MOTORS

TEFC Three Phase Aluminium & Cast Iron	23, 24, 25, 26, 27

STAINLESS STEEL MOTORS

TENV & TEFC Three Phase Stainless Steel	28, 29

SPEED REDUCERS

RIGHT ANGLE WORM GEAR REDUCERS

NEMA Input Aluminium	33
NEMA Input Stainless Steel	34

MOTOR ACCESSORIES

NEMA MOTOR BASE

Adjustable Bases & Transition Bases	35

PREMIUM DESIGN B NEMA 12-12

CAST IRON CONSTRUCTION RIGID BASE

TEFC TOTALLY ENCLOSED FAN COOLED

MaxMotion

Features:

- MG-1 Design B and MG-1 Part 31
- Meets or exceeds NEMA Premium Efficiencies
- Factory Certified Division 2, Class I Groups A, B, C, D, Class II Groups F&G
- Meets Temperature Code T2B
- IP55 enclosure
- Rated and Nameplated 60/50 Hertz 190/380-415 or 380-415 @ 1.0 SF
- Inverter Duty 10:1 Constant Torque, 20:1 Variable Torque 1.0 SF meets MG1 parts 31.4.4.2
- 1.25 Service Factor 1-50HP, 1.15 60-300HP
- Class F Insulation
- F1 Standard Assembly, Reversible to F2 Assembly
- Provision to accept Drip Cover, See Accessories Page
- CSAus & CE Certified
- 36 Months Warranty

HP	RPM	VOLTS	FRAME	CAT NO.	NOM EFF.	F.L. AMPS	WT (Lbs)	"C" DIMENSION (Inch)	C-FACE KITS	D-FLANGE KITS	FOOT NOTES
1	3600	208-230/460	143T	MQP-1	77	3.7-3.5/1.75	41	12.6	W 140TC	W 140TD	68
	3600	575	143T	MPP-1	77	1.4	41	12.6	W 140TC	W 140TD	
	1800	208-230/460	143T	MQP-2	85.5	3.2-3/1.5	47	13.6	W 140TC	W 140TD	68
	1800	575	143T	MPP-2	85.5	1.2	47	13.6	W 140TC	W 140TD	
	1200	208-230/460	145T	MQP-3	82.5	4-3.6/1.8	52	14.6	W 140TC	W 140TD	68
	1200	575	145T	MPP-3	82.5	1.44	52	14.6	W 140TC	W 140TD	
	900	208-230/460	182T	MQP-4	75.5	4.2-3.8/1.9	64	16.4	W 180TC	W 180TD	68
	900	575	182T	MPP-4	75.5	1.55	64	16.4	W 180TC	W 180TD	
1.5	3600	208-230/460	143T	MQP-6	84.1	4.4-4/2.2	46	13.6	W 140TC	W 140TD	68
	3600	575	143T	MPP-6	84.1	1.76	46	13.6	W 140TC	W 140TD	
	1800	208-230/460	145T	MQP-7	86.5	4.7-4.4/2.2	55	14.6	W 140TC	W 140TD	68
	1800	575	145T	MPP-7	86.5	1.8	55	14.6	W 140TC	W 140TD	
	1200	208-230/460	182T	MQP-8	87.5	5.2-4.8/2.4	95	16.1	W 180TC	W 180TD	68
	1200	575	182T	MPP-8	87.5	1.9	95	16.1	W 180TC	W 180TD	
	900	208-230/460	184T	MQP-9	78.5	5.97-5.4/2.7	64	17.1	W 180TC	W 180TD	68
	900	575	184T	MPP-9	78.5	2.16	64	17.1	W 180TC	W 180TD	
2	3600	208-230/460	145T	MQP-11	85.5	5.8-5.3/2.65	52	14.6	W 140TC	W 140TD	68
	3600	575	145T	MPP-11	85.5	2.05	52	14.6	W 140TC	W 140TD	
	1800	208-230/460	145T	MQP-12	86.5	6.6-6.2/3.1	56	14.6	W 140TC	W 140TD	68
	1800	575	145T	MPP-12	86.5	2.4	56	14.6	W 140TC	W 140TD	
	1200	208-230/460	184T	MQP-13	88.5	6.4-5.9/2.95	103	17.1	W 180TC	W 180TD	68
	1200	575	184T	MPP-13	88.5	2.4	103	17.1	W 180TC	W 180TD	
	900	208-230/460	213T	MQP-14	84	7.52-6.8/3.4	150	18.9	W 210TC	W 210TD	68
	900	575	213T	MPP-14	84	2.65	150	18.9	W 210TC	W 210TD	
3	3600	208-230/460	145T	MQP-16S	86.5	7.9-7.4/3.7	90	14.6	W 140TC	W 140TD	68
	3600	575	145T	MPP-16S	86.5	3	90	14.6	W 140TC	W 140TD	
	3600	208-230/460	182T	MQP-16	86.5	7.9-7.4/3.7	97	16.1	W 180TC	W 180TD	68
	3600	575	182T	MPP-16	86.5	3	97	16.1	W 180TC	W 180TD	
	1800	208-230/460	182T	MQP-17	89.5	8.2-7.6/4	97	16.1	W 180TC	W 180TD	68
	1800	575	182T	MPP-17	89.5	3.2	97	16.1	W 180TC	W 180TD	
	1200	208-230/460	213T	MQP-18	89.5	9.2-8.4/4.2	136	18.9	W 210TCP	N/A	68
	1200	575	213T	MPP-18	89.5	3.4	136	18.9	W 210TCP	N/A	
	900	208-230/460	215T	MQP-19	85.5	10.17-9.2/4.6	167	20.4	W 210TC	W 210TD	68
	900	575	215T	MPP-19	85.5	3.68	167	20.4	W 210TC	W 210TD	

Footnotes:

* **68** = Rated and Nameplated 60/50 Hertz

CHART CONTINUES ON NEXT PAGE

CHART CONTINUED FROM PREVIOUS PAGE

HP	RPM	VOLTS	FRAME	CAT NO.	NOM EFF.	F.L. AMPS	WT (Lbs)	"C" DIMENSION (Inch)	C-FACE KITS	D-FLANGE KITS	FOOT NOTES
5	3600	208-230/460	184T	MQP-21	88.5	13-11.6/5.8	110	17.1	W 180TC	W 180TD	68
	3600	575	184T	MPP-21	88.5	4.6	110	17.1	W 180TC	W 180TD	
	1800	208-230/460	184T	MQP-22	89.5	14-13.6/6.8	112	17.1	W 180TC	W 180TD	68
	1800	575	184T	MPP-22	89.5	5.4	112	17.1	W 180TC	W 180TD	
	1200	208-230/460	215T	MQP-23	89.5	15.6-14.2/7.1	162	20.4	W 210TCP	N/A	68
	1200	575	215T	MPP-23	89.5	5.68	162	20.4	W 210TCP	N/A	
	900	208-230/460	254T	MQP-24	86.5	17.69-16/8	286	23.2	W 250TC	W 250TD	68
	900	575	254T	MPP-24	86.5	6.5	286	23.2	W 250TC	W 250TD	
7.5	3600	208-230/460	184T	MQP-26S	86.5	18.8-17.6/8.8	134	17.1	W 180TC	W 180TD	68
	3600	575	184T	MPP-26S	89.5	7	134	17.1	W 180TC	W 180TD	
	3600	208-230/460	213T	MQP-26	89.5	18.8-17.6/8.8	150	18.9	W 210TC	W 210TD	68
	3600	575	213T	MPP-26	89.5	7	150	18.9	W 210TC	W 210TD	
	1800	208-230/460	213T	MQP-27	91.7	19.8-18.4/9.2	150	18.9	W 210TCP	N/A	68
	1800	575	213T	MPP-27	91.7	7.4	150	18.9	W 210TCP	N/A	
	1200	208-230/460	254T	MQP-28	91	23-20.8/10.4	272	23.2	W 250TC	W 250TD	68
	1200	575	254T	MPP-28	91	7.8	272	23.2	W 250TC	W 250TD	
	900	208-230/460	256T	MQP-29	86.5	26.54-24/11.5	315	25	W 250TC	W 250TD	68
	900	575	256T	MPP-29	86.5	9.6	315	25	W 250TC	W 250TD	
10	3600	208-230/460	215T	MQP-31	90.2	23.9-22.8/11.4	167	20.4	W 210TC	W 210TD	68
	3600	575	215T	MPP-31	90.2	9.1	167	20.4	W 210TC	W 210TD	
	1800	208-230/460	215T	MQP-32	91.7	26-24/12	167	20.4	W 210TCP	N/A	68
	1800	575	215T	MPP-32	91.7	9.6	167	20.4	W 210TCP	N/A	
	1200	208-230/460	256T	MQP-33	91	27.2-25.6/12.8	293	25	W 250TCP	W 250TDP	68
	1200	575	256T	MPP-33	91	10.2	293	25	W 250TCP	W 250TDP	
	900	208-230/460	284T	MQP-34	89.5	34.28-31/15.5	392	26.6	W 280TC	W 280TD	68
	900	575	284T	MPP-34	89.5	12.5	392	26.6	W 280TC	W 280TD	
15	3600	208-230/460	215T	MQP-36S	91	36.2-34.4/17.2	162	20.4	W 210TCP	N/A	68
	3600	575	215T	MPP-36S	91	13.8	162	20.4	W 210TCP	N/A	
	3600	208-230/460	254T	MQP-36	91	36.2-34.4/17.2	286	23.2	W 250TC	W 250TD	68
	3600	575	254T	MPP-36	91	13.8	286	23.2	W 250TC	W 250TD	
	1800	208-230/460	254T	MQP-37	92.4	37.2-36.4/18.2	297	23.2	W 250TCP	W 250TDP	68
	1800	575	254T	MPP-37	92.4	14.6	297	23.2	W 250TCP	W 250TDP	
	1200	208-230/460	284T	MQP-38	91.7	41-38/19	363	26.6	W 280TC	W 280TD	68
	1200	575	284T	MPP-38	91.7	15.2	363	26.6	W 280TC	W 280TD	
	900	208-230/460	286T	MQP-39	89.5	50.87-46/23	394	28.1	W 280TC	W 280TD	68
	900	575	286T	MPP-39	89.5	18.5	394	28.1	W 280TC	W 280TD	
20	3600	208-230/460	256T	MQP-41	91	48.5-46/23	315	25	W 250TC	W 250TD	68
	3600	575	256T	MPP-41	91	18.4	315	25	W 250TC	W 250TD	
	1800	208-230/460	256T	MQP-42	93	51.8-48.4/24.2	315	25	W 250TCP	W 250TDP	68
	1800	575	256T	MPP-42	93	19.1	315	25	W 250TCP	W 250TDP	
	1200	208-230/460	284T	MQP-43	91.7	54.7-50/25	394	28.1	W 280TC	W 280TD	68
	1200	575	284T	MPP-43	91.7	20	394	28.1	W 280TC	W 280TD	
	900	208-230/460	324T	MQP-44	90.2	64.13-58/28	444	29.8	W 320TC	W 320TD	68
	900	575	324T	MPP-44	90.2		444	29.8	W 320TC	W 320TD	

Footnotes:

* **68** = Rated and Nameplated 60/50 Hertz

CHART CONTINUES ON NEXT PAGE

PREMIUM DESIGN B NEMA 12-12

CAST IRON CONSTRUCTION RIGID BASE

TEFC TOTALLY ENCLOSED FAN COOLED

Max Motion

CHART CONTINUED FROM PREVIOUS PAGE

HP	RPM	VOLTS	FRAME	CAT NO.	NOM EFF.	F.L. AMPS	WT (Lbs)	"C" DIMENSION (Inch)	C-FACE KITS	D-FLANGE KITS	FOOT NOTES
25	3600	208-230/460	284TS	MQP-46	91.7	61-57/28.5	385	25.2	W 280TC	W 280TD	68
	3600	575	284TS	MPP-46	91.7	22.4	385	25.2	W 280TC	W 280TD	
	1800	208-230/460	284T	MQP-47	93.6	65-60/30	392	26.6	W 280TC	W 280TD	68
	1800	575	284T	MPP-47	93.6	24	392	26.6	W 280TC	W 280TD	
	1200	208-230/460	324T	MQP-48	93	67-61/30.5	508	29.8	W 320TC	W 320TD	68
	1200	575	324T	MPP-48	93	24.4	508	29.8	W 320TC	W 320TD	
	900	208-230/460	326T	MQP-49	90.2	84.04-76/38	469	31.3	W 320TC	W 320TD	68
	900	575	326T	MPP-49	90.2	30.5	469	31.3	W 320TC	W 320TD	
30	3600	208-230/460	286TS	MQP-51	91.7	74-69/34.5	409	26.7	W 280TC	W 280TD	68
	3600	575	286TS	MPP-51	91.7	27.6	409	26.7	W 280TC	W 280TD	
	1800	208-230/460	286T	MQP-52	93.6	76-70.6/35.3	418	28.1	W 280TC	W 280TD	68
	1800	575	286T	MPP-52	93.6	28.2	418	28.1	W 280TC	W 280TD	
	1200	208-230/460	326T	MQP-53	93	78-71.8/35.9	537	31.3	W 320TC	W 320TD	68
	1200	575	326T	MPP-53	93	28.7	537	31.3	W 320TC	W 320TD	
	900	208-230/460	364T	MQP-54	91.7	97.31-88/44	607	32.5	W 360TC	W 360TD	68
	900	575	364T	MPP-54	91.7	35	607	32.5	W 360TC	W 360TD	
40	3600	208-230/460	324TS	MQP-56	92.4	94.9-91/45.5	510	28.3	W 320TC	W 320TD	68
	3600	575	324TS	MPP-56	92.4	36.4	510	28.3	W 320TC	W 320TD	
	1800	208-230/460	324T	MQP-57	94.1	100-93.2/46.6	519	29.8	W 320TC	W 320TD	68
	1800	575	324T	MPP-57	94.1	37.3	519	29.8	W 320TC	W 320TD	
	1200	208-230/460	364T	MQP-58	94.1	110-100/50	697	32.5	W 360TCP	W 360TDP	68
	1200	575	364T	MPP-58	94.1	40	697	32.5	W 360TCP	W 360TDP	
	900	208-230/460	365T	MQP-59	91.7	123.85-112/56	902	33.5	W 360TC	W 360TD	68
	900	575	365T	MPP-59	91.7	36	902	33.5	W 360TC	W 360TD	
50	3600	208-230/460	324TS	MQP-61	93	124-116.2/58.1	548	29.8	W 320TC	W 320TD	68
	3600	575	324TS	MPP-61	93	46.4	548	29.8	W 320TC	W 320TD	
	1800	208-230/460	326T	MQP-62	93	124-116.2/58.1	594	31.3	W 320TC	W 320TD	68
	1800	575	326T	MPP-62	94.5	46.6	594	31.3	W 320TC	W 320TD	
	1200	208-230/460	364T	MQP-63	94.1	139-126/63	752	33.5	W 360TCP	W 360TDP	68
	1200	575	364T	MPP-63	94.1	50	752	33.5	W 360TCP	W 360TDP	
	900	208-230/460	404T	MQP-64	92.4	147.07-133/66.5	902	38	W 400TC	W 400TD	68, RB
	900	575	404T	MPP-64	92.4	53.2	902	38	W 400TC	W 400TD	RB
60	3600	208-230/460	364TS	MQP-66	93.6	146-132/66	704	31.4	W 360TC	W 360TD	68
	3600	575	364TS	MPP-66	93.6	52.8	704	31.4	W 360TC	W 360TD	
	1800	208-230/460	364T	MQP-67	95	154-139/69.5	766	32.5	W 360TCP	W 360TDP	68
	1800	575	364T	MPP-67	95	55.6	766	32.5	W 360TDP	W 360TDP	
	1200	208-230/460	404T	MQP-68	94.5	154-140/70	1000	38	W 400TCP	W 400TDP	68, RB
	1200	575	404T	MPP-68	94.5	56	1000	38	W 400TCP	W 400TDP	RB
	900	208-230/460	405T	MQP-69	92.4	176.92-160/80	1010	38	W 400TC	W 400TD	68, RB
	900	575	405T	MPP-69	92.4	64	1010	38	W 400TC	W 400TD	RB
75	3600	208-230/460	365TS	MQP-71	93.6	184-166/83	766	31.4	W 360TC	W 360TD	68
	3600	575	365TS	MPP-71	93.6	66.5	766	31.4	W 360TC	W 360TD	
	1800	208-230/460	365T	MQP-72	95.4	193-174/87	783	33.5	W 360TCP	W 360TDP	68
	1800	575	365T	MPP-72	95.4	70	783	33.5	W 360TCP	W 360TDP	
	1200	208-230/460	405T	MQP-73	94.5	196.8-178/89	1120	38	W 400TCP	W 400TDP	68, RB
	1200	575	405T	MPP-73	94.5	70	1120	38	W 400TCP	W 400TDP	RB
	900	460	444T	MQP-74	93.6	214.52-194/97	1353	44.3	W 440TC	W 440TD	68, RB
	900	575	444T	MPP-74	93.6	77.6	1353	44.3	W 440TC	W 440TD	RB

Footnotes:

* **68** = Rated and Nameplated 60/50 Hertz
* **RB** = Roller Bearing Installed on DE

CHART CONTINUES ON NEXT PAGE

PREMIUM DESIGN B NEMA 12-12

CAST IRON CONSTRUCTION RIGID BASE

TEFC TOTALLY ENCLOSED FAN COOLED

CHART CONTINUED FROM PREVIOUS PAGE

HP	RPM	VOLTS	FRAME	CAT NO.	NOM EFF.	F.L. AMPS	WT (Lbs)	"C" DIMENSION (Inch)	C-FACE KITS	D-FLANGE KITS	FOOT NOTES
100	3600	208-230/460	405TS	MQP-76	94.1	243.3-220/110	1040	35	W 400TC	W 400TD	68
	3600	575	405TS	MPP-76	94.1	89	1040	35	W 400TC	W 400TD	
	1800	208-230/460	405T	MQP-77	95.4	248-224/112	1058	38	W 400TCP	W 400TDP	68, RB
	1800	575	405T	MPP-77	95.4	89.6	1058	38	W 400TCP	W 400TDP	68, RB
	1200	460	444T	MQP-78	95	122	1320	44.3	W 440TCP	W 440TDP	68, RB
	1200	575	444T	MPP-78	95	96	1320	44.3	W 440TCP	W 440TDP	RB
	900	460	445T	MQP-79	93.6	126	1373	44.3	W 440TC	W 440TD	68, RB
	900	575	445T	MPP-79	93.6	100.8	1373	44.3	W 440TC	W 440TD	RB
125	3600	460	444TS	MQP-81	95	140	1247	40.6	W 440TCP	W 440TDP	68
	3600	575	444TS	MPP-81	95	111	1247	40.6	W 440TCP	W 440TDP	
	1800	460	444T	MQP-82	95.4	145	1342	44.3	W 440TC	W 440TD	68, RB
	1800	575	444T	MPP-82	95.4	115	1342	44.3	W 440TC	W 440TC	RB
	1200	460	445T	MQP-83	95	147	1400	44.3	W 440TCP	W 440TDP	68, RB
	1200	575	445T	MPP-83	95	117.6	1400	44.3	W 440TCP	W 440TDP	RB
	900	460	447T	MQP-84	94.1	158	1680	47.8	W 440TC	W 440TD	68, RB
	900	575	447T	MPP-84	94.1	126.4	1680	47.8	W 440TC	W 440TD	RB
150	3600	460	445TS	MQP-86	95	166	1408	40.6	W 440TCP	W 440TDP	68
	3600	575	445TS	MPP-86	95	133	1408	40.6	W 440TCP	W 440TDP	RB
	1800	460	445T	MQP-87	95.8	171	1672	47.8	W 440TCP	W 440TDP	68, RB
	1800	575	445T	MPP-87	95.8	137	1672	47.8	W 440TCP	W 440TDP	RB
	1200	460	447T	MQP-88	95.8	173	1800	47.8	W 440TCP	W 440TDP	68, RB
	1200	575	447T	MPP-88	95.8	138	1800	47.8	W 440TCP	W 440TDP	RB
	900	460	449T	MQP-89	94.1	186	1800	52.8	W 440TC	W 440TD	68, RB
	900	575	449T	MPP-89	94.1	148.8	1800	52.8	W 440TC	W 440TD	RB
200	3600	460	447TS	MQP-96	95.4	222	2185	44.1	W 440TCP	W 440TDP	68
	3600	575	447TS	MPP-96	95.4	170	2185	44.1	W 440TCP	W 440TDP	
	1800	460	447T	MQP-97	96.2	220	2260	47.8	W 440TCP	W 440TDP	68, RB
	1800	575	447T	MPP-97	96.2	176	2260	47.8	W 440TCP	W 440TDP	RB
	1200	460	449T	MQP-98	95.8	220	3100	52.8	W 440TCP	W 440TDP	68, RB
	1200	575	449T	MPP-98	95.8	184	3100	52.8	W 440TCP	W 440TDP	RB
250	3600	460	449TS	MQP-101	95.8	266	2700	49.1	W 440TCP	W 440TDP	68
	3600	575	449TS	MPP-101	95.8	212.6	2700	49.1	W 440TCP	W 440TDP	
	1800	460	449T	MQP-102	96.2	275	3100	52.8	W 440TCP	W 440TDP	68, RB
	1800	575	449T	MPP-102	96.2	220	3100	52.8	W 440TCP	W 440TDP	68
300	3600	460	449TS	MQP-106	95.8	320	2900	49.1	W 440TCP	W 440TDP	68
	3600	575	449TS	MPP-106	95.8	256	2900	49.1	W 440TCP	W 440TDP	
	1800	460	449T	MQP-107	330	330	3220	52.8	W 440TCP	W 440TDP	68, RB
	1800	575	449T	MPP-107	96.2	264	3220	52.8	W 440TCP	W 440TDP	RB

Footnotes:

* **68** = Rated and Nameplated 60/50 Hertz
* **RB** = Roller Bearing Installed on DE

PREMIUM DESIGN B NEMA 12-12

ROLLED STEEL & CAST IRON CONSTRUCTION RIGID BASE

ODP OPEN DRIPROOF

Max Motion

Features:

- MG-1 Design B and MG-1 Part 31
- Meets or exceeds NEMA Premium Efficiencies
- IP23 enclosure
- Rated and Nameplated 60/50 Hertz 190/380-415 or 380-415 @ 1.0 SF
- Inverter Duty 10:1 Constant Torque, 20:1 Variable Torque 1.0 SF meets MG1 parts 31.4.4.2
- Class F Insulation
- 1.15 Service Factor
- F1 Standard Assembly, Reversible to F2 Assembly
- Provision to accept Drip Cover, See Accessories Page
- CSAus & CE Certified
- 36 Months Warranty

HP	RPM	VOLTS	FRAME	CAT NO.	CONSTRUCTION	NOM EFF.	F.L. AMPS	WT (Lbs)	"C" DIMENSION (Inch)	C-FACE KITS	D-FLANGE KITS	FOOT NOTES
1	3600	208-230/460	143T	MQOP-1	Rolled Steel	77	3.5-3.2/1.6	41	11.2	W 140TCO-6205	W 140TDO-6205	68
	3600	575	143T	MPOP-1	Rolled Steel	77	1.3	41	11.2	W 140TCO-6205	W 140TDO-6205	
	1800	208-230/460	143T	MQOP-2	Rolled Steel	85.5	3.5-3.2/1.5	47	11.2	W 140TCO-6205	W 140TDO-6205	68
	1800	575	143T	MPOP-2	Rolled Steel	85.5	1.3	47	12	W 140TCO-6205	W 140TDO-6205	
	1200	208-230/460	145T	MQOP-3	Rolled Steel	82.5	3.7-3.4/1.7	52	12	W 140TCO-6205	W 140TDO-6205	68
	1200	575	145T	MPOP-3	Rolled Steel	82.5	1.4	52	12	W 140TCO-6205	W 140TDO-6205	
1.5	3600	208-230/460	143T	MQOP-6	Rolled Steel	84	4.4-4/2	46	11.2	W 140TCO-6205	W 140TDO-6205	68
	3600	575	143T	MPOP-6	Rolled Steel	84	1.6	46	11.2	W 140TCO-6205	W 140TDO-6205	
	1800	208-230/460	145T	MQOP-7	Rolled Steel	86.5	5.1-4.6/2.3	55	12	W 140TCO-6205	W 140TDO-6205	68
	1800	575	145T	MPOP-7	Rolled Steel	86.5	1.9	55	12	W 140TCO-6205	W 140TDO-6205	
	1200	208-230/460	182T	MQOP-8	Rolled Steel	86.5	5.3-4.8/2.4	95	14.1	W 180TCO-6206	W 180TDO-6206	68
	1200	575	182T	MPOP-8	Rolled Steel	86.5	1.9	95	14.1	W 180TCO-6206	W 180TDO-6206	
2	3600	208-230/460	145T	MQOP-11	Rolled Steel	85.5	5.7-5.2/2.6	52	12	W 140TCO-6205	W 140TDO-6205	68
	3600	575	145T	MPOP-11	Rolled Steel	85.5	2.1	52	12	W 140TCO-6205	W 140TDO-6205	
	1800	208-230/460	145T	MQOP-12	Rolled Steel	86.5	6.6-6/3	56	12	W 140TCO-6205	W 140TDO-6205	68
	1800	575	145T	MPOP-12	Rolled Steel	86.5	2.4	56	12	W 140TCO-6205	W 140TDO-6205	
	1200	208-230/460	184T	MQOP-13	Rolled Steel	87.5	6.6-6/3	103	14.9	W 180TCO-6206	W 180TDO-6206	68
	1200	575	184T	MPOP-13	Rolled Steel	87.5	2.4	103	14.9	W 180TCO-6206	W 180TDO-6206	
3	3600	208-230/460	145T	MQOP-16	Rolled Steel	85.5	8.1-7.4/3.7	90	12	W 140TCO-6205	W 140TDO-6205	68
	3600	575	145T	MPOP-16	Rolled Steel	85.5	3	90	12	W 140TCO-6205	W 140TDO-6205	
	1800	208-230/460	182T	MQOP-17	Rolled Steel	89.5	9-8.2/4.1	97	14.1	W 180TCO-6206	W 180TDO-6206	68
	1800	575	182T	MPOP-17	Rolled Steel	89.5	3.3	97	14.1	W 180TCO-6206	W 180TDO-6206	
	1200	208-230/460	213T	MQOP-18	Rolled Steel	88.5	9.5-8.6/4.3	136	16.54	W 210TCO-6208	N/A	68
	1200	575	213T	MPOP-18	Rolled Steel	88.5	3.4	136	16.54	W 210TCO-6208	N/A	
5	3600	208-230/460	184T	MQOP-21	Rolled Steel	86.5	13.6-12.4/6.2	110	14.9	W 180TCO-6206	W 180TDO-6206	68
	3600	575	184T	MPOP-21	Rolled Steel	86.5	5	110	14.9	W 180TCO-6206	W 180TDO-6206	
	1800	208-230/460	184T	MQOP-22	Rolled Steel	89.5	14.7-13.4/6.7	112	14.9	W 180TCO-6206	W 180TDO-6206	68
	1800	575	184T	MPOP-22	Rolled Steel	89.5	5.4	112	14.9	W 180TCO-6206	W 180TDO-6206	
	1200	208-230/460	215T	MQOP-23	Rolled Steel	89.5	15.4-14/7	162	17.52	W 210TCO-6208	N/A	68
	1200	575	215T	MPOP-23	Rolled Steel	89.5	5.6	162	17.52	W 210TCO-6208	N/A	
7.5	3600	208-230/460	184T	MQOP-26	Rolled Steel	88.5	19.4-17.6/8.8	145	14.9	W 180TCO-6206	W 180TDO-6206	68
	3600	575	184T	MPOP-26	Rolled Steel	88.5	7	145	14.9	W 180TCO-6206	W 180TDO-6206	
	1800	208-230/460	213T	MQOP-27	Rolled Steel	91	21.1-19.2/9.6	150	16.54	W 210TCO-6208	N/A	68
	1800	575	213T	MPOP-27	Rolled Steel	91	7.7	150	16.54	W 210TCO-6208	N/A	
	1200	208-230/460	254T	MQOP-28	Cast Iron	90.2	22.9-20.8/10.4	272	22.15	W 250TCO-6309	W 250TDO-6309	68
	1200	575	254T	MPOP-28	Cast Iron	90.2	8.3	272	22.15	W 250TCO-6309	W 250TDO-6309	

Footnotes:

* **68** = Rated and Nameplated 60/50 Hertz

CHART CONTINUES ON NEXT PAGE

PREMIUM DESIGN B NEMA 12-12

ROLLED STEEL & CAST IRON CONSTRUCTION RIGID BASE

ODP OPEN DRIPROOF

CHART CONTINUED FROM PREVIOUS PAGE

HP	RPM	VOLTS	FRAME	CAT NO.	CONSTRUCTION	NOM EFF.	F.L. AMPS	WT (Lbs)	"C" DIMENSION (Inch)	C-FACE KITS	D-FLANGE KITS	FOOT NOTES
10	3600	208-230/460	215T	MQOP-31	Rolled Steel	89.5	28.2-25.6/12.8	167	17.52	W 210TCO-6208	N/A	68
	3600	575	215T	MPOP-31	Rolled Steel	89.5	10.2	167	17.52	W 210TCO-6208	N/A	
	1800	208-230/460	215T	MQOP-32	Rolled Steel	91.7	28.6-26/13	167	17.52	W 210TCO-6208	N/A	68
	1800	575	215T	MPOP-32	Rolled Steel	91.7	10.5	167	17.52	W 210TCO-6208	N/A	
	1200	208-230/460	256T	MQOP-33	Cast Iron	91.7	29.7-27/13.5	293	22.15	W 250TCO-6309	W 250TDO-6309	68
	1200	575	256T	MPOP-33	Cast Iron	91.7	10.8	293	22.15	W 250TCO-6309	W 250TDO-6309	
15	3600	208-230/460	215T	MQOP-36	Rolled Steel	90.2	41.8-38/19	286	17.52	W 210TCO-6208	N/A	68
	3600	575	215T	MPOP-36	Rolled Steel	90.2	15.5	286	17.52	W 210TCO-6208	N/A	
	1800	208-230/460	254T	MQOP-37	Cast Iron	93	40-36/18	297	22.15	W 250TCO-6309	W 250TDO-6309	68
	1800	575	254T	MPOP-37	Cast Iron	93	14.4	297	22.15	W 250TCO-6309	W 250TDO-6309	
	1200	208-230/460	284T	MQOP-38	Cast Iron	91.7	44-40/20	363	24.8	W 280TCO-6311	W 280TDO-6311	68
	1200	575	284T	MPOP-38	Cast Iron	91.7	16	363	24.8	W 280TCO-6311	W 280TDO-6311	
20	3600	208-230/460	254T	MQOP-41	Cast Iron	91	51-46/23	315	22.15	W 250TCO-6309	W 250TDO-6309	68
	3600	575	254T	MPOP-41	Cast Iron	91	18.5	315	22.15	W 250TCO-6309	W 250TDO-6309	
	1800	208-230/460	256T	MQOP-42	Cast Iron	93	53-48/24	315	22.15	W 250TCO-6309	W 250TDO-6309	68
	1800	575	256T	MPOP-42	Cast Iron	93	19.2	315	22.15	W 250TCO-6309	W 250TDO-6309	
	1200	208-230/460	284T	MQOP-43	Cast Iron	92.4	57-52/26	394	24.8	W 280TCO-6311	W 280TDO-6311	68
	1200	575	284T	MPOP-43	Cast Iron	92.4	21	394	24.8	W 280TCO-6311	W 280TDO-6311	
25	3600	208-230/460	256T	MQOP-46	Cast Iron	91.7	63-57/28.5	385	22.15	W 250TCO-6309	W 250TDO-6309	68
	3600	575	256T	MPOP-46	Cast Iron	91.7	23	385	22.15	W 250TCO-6309	W 250TDO-6309	
	1800	208-230/460	284T	MQOP-47	Cast Iron	93.6	66-60/30	392	24.8	W 280TCO-6311	W 280TDO-6311	68
	1800	575	284T	MPOP-47	Cast Iron	93.6	24	392	24.8	W 280TCO-6311	W 280TDO-6311	
	1200	208-230/460	324T	MQOP-48	Cast Iron	93	70-64/32	508	27.1	W 320TCO-6312	W 320TDO-6312	68
	1200	575	324T	MPOP-48	Cast Iron	93	26	508	27.1	W 320TCO-6312	W 320TDO-6312	
30	3600	208-230/460	284TS	MQOP-51	Cast Iron	91.7	77-70/35	409	23.43	W 280TCO-6311	W 280TDO-6311	68
	3600	575	284TS	MPOP-51	Cast Iron	91.7	28	409	23.43	W 280TCO-6311	W 280TDO-6311	
	1800	208-230/460	286T	MQOP-52	Cast Iron	94.1	77-70/35	418	24.8	W 280TCO-6311	W 280TDO-6311	68
	1800	575	286T	MPOP-52	Cast Iron	94.1	28	418	24.8	W 280TCO-6311	W 280TDO-6311	
	1200	208-230/460	326T	MQOP-53	Cast Iron	93.6	84-76/38	537	27.1	W 320TCO-6312	W 320TDO-6312	68
	1200	575	326T	MPOP-53	Cast Iron	93.6	30.5	537	27.1	W 320TCO-6312	W 320TDO-6312	
40	3600	208-230/460	286TS	MQOP-56	Cast Iron	92.4	99-90/45	510	23.43	W 280TCO-6311	W 280TDO-6311	68
	3600	575	286TS	MPOP-56	Cast Iron	92.4	36	510	23.43	W 280TCO-6311	W 280TDO-6311	
	1800	208-230/460	324T	MQOP-57	Cast Iron	94.1	106-96/48	519	27.1	W 320TCO-6312	W 320TDO-6312	68
	1800	575	324T	MPOP-57	Cast Iron	94.1	38.4	519	27.1	W 320TCO-6312	W 320TDO-6312	
	1200	208-230/460	364T	MQOP-58	Cast Iron	94.1	110-100/50	697	29.3	W 360TCO-6313	W 360TDO-6313	68
	1200	575	364T	MPOP-58	Cast Iron	94.1	40	697	29.3	W 360TCO-6313	W 360TDO-6313	
50	3600	208-230/460	324TS	MQOP-61	Cast Iron	93	122-110/55	548	25.6	W 320TCO-6312	W 320TDO-6312	68
	3600	575	324TS	MPOP-61	Cast Iron	93	44	548	25.6	W 320TCO-6312	W 320TDO-6312	
	1800	208-230/460	326T	MQOP-62	Cast Iron	94.5	130-118/59	594	27.1	W 320TCO-6312	W 320TDO-6312	68
	1800	575	326T	MPOP-62	Cast Iron	94.5	48	594	27.1	W 320TCO-6312	W 320TDO-6312	
	1200	208-230/460	365T	MQOP-63	Cast Iron	94.1	139-126/63	752	29.3	W 360TCO-6313	W 360TDO-6313	68
	1200	575	365T	MPOP-63	Cast Iron	94.1	50	752	29.3	W 360TCO-6313	W 360TDO-6313	
60	3600	208-230/460	326TS	MQOP-66	Cast Iron	93.6	145-132/66	704	25.6	W 320TCO-6312	W 320TDO-6312	68
	3600	575	326TS	MPOP-66	Cast Iron	93.6	52.8	704	25.6	W 320TCO-6312	W 320TDO-6312	
	1800	208-230/460	364T	MQOP-67	Cast Iron	95	154-140/70	766	29.3	W 360TCO-6313	W 360TDO-6313	68
	1800	575	364T	MPOP-67	Cast Iron	95	56	766	29.3	W 360TCO-6313	W 360TDO-6313	
	1200	208-230/460	404T	MQOP-68	Cast Iron	94.5	154-140/70	1000	33.3	W 400TCO-6318	W 400TDO-6318	68, RB
	1200	575	404T	MPOP-68	Cast Iron	94.5	56	1000	33.3	W 400TCO-6318	W 400TDO-6318	RB

Footnotes:

* **68** = Rated and Nameplated 60/50 Hertz
* **RB** = Roller Bearing Installed on DE

CHART CONTINUES ON NEXT PAGE

PREMIUM DESIGN B NEMA 12-12

ROLLED STEEL & CAST IRON CONSTRUCTION RIGID BASE

ODP OPEN DRIPROOF

Max Motion

CHART CONTINUED FROM PREVIOUS PAGE

HP	RPM	VOLTS	FRAME	CAT NO.	CONSTRUCTION	NOM EFF.	F.L. AMPS	WT (Lbs)	"C" DIMENSION (Inch)	C-FACE KITS	D-FLANGE KITS	FOOT NOTES
75	3600	208-230/460	364TS	MQOP-71	Cast Iron	93.6	183-166/83	766	27.17	W 360TCO-6313	W 360TDO-6313	68
	3600	575	364TS	MPOP-71	Cast Iron	93.6	67	766	27.17	W 360TCO-6313	W 360TDO-6313	
	1800	208-230/460	365T	MQOP-72	Cast Iron	95	191-174/87	783	29.3	W 360TCO-6313	W 360TDO-6313	68
	1800	575	365T	MPOP-72	Cast Iron	95	70	783	29.3	W 360TCO-6313	W 360TDO-6313	
	1200	208-230/460	405T	MQOP-73	Cast Iron	94.5	192-174/87	1120	33.3	W 400TCO-6318	W 400TDO-6318	68, RB
	1200	575	405T	MPOP-73	Cast Iron	94.5	70	1120	33.3	W 400TCO-6318	W 400TDO-6318	RB
100	3600	208-230/460	365TS	MQOP-76	Cast Iron	93.6	245-222/112	1040	27.17	W 360TCO-6313	W 360TDO-6313	68
	3600	575	365TS	MPOP-76	Cast Iron	93.6	90	1040	27.17	W 360TCO-6313	W 360TDO-6313	
	1800	208-230/460	404T	MQOP-77	Cast Iron	95.4	246-224/112	1058	33.3	W 400TCO-6318	W 400TDO-6318	68, RB
	1800	575	404T	MPOP-77	Cast Iron	95.4	90	1058	33.3	W 400TCO-6318	W 400TDO-6318	RB
	1200	208-230/460	444T	MQOP-78	Cast Iron	95	257-234/117	1320	39.5	W 440TCO-6319	W 440TDO-6319	68, RB
	1200	575	444T	MPOP-78	Cast Iron	95	94	1320	39.5	W 440TCO-6319	W 440TDO-6319	RB
125	3600	460	404TS	MQOP-81	Cast Iron	94.1	138	1247	33.3	W 400TSCO-6314	W 400TSCO-6314	68
	3600	575	404TS	MPOP-81	Cast Iron	94.1	110	1247	33.3	W 400TSCO-6314	W 400TSCO-6314	
	1800	460	405T	MQOP-82	Cast Iron	95.4	141	1342	33.3	W 400TCO-6318	W 400TDO-6318	68, RB
	1800	575	405T	MPOP-82	Cast Iron	95.4	113	1342	33.3	W 400TCO-6318	W 400TDO-6318	RB
	1200	460	445T	MQOP-83	Cast Iron	95	146	1400	39.5	W 440TCO-6319	W 440TDO-6319	68, RB
	1200	575	445T	MPOP-83	Cast Iron	95	118	1400	39.5	W 440TCO-6319	W 440TDO-6319	RB
150	3600	460	405TS	MQOP-86	Cast Iron	94.1	166	1408	33.3	W 400TSCO-6314	W 400TSCO-6314	68
	3600	575	405TS	MPOP-86	Cast Iron	94.1	132	1408	33.3	W 400TSCO-6314	W 400TSCO-6314	
	1800	460	444T	MQOP-87	Cast Iron	95.8	167	1672	39.5	W 440TCO-6319	W 440TDO-6319	68, RB
	1800	575	444T	MPOP-87	Cast Iron	95.8	134	1672	39.5	W 440TCO-6319	W 440TDO-6319	RB
	1200	460	447T	MQOP-88	Cast Iron	95.4	173	1800	43	W 440TCO-6319	W 440TDO-6319	68, RB
	1200	575	447T	MPOP-88	Cast Iron	95.4	138	1800	43	W 440TCO-6319	W 440TDO-6319	RB
200	3600	460	444TS	MQOP-96	Cast Iron	95	219	1584	34.75	W 440TSCO-6314	W 440TSDO-6314	68
	3600	575	444TS	MPOP-96	Cast Iron	95	175	1584	34.75	W 440TSCO-6314	W 440TSDO-6314	
	1800	460	445T	MQOP-97	Cast Iron	95.8	220	1782	39.5	W 440TCO-6319	W 440TDO-6319	68, RB
	1800	575	445T	MPOP-97	Cast Iron	95.8	176	1782	39.5	W 440TCO-6319	W 440TDO-6319	RB
	1200	460	449T	MQOP-98	Cast Iron	95.4	230	2100	48	W 440TCO-6319	W 440TDO-6319	68, RB
	1200	575	449T	MPOP-98	Cast Iron	95.4	185	2100	48	W 440TCO-6319	W 440TDO-6319	RB
250	3600	460	445TS	MQOP-101	Cast Iron	95	270	1870	34.75	W 440TSCO-6314	W 440TSDO-6314	68
	3600	575	445TS	MPOP-101	Cast Iron	95	216	1870	34.75	W 440TSCO-6314	W 440TSDO-6314	
	1800	460	447T	MQOP-102	Cast Iron	95.8	280	2150	43	W 440TCO-6319	W 440TDO-6319	68, RB
	1800	575	447T	MPOP-102	Cast Iron	95.8	224	2150	43	W 440TCO-6319	W 440TDO-6319	RB
300	3600	460	447TS	MQOP-106	Cast Iron	95.4	322	2002	38.25	W 440TSCO-6314	W 440TSDO-6314	68
	3600	575	447TS	MPOP-106	Cast Iron	95.4	258	2002	38.25	W 440TSCO-6314	W 440TSDO-6314	
	1800	460	449T	MQOP-107	Cast Iron	95.8	335	2220	48	W 440TCO-6319	W 440TDO-6319	68, RB
	1800	575	449T	MPOP-107	Cast Iron	95.8	260	2220	48	W 440TCO-6319	W 440TDO-6319	RB
350	3600	460	449TS	MQOP-111	Cast Iron	95.4	373	2400	43.25	W 440TSCO-6314	W 440TSDO-6314	68
	3600	575	449TS	MPOP-111	Cast Iron	95.4	299	2400	43.25	W 440TSCO-6314	W 440TSDO-6314	

Footnotes:

* **68** = Rated and Nameplated 60/50 Hertz
* **RB** = Roller Bearing Installed on DE

Please visit **www.mep.ca** for more technical information

PREMIUM DESIGN B NEMA 12-12

CLOSE COUPLED PUMP MOTORS JM STYLE | CAST IRON

CONSTRUCTION RIGID BASE TEFC TOTALLY ENCLOSED FAN COOLED

Max Motion

Features:

- MG-1 Design B and MG-1 Part 31
- Meets or exceeds NEMA Premium Efficiencies
- Factory Certified Division 2, Class I Groups A, B, C, D, Class II Groups F&G
- Meets Temperature Code T2B
- IP55 enclosure
- Rated and Nameplated 60/50 Hertz 190/380-415 @ 1.0 SF
- Inverter Duty 10:1 Constant Torque, 20:1 Variable Torque 1.0 SF meets MG1 parts 31.4.4.2
- 1.25 Service Factor
- Class F Insulation
- F1 Standard Assembly, Reversible to F2 Assembly
- Provision to accept Drip Cover, See Accessories Page
- CSAus & CE Certified
- 36 Months Warranty

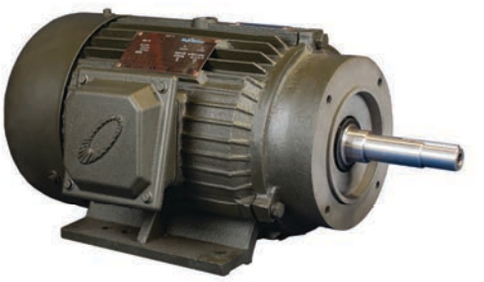

HP	RPM	VOLTS	FRAME	CAT NO.	NOM EFF.	F.L. AMPS	WT (Lbs)	"C" DIMENSION (Inch)	FOOT NOTES
1	1800	208-230/460	143JM	JMQP-2	85.5	3.2-3/1.5	47	16.23	68
	1800	575	143JM	JMPP-2	85.5	1.2	47	16.23	
	1200	208-230/460	145JM	JMQP-3	82.5	4.1-3.7/1.85	52	17.23	68
	1200	575	145JM	JMPP-3	82.5	1.45	52	17.23	
1.5	1800	208-230/460	145JM	JMQP-7	86.5	5.1-4.6/2.3	55	17.23	68
	1800	575	145JM	JMPP-7	86.5	1.9	55	17.23	
	1200	208-230/460	182JM	JMQP-8	87.5	5.2-4.8/2.4	95	19.48	68
	1200	575	182JM	JMPP-8	87.5	1.9	95	19.48	
2	3600	208-230/460	145JM	JMQP-11	85.5	5.8-5.3/2.65	52	17.23	68
	3600	575	145JM	JMPP-11	85.5	2.05	52	17.23	
	1800	208-230/460	145JM	JMQP-12	86.5	6.6-6/3	56	17.23	68
	1800	575	145JM	JMPP-12	96.5	2.4	56	17.23	
	1200	208-230/460	184JM	JMQP-13	88.5	6.6-6/3	103	19.48	68
	1200	575	184JM	JMPP-13	88.5	2.4	103	19.48	
3	3600	208-230/460	145JM	JMQP-16S	86.5	8.84-8/4	90	17.23	68
	3600	575	145JM	JMPP-16S	86.5	3.2	90	17.23	
	3600	208-230/460	182JM	JMQP-16	86.5	8.4-7.6/3.8	95	18.48	68
	3600	575	182JM	JMPP-16	86.5	3	95	18.48	
	1800	208-230/460	182JM	JMQP-17	89.5	8.2-7.6/3.8	97	18.48	68
	1800	575	182JM	JMPP-17	89.5	3	97	18.48	
	1200	208-230/460	213JM	JMQP-18	89.5	9.2-8.4/4.2	136	20.78	68
	1200	575	213JM	JMPP-18	89.5	3.4	136	20.78	
5	3600	208-230/460	184JM	JMQP-21	88.5	13-11.6/5.8	110	19.48	68
	3600	575	184JM	JMPP-21	88.5	4.6	110	19.48	
	1800	208-230/460	184JM	JMQP-22	89.5	14-13.6/6.8	112	19.48	68
	1800	575	184JM	JMPP-22	89.5	5.4	112	19.48	
	1200	208-230/460	215JM	JMQP-23	89.5	15.6-14.2/7.1	162	22.28	68
	1200	575	215JM	JMPP-23	89.5	5.68	162	22.28	

CHART CONTINUES ON NEXT PAGE

Footnotes:

* **68** = Rated and Nameplated 60/50 Hertz

CHART CONTINUED FROM PREVIOUS PAGE

HP	RPM	VOLTS	FRAME	CAT NO.	NOM EFF.	F.L. AMPS	WT (Lbs)	"C" DIMENSION (Inch)	FOOT NOTES
7.5	3600	208-230/460	184JM	JMQP-26S	89.5	18.8-17.6/8.8	134	19.48	68
	3600	575	184JM	JMPP-26S	89.5	7	134	19.48	
	3600	208-230/460	213JM	JMQP-26	89.5	18.8-17.6/8.5	145	20.78	68
	3600	575	213JM	JMPP-26	89.5	7	145	20.78	
	1800	208-230/460	213JM	JMQP-27	91.7	19.8-18.4/9.2	150	20.78	68
	1800	575	213JM	JMPP-27	91.7	7.4	150	20.78	
	1200	208-230/460	254JM	JMQP-28	91	21-19.6/9.5	272	24.7	68
	1200	575	254JM	JMPP-28	91	7.8	272	24.7	
10	3600	208-230/460	215JM	JMQP-31	90.2	23.9-22.8/11.4	167	22.28	68
	3600	575	215JM	JMPP-31	90.2	9.1	167	22.28	
	1800	208-230/460	215JM	JMQP-32	91.7	26-24/12	167	22.28	68
	1800	575	215JM	JMPP-32	91.7	9.6	167	22.28	
	1200	208-230/460	256JM	JMQP-33	91	27.2-25.6/12.8	293	26.5	68
	1200	575	256JM	JMPP-33	91	10.2	293	26.5	
15	3600	208-230/460	215JM	JMQP-36S	91	36.2-34.4/17.2	162	22.28	68
	3600	575	215JM	JMPP-36S	91	13.8	162	22.28	
	3600	208-230/460	254JM	JMQP-36	91	36.2-34.4/17.2	286	24.7	68
	3600	575	254JM	JMPP-36	91	13.8	286	24.7	
	1800	208-230/460	254JM	JMQP-37	92.4	37.2-36.4/18.2	297	24.7	68
	1800	575	254JM	JMPP-37	92.4	14.6	297	24.7	
	1200	208-230/460	284JM	JMQP-38	91.7	41-38/19	363	27.47	68
	1200	575	284JM	JMPP-38	91.7	15.2	363	27.47	
20	3600	208-230/460	256JM	JMQP-41	91	48.5-46/23	315	26.5	68
	3600	575	256JM	JMPP-41	91	18.4	315	26.5	
	1800	208-230/460	256JM	JMQP-42	93	51.8-48.4/24.2	315	26.5	68
	1800	575	256JM	JMPP-42	93	19.1	315	26.5	
25	3600	208-230/460	256JM	JMQP-46S	91.7	60-55/27.5	365	26.5	68
	3600	575	256JM	JMPP-46S	91.7	22	365	26.5	
	3600	208-230/460	284JM	JMQP-46	91.7	61-57/28.5	385	24.47	68
	3600	575	284JM	JMPP-46	91.7	22.8	385	24.47	
	1800	208-230/460	284JM	JMQP-47	93.6	65-60/30	392	24.47	68
	1800	575	284JM	JMPP-47	93.6	24	392	24.47	
30	3600	208-230/460	286JM	JMQP-51	91.7	74-69/34.5	409	24.47	68
	3600	575	286JM	JMPP-51	91.7	18.4	409	24.47	
	1800	208-230/460	286JM	JMQP-52	93.6	76-70.6/35.3	418	28.97	68
	1800	575	286JM	JMPP-52	93.6	28.2	418	28.97	
40	3600	208-230/460	286JM	JMQP-56S	92.4	95-90/45	435	28.97	68
	3600	575	286JM	JMPP-56S	92.4	36	435	28.97	
	3600	208-230/460	324JM	JMQP-56	92.4	94.9-91/45.5	486	30.05	68
	3600	575	324JM	JMPP-56	92.4	36.4	486	30.05	
	1800	208-230/460	324JM	JMQP-57	94.1	100-93.2/46.6	519	30.05	68
	1800	575	324JM	JMPP-57	94.1	37.3	519	30.05	
50	3600	208-230/460	326JM	JMQP-61	93	124-116.2/58.1	548	31.55	68
	3600	575	326JM	JMPP-61	93	46.4	548	31.55	

Footnotes:

* **68** = Rated and Nameplated 60/50 Hertz

PREMIUM DESIGN B NEMA 12-12

CLOSE COUPLED PUMP MOTORS JP STYLE | CAST IRON CONSTRUCTION RIGID BASE TEFC TOTALLY ENCLOSED FAN COOLED

Features:

- MG-1 Design B and MG-1 Part 31
- Meets or exceeds NEMA Premium Efficiencies
- Factory Certified Division 2, Class I Groups A, B, C, D, Class II Groups F&G
- Meets Temperature Code T2B
- IP55 enclosure
- Rated and Nameplated 60/50 Hertz 190/380-415 @ 1.0 SF
- Inverter Duty 10:1 Constant Torque, 20:1 Variable Torque 1.0 SF meets MG1 parts 31.4.4.2
- 1.25 Service Factor
- Class F Insulation
- F1 Standard Assembly, Reversible to F2 Assembly
- Provision to accept Drip Cover, See Accessories Page
- CSAus & CE Certified
- 36 Months Warranty

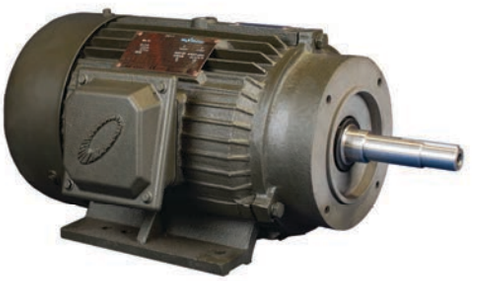

HP	RPM	VOLTS	FRAME	CAT NO.	NOM EFF.	F.L. AMPS	WT (Lbs)	"C" DIMENSION (Inch)	FOOT NOTES
2	1800	208-230/460	145JP	JPQP-12	86.5	6.6-6/3	56	20.30	68
	1800	575	145JP	JPPP-12	86.5	2.4	56	20.30	
3	1800	208-230/460	182JP	JPQP-17	89.5	8.2-7.6/3.8	97	21.55	68
	1800	575	182JP	JPPP-17	89.5	3	97	21.55	68
5	1800	208-230/460	184JP	JPQP-22	89.5	14-13.6/6.8	112	22.55	68
	1800	575	184JP	JPPP-22	89.5	5.4	112	22.55	
7.5	1800	208-230/460	213JP	JPQP-27	91.7	19.8-18.4/9.2	150	24.65	68
	1800	575	213JP	JPPP-27	91.7	7.4	150	24.65	
10	3600	208-230/460	215JP	JPQP-31	90.2	23.9-22.8/11.4	167	26.15	68
	3600	575	215JP	JPPP-31	90.2	9.1	167	26.15	
	1800	208-230/460	215JP	JPQP-32	91.7	26-24/12	167	26.15	68
	1800	575	215JP	JPPP-32	91.7	9.6	167	26.15	
15	3600	208-230/460	215JP	JPQP-36S	91	36.2-34.4/17.2	162	26.15	68
	3600	575	215JP	JPPP-36S	91	13.8	162	26.15	
	3600	208-230/460	254JP	JPQP-36	91	36.2-34.4/17.2	286	27.58	68
	3600	575	254JP	JPPP-36	91	13.8	286	27.58	

Footnotes:

* **68 =** Rated and Nameplated 60/50 Hertz

PREMIUM DESIGN B NEMA 12-12

304 GRADE STAINLESS STEEL TENV TOTALLY ENCLOSED

NON-VENTILTED & TEFC TOTALLY ENCLOSED FAN COOLED

Features:

- MG-1 Design B and MG-1 Part 31
- Meets or exceeds MEPS (Minimum Efficieny Performance Standards) as described by US Department of Energy in docket 10CFR431 and Natural Resources Canada's Amendment 14
- IP69K enclosure
- Rated and Nameplated 60/50 Hertz 190/380 @ 1.0 SF
- Inverter Duty 10:1 Constant Torque, 20:1 Variable Torque @ 1.0 SF meets MG1 parts 31.4.4.2
- Class F Insulation
- CSAus & CE Certified
- 18 Months Warranty

HP	RPM	VOLTS	FRAME	CAT NO.	ENCLOSURE	BASE	NOM EFF.	F.L. AMPS	WT (Lbs)	"C" DIMENSION (Inch)	FOOT NOTES
0.33	1800	208-230/460	56C	MQS-134L	TENV	Rigid	73.4	1.22-1.1/.55	28	9.8	68
	1800	575	56C	MPS-134L	TENV	Rigid	73.4	0.44	28	9.8	
	1800	208-230/460	56C	MQS-134RB	TENV	Round body	73.4	1.22-1.1/.55	28	9.8	68
	1800	575	56C	MPS-134RB	TENV	Round body	73.4	0.44	28	9.8	
	1800	208-230/460	56C	MQS-134LFC	TEFC	Rigid	73.4	1.22-1.1/.55	28	11.59	68
	1800	575	56C	MPS-134LFC	TEFC	Rigid	73.4	0.44	28	11.59	
	1800	208-230/460	56C	MQS-134RBFC	TEFC	Round body	73.4	1.22-1.1/.55	28	11.59	68
	1800	575	56C	MPS-134RBFC	TEFC	Round body	73.4	0.44	28	11.59	
0.50	3600	208-230/460	56C	MQS-122L	TENV	Rigid	73.4	1.66-1.5/.75	29	9.8	68
	3600	575	56C	MPS-122L	TENV	Rigid	73.4	0.6	29	9.8	
	3600	208-230/460	56C	MQS-122RB	TENV	Round body	73.4	1.66-1.5/.75	29	9.8	68
	3600	575	56C	MPS-122RB	TENV	Round body	73.4	0.6	29	9.8	
	1800	208-230/460	56C	MQS-124L	TENV	Rigid	78.2	1.9-1.72/.86	31	9.8	68
	1800	575	56C	MPS-124L	TENV	Rigid	78.2	0.688	31	9.8	
	1800	208-230/460	56C	MQS-124RB	TENV	Round body	78.2	1.9-1.72/.86	31	9.8	68
	1800	575	56C	MPS-124RB	TENV	Round body	78.2	0.688	31	9.8	
	1800	208-230/460	56C	MQS-124LFC	TEFC	Rigid	78.2	1.9-1.72/.86	31	11.59	68
	1800	575	56C	MPS-124LFC	TEFC	Rigid	78.2	0.688	31	11.59	
	1800	208-230/460	56C	MQS-124RBFC	TEFC	Round body	78.2	1.9-1.72/.86	31	11.59	68
	1800	575	56C	MPS-124RBFC	TEFC	Round body	78.2	0.688	31	11.59	
	1200	208-230/460	56C	MQS-126L	TENV	Rigid	75.3	1.99-1.8/.9	31	9.8	68
	1200	575	56C	MPS-126L	TENV	Rigid	75.3	75.3	31	9.8	
	1200	208-230/460	56C	MQS-126RB	TENV	Round body	75.3	1.99-1.8/.9	31	9.8	68
	1200	575	56C	MPS-126RB	TENV	Round body	75.3	75.3	31	9.8	
0.75	3600	208-230/460	56C	MQS-342L	TENV	Rigid	76.8	2.65-2.4/1.2	33	10.78	68
	3600	575	56C	MPS-342L	TENV	Rigid	76.8	0.96	33	10.78	
	3600	208-230/460	56C	MQS-342RB	TENV	Round body	76.8	2.65-2.4/1.2	33	10.78	68
	3600	575	56C	MPS-342RB	TENV	Round body	76.8	0.96	33	10.78	
	1800	208-230/460	56C	MQS-344L	TENV	Rigid	81.1	2.65-2.4/1.2	33	10.78	68
	1800	575	56C	MPS-344L	TENV	Rigid	81.1	0.96	33	10.78	
	1800	208-230/460	56C	MQS-344RB	TENV	Round body	81.1	2.65-2.4/1.2	33	10.78	68
	1800	575	56C	MPS-344RB	TENV	Round body	81.1	0.96	33	10.78	

Footnotes:

* **68 =** Rated and Nameplated 60/50 Hertz

CHART CONTINUES ON NEXT PAGE

CHART CONTINUED FROM PREVIOUS PAGE

HP	RPM	VOLTS	FRAME	CAT NO.	ENCLOSURE	BASE	NOM EFF.	F.L. AMPS	WT (Lbs)	"C" DIMENSION (Inch)	FOOT NOTES
0.75	1800	208-230/460	56C	MQS-344LFC	TEFC	Rigid	81.1	2.65/2.4/1.2	33	12.57	68
	1800	575	56C	MPS-344LFC	TEFC	Rigid	81.1	0.96	33	12.57	
	1800	208-230/460	56C	MQS-344RBFC	TEFC	Round body	81.1	2.65/2.4/1.2	33	12.57	68
	1800	575	56C	MPS-344RBFC	TEFC	Round body	81.1	0.96	33	12.57	
	1200	208-230/460	56C	MQS-346L	TENV	Rigid	81.7	2.88-2.6/1.3	34	10.78	68
	1200	575	56C	MPS-346L	TENV	Rigid	81.7	1.04	34	10.78	
	1200	208-230/460	56C	MQS-346RB	TENV	Round body	81.7	2.88-2.6/1.3	34	10.78	68
	1200	575	56C	MPS-346RB	TENV	Round body	81.7	1.04	34	10.78	
1	3600	208-230/460	56C	MQSP-102L	TEFC	Rigid	77	3.1-2.8/1.4	35	12.57	68
	3600	575	56C	MPSP-102L	TEFC	Rigid	77	1.12	35	12.57	
	3600	208-230/460	56C	MQSP-102RB	TEFC	Round body	77	3.1-2.8/1.4	35	12.57	68
	3600	575	56C	MPSP-102RB	TEFC	Round body	77	1.12	35	12.57	
	3600	208-230/460	56C	MQSP-102LNV	TENV	Rigid	77	3.1-2.8/1.4	35	10.78	68
	3600	575	56C	MPSP-102LNV	TENV	Rigid	77	1.12	35	10.78	
	3600	208-230/460	56C	MQSP-102RBNV	TENV	Round body	77	3.1-2.8/1.4	35	10.78	68
	3600	575	56C	MPSP-102RBNV	TENV	Round body	77	1.12	35	10.78	
	1800	208-230/460	56C	MQSP-104L	TEFC	Rigid	86.7	3.36-3.01/1.52	36	12.57	68
	1800	575	56C	MPSP-104L	TEFC	Rigid	86.7	1.216	36	12.57	
	1800	208-230/460	56C	MQSP-104RB	TEFC	Round body	86.7	3.36-3.01/1.52	36	12.57	68
	1800	575	56C	MPSP-104RB	TEFC	Round body	86.7	1.216	36	12.57	
	1800	208-230/460	56C	MQSP-104LNV	TENV	Rigid	86.7	3.36-3.01/1.52	36	10.78	68
	1800	575	56C	MPSP-104LNV	TENV	Rigid	86.7	1.216	36	10.78	
	1800	208-230/460	143TC	MQSP-104RBNV	TENV	Round body	86.7	3.36-3.01/1.52	36	10.78	68
	1800	575	143TC	MPSP-104RBNV	TENV	Round body	86.7	1.216	36	10.78	
	1800	208-230/460	56C	MQSP-104TL	TEFC	Rigid	86.7	3.36-3.01/1.52	36	12.63	68
	1800	575	56C	MPSP-104TL	TEFC	Rigid	86.7	1.216	36	12.63	
	1800	208-230/460	143TC	MQSP-104TLNV	TENV	Rigid	86.7	3.36-3.01/1.52	36	10.84	68
	1800	575	143TC	MPSP-104TLNV	TENV	Rigid	86.7	1.216	36	10.84	
	1200	208-230/460	56C	MQSP-106L	TEFC	Rigid	82.5	3.87-3.5/1.75	36	12.57	68
	1200	575	56C	MPSP-106L	TEFC	Rigid	82.5	1.4	36	12.57	
	1200	208-230/460	56C	MQSP-106RB	TEFC	Round body	82.5	3.87-3.5/1.75	36	12.57	68
	1200	575	56C	MPSP-106RB	TEFC	Round body	82.5	1.4	36	12.57	
	1200	208-230/460	143TC	MQSP-106TL	TEFC	Rigid	82.5	3.87-3.5/1.75	42	13.81	68
	1200	575	143TC	MPSP-106TL	TEFC	Rigid	82.5	1.4	42	13.81	
1.5	3600	208-230/460	56C	MQSP-152L	TEFC	Rigid	84	4.64-4.2/2.1	28	12.57	68
	3600	575	56C	MPSP-152L	TEFC	Rigid	84	1.68	28	12.57	
	3600	208-230/460	56C	MQSP-152RB	TEFC	Round body	84	4.64-4.2/2.1	28	12.57	68
	3600	575	56C	MPSP-152RB	TEFC	Round body	84	1.68	28	12.57	
	3600	208-230/460	56C	MQSP-152LNV	TENV	Rigid	84	4.64-4.2/2.1	28	11.96	68
	3600	575	56C	MPSP-152LNV	TENV	Rigid	84	1.68	28	11.96	
	3600	208-230/460	56C	MQSP-152RBNV	TENV	Round body	84	4.64-4.2/2.1	28	11.96	68
	3600	575	56C	MPSP-152RBNV	TENV	Round body	84	1.68	28	11.96	
	3600	208-230/460	143TC	MQSP-152TL	TEFC	Rigid	84	4.42-2.21/1.92	39	12.63	68
	3600	575	143TC	MPSP-152TL	TEFC	Rigid	84	1.6	39	12.63	
	3600	208-230/460	143TC	MQSP-152TLNV	TENV	Rigid	84	4.42-2.21/1.92	39	12.02	68
	3600	575	143TC	MPSP-152TLNV	TENV	Rigid	84	1.6	39	12.02	

Footnotes:

* **68** = Rated and Nameplated 60/50 Hertz

CHART CONTINUES ON NEXT PAGE

CHART CONTINUED FROM PREVIOUS PAGE

HP	RPM	VOLTS	FRAME	CAT NO.	ENCLOSURE	BASE	NOM EFF.	F.L. AMPS	WT (Lbs)	"C" DIMENSION (Inch)	FOOT NOTES
1.5	1800	208-230/460	56C	MQSP-154L	TEFC	Rigid	86.5	4.87-4.4/2.2	36	12.57	68
	1800	575	56C	MPSP-154L	TEFC	Rigid	86.5	1.76	36	12.57	
	1800	208-230/460	56C	MQSP-154RB	TEFC	Round body	86.5	4.87-4.4/2.2	36	12.57	68
	1800	575	56C	MPSP-154RB	TEFC	Round body	86.5	1.76	36	12.57	
	1800	208-230/460	56C	MQSP-154LNV	TENV	Rigid	86.5	4.87-4.4/2.2	36	11.96	68
	1800	575	56C	MPSP-154LNV	TENV	Rigid	86.5	1.76	36	11.96	
	1800	208-230/460	56C	MQSP-154RBNV	TENV	Round body	86.5	4.87-4.4/2.2	36	11.96	68
	1800	575	56C	MPSP-154RBNV	TENV	Round body	86.5	1.76	36	11.96	
	1800	208-230/460	145TC	MQSP-154TL	TEFC	Rigid	86.5	4.87-4.4/2.2	42	13.81	68
	1800	575	145TC	MPSP-154TL	TEFC	Rigid	86.5	1.76	42	13.81	
	1800	208-230/460	145TC	MQSP-154TLNV	TENV	Rigid	86.5	4.87-4.4/2.2	42	12.02	68
	1800	575	145TC	MPSP-154TLNV	TENV	Rigid	86.5	1.76	42	12.02	
	1200	208-230/460	56C	MQSP-156L	TEFC	Rigid	87.5	5.42-4.9/2.45	36	13.75	68
	1200	575	56C	MPSP-156L	TEFC	Rigid	87.5	1.96	36	13.75	
	1200	208-230/460	56C	MQSP-156RB	TEFC	Round body	87.5	5.42-4.9/2.45	36	13.75	68
	1200	575	56C	MPSP-156RB	TEFC	Round body	87.5	1.96	36	13.75	
	1200	208-230/460	182TC	MQSP-156TL	TEFC	Rigid	87.5	5.42-4.9/2.45	79	17	68
	1200	575	182TC	MPSP-156TL	TEFC	Rigid	87.5	1.96	79	17	
2	3600	208-230/460	145TC	MQSP-202TL	TEFC	Rigid	85.5	5.31-4.8-2.4	46	13.81	68
	3600	575	145TC	MPSP-202TL	TEFC	Rigid	85.5	1.92	46	13.81	
	3600	208-230/460	145TC	MQSP-202TLNV	TENV	Rigid	85.5	5.31-4.8-2.4	46	13.81	68
	3600	575	145TC	MPSP-202TLNV	TENV	Rigid	85.5	1.92	46	13.81	
	1800	208-230/460	56C	MQSP-204L	TEFC	Rigid	86.5	6.41-5.8/2.7	36	13.75	68
	1800	575	56C	MPSP-204L	TEFC	Rigid	86.5	2.16	36	13.75	
	1800	208-230/460	56C	MQSP-204RB	TEFC	Round body	86.5	6.41-5.8/2.7	36	13.75	68
	1800	575	56C	MPSP-204RB	TEFC	Round body	86.5	2.16	36	13.75	
	1800	208-230/460	56C	MQSP-204LNV	TENV	Rigid	86.5	6.41-5.8/2.7	36	13.75	68
	1800	575	56C	MPSP-204LNV	TENV	Rigid	86.5	2.16	36	13.75	
	1800	208-230/460	56C	MQSP-204RBNV	TENV	Round body	86.5	6.41-5.8/2.7	36	13.75	68
	1800	575	56C	MPSP-204RBNV	TENV	Round body	86.5	2.16	36	13.75	
	1800	208-230/460	145TC	MQSP-204TL	TEFC	Rigid	86.5	5.97-5.4/2.7	49	13.81	68
	1800	575	145TC	MPSP-204TL	TEFC	Rigid	86.5	2.16	49	13.81	
	1800	208-230/460	145TC	MQSP-204TLNV	TENV	Rigid	86.5	5.97-5.4/2.7	49	13.81	68
	1800	575	145TC	MPSP-204TLNV	TENV	Rigid	86.5	2.16	49	13.81	
	1800	575	145TC	MPSP-204TRB	TEFC	Round body	86.5	2.16	49	13.81	68
	1200	208-230/460	184TC	MQSP-206TL	TEFC	Rigid	88.5	6.86-6.2/3.1	95	17	68
	1200	575	184TC	MPSP-206TL	TEFC	Rigid	88.5	2.48	95	17	
3	3600	208-230/460	145TC	MQSP-302TSL	TEFC	Rigid	86.5	8.96-8.1/4.05	81	15.58	68
	3600	575	145TC	MPSP-302TSL	TEFC	Rigid	86.5	3.24	81	15.58	
	3600	208-230/460	182TC	MQSP-302TL	TEFC	Rigid	86.5	8.96-8.1/4.05	81	17.00	68
	3600	575	184TC	MPSP-302TL	TEFC	Rigid	86.5	3.24	81	17.00	
	3600	208-230/460	182TC	MQSP-302TLNV	TENV	Rigid	86.5	8.96-8.1/4.05	81	14.70	68
	3600	575	184TC	MPSP-302TLNV	TENV	Rigid	86.5	3.24	81	14.70	

Footnotes:

* **68** = Rated and Nameplated 60/50 Hertz

CHART CONTINUES ON NEXT PAGE

CHART CONTINUED FROM PREVIOUS PAGE

HP	RPM	VOLTS	FRAME	CAT NO.	ENCLOSURE	BASE	NOM EFF.	F.L. AMPS	WT (Lbs)	"C" DIMENSION (Inch)	FOOT NOTES
3	1800	208-230/460	56C	MQSP-304TL-56C	TEFC	Rigid	89.5	8.85-8/4	63	15.52	68
	1800	575	56C	MPSP-304TL-56C	TEFC	Rigid	89.5	3.2	63	15.52	
	1800	208-230/460	56C	MQSP-304TRB-56C	TEFC	Rigid	89.5	8.85-8/4	63	15.52	68
	1800	575	56C	MPSP-304TRB-56C	TEFC	Rigid	89.5	3.2	63	15.52	
	1800	208-230/460	145TC	MQSP-304TSL	TEFC	Rigid	89.5	8.85-8/4	78	15.58	68
	1800	575	145TC	MPSP-304TSL	TEFC	Rigid	89.5	3.2	78	15.58	
	1800	575	145TC	MPSP-304TSL-F0	TEFC	Rigid	89.5	3.2	78	15.58	F0
	1800	208-230/460	182TC	MQSP-304TL	TEFC	Rigid	89.5	8.85-8/4	89	17	68
	1800	575	182TC	MPSP-304TL	TEFC	Rigid	89.5	3.2	89	17	
	1800	208-230/460	182TC	MQSP-304TLNV	TENV	Rigid	89.5	8.85-8/4	89	14.70	68
	1800	575	182TC	MPSP-304TLNV	TENV	Rigid	89.5	3.2	89	14.70	
	1200	208-230/460	213TC	MQSP-306TL	TEFC	Rigid	89.5	9.51-8.6/4.3	110	20.7	68
	1200	575	213TC	MPSP-306TL	TEFC	Rigid	89.5	3.44	110	20.7	
5	3600	208-230/460	184TC	MQSP-502TL	TEFC	Rigid	88.5	13.49-12.2/6.1	95	17	68
	3600	575	184TC	MPSP-502TL	TEFC	Rigid	88.5	4.88	95	17	
	1800	208-230/460	184TC	MQSP-504TL	TEFC	Rigid	89.5	13.82-12.5/6.25	104	17	68
	1800	575	184TC	MPSP-504TL	TEFC	Rigid	89.5	5	104	17	
	1200	208-230/460	215TC	MQSP-506TL	TEFC	Rigid	89.5	15.04-13.6/6.8	171	21.5	68
	1200	575	215TC	MPSP-506TL	TEFC	Rigid	89.5	5.44	171	21.5	
7.5	3600	208-230/460	213TC	MQSP-702TL	TEFC	Rigid	89.5	20.79-18.8/9.4	110	20.7	68
	3600	575	213TC	MPSP-702TL	TEFC	Rigid	89.5	7.52	110	20.7	
	1800	208-230/460	213TC	MQSP-704TL	TEFC	Rigid	91.7	20.57-18.6/9.3	163	20.7	68
	1800	575	213TC	MPSP-704TL	TEFC	Rigid	91.7	7.44	163	20.7	
10	3600	208-230/460	215TC	MQSP-1002TL	TEFC	Rigid	90.2	26.98-24.4/12.2	175	22.3	68
	3600	575	215TC	MPSP-1002TL	TEFC	Rigid	90.2	9.76	175	22.3	
	1800	208-230/460	215TC	MQSP-1004TL	TEFC	Rigid	91.7	26.98-24.4/12.2	200	21.5	68
	1800	575	215TC	MPSP-1004TL	TEFC	Rigid	91.7	9.79	200	21.5	
15	3600	208-230/460	254TC	MQSP-1502TL	TEFC	Rigid	91	40-37/18.5	363	23.2	68
	3600	575	254TC	MPSP-1502TL	TEFC	Rigid	91	14.8	363	23.2	
	1800	208-230/460	254TC	MQSP-1504TL	TEFC	Rigid	92.4	39.81-36/18	286	23.2	68
	1800	575	254TC	MPSP-1504TL	TEFC	Rigid	92.4	14.4	286	23.2	
20	3600	208-230/460	256TC	MQSP-2002TL	TEFC	Rigid	91	50-46/23	422	24.8	68
	3600	575	256TC	MPSP-2002TL	TEFC	Rigid	91	18.4	422	24.8	
	1800	208-230/460	256TC	MQSP-2004TL	TEFC	Rigid	93	54.18-49/24.4	352	24.8	68
	1800	575	256TC	MPSP-2004TL	TEFC	Rigid	93	19.6	352	24.8	

Footnotes:

* **68** = Rated and Nameplated 60/50 Hertz
* **F0** = Terminal box is located in F0 position, on top

PREMIUM DESIGN B NEMA 12-12

CLOSE COUPLED PUMP MOTORS JM STYLE | STAINLESS STEEL CONSTRUCTION L BASE TEFC TOTALLY ENCLOSED FAN COOLED

Max Motion

Features:

- MG-1 Design B and MG-1 Part 31
- Meets or exceeds MEPS (Minimum Efficieny Performance Standards) as described by US Department of Energy in docket 10CFR431 and Natural Resources Canada's Amendment 14
- IP69K enclosure
- Rated and Nameplated 60/50 Hertz 190/380 @ 1.0 SF
- Inverter Duty 10:1 Constant Torque, 20:1 Variable Torque @ 1.0 SF meets MG1 parts 31.4.4.2
- Class F Insulation
- CSAus & CE Certified
- 18 Months Warranty

HP	FL RPM	VOLTS	FRAME	CAT NO.	NOM EFF.	F.L. AMPS	WT (Lbs)	"C" Dimension (Inch)	FOOT NOTES
1	1740	575	143JM	JMPPS-2	85.5%	1.36	36	14.88	
	1740	208-230/460	143JM	JMQPS-2	85.5%	3.76-3.4/1.7	36	14.88	68
1.5	1740	575	145JM	JMPPS-7	86.5%	1.76	42	16.06	
	1740	208-230/460	145JM	JMQPS-7	86.5%	4.87-4.4/2.2	42	16.06	68
2	3480	575	145JM	JMPPS-11	85.5%	1.92	46	16.06	
	3480	208-230/460	145JM	JMQPS-11	85.5%	5.31-4.8/2.4	46	16.06	68
	1740	575	145JM	JMPPS-12	86.5%	2.16	49	16.06	
	1740	208-230/460	145JM	JMQPS-12	86.5%	5.97-5.4/2.7	49	16.06	68
3	3535	575	182JM	JMPPS-16	86.5%	3.24	81	18.58	
	3535	208-230/460	182JM	JMQPS-16	86.5%	8.96-8.1/4.05	81	18.58	68
	3535	575	145JM	JMPPS-16S	86.5%	3.24	53	17.83	
	3535	208-230/460	145JM	JMQPS-16S	86.5%	8.96-8.1/4.05	53	17.83	68
	1765	575	182JM	JMPPS-17	89.5%	3.2	89	18.58	
	1765	208-230/460	182JM	JMQPS-17	89.5%	8.85-8.00/4.00	89	18.58	68
5	3525	575	184JM	JMPPS-21	88.5%	4.88	95	18.58	
	3525	208-230/460	184JM	JMQPS-21	88.5%	13.49-12.2/6.1	95	18.58	68
	1765	575	184JM	JMPPS-22	89.5%	5	104	18.58	
	1765	208-230/460	184JM	JMQPS-22	89.5%	13.82-12.5/6.25	104	18.58	68
7.5	3520	575	213JM	JMPPS-26	89.5%	7.52	110	21.82	
	3520	208-230/460	213JM	JMQPS-26	89.5%	20.79-18.8/9.4	110	21.82	68
	1755	575	213JM	JMPPS-27	91.7%	7.44	163	21.82	
	1755	208-230/460	213JM	JMQPS-27	91.7%	20.57-18.6/9.3	163	21.82	68
10	3525	575	215JM	JMPPS-31	90.2%	9.76	175	21.82	
	3525	208-230/460	215JM	JMQPS-31	90.2%	26.98-24.4/12.2	175	21.82	68
	1760	575	215JM	JMPPS-32	91.7%	9.76	200	22.62	
	1760	208-230/460	215JM	JMQPS-32	91.7%	26.98-24.4/12.2	200	22.62	68

Footnotes:

* **68 =** Rated and Nameplated 60/50 Hertz

GENERAL PURPOSE PREMIUM ROLLED STEEL

HEAVY GAUGE ROLLED STEEL CONSTRUCTION

TEFC TOTALLY ENCLOSED FAN COOLED

Max Motion

Features:

- MG-1 Design B and MG-1 Part 31
- Meets or exceeds MEPS (Minimum Efficieny Performance Standards) as described by US Department of Energy in docket 10CFR431 and Natural Resources Canada's Amendment 14
- IP55 enclosure
- Rated and Nameplated 60/50 Hertz 190/380 at next lowest HP @ 1.15 SF
- Inverter Duty 10:1 Constant Torque, 20:1 Variable Torque @ 1.0 SF meets MG1 parts 31.4.4.2
- 1.15 Service Factor
- Class F Insulation
- F1 Standard Assembly
- Suitable for Horizontal and Vertical Operation
- Auger Adaptor Plate 56C to 56N Available
- CSAus & CE Certified
- 12 Months Warranty

HP	RPM	VOLTS	FRAME	CAT NO.	NOM EFF.	F.L. AMPS	WT (Lbs)	"C" DIMENSION (Inch)	FOOT NOTES
0.33	3600	208-230/460	56C	MQR-132CH	64	1.32-1.38/.69	21	10.7	68, 40
	3600	575	56C	MPR-132CH	64	0.62	21	12	40
	1800	208-230/460	56C	MQR-134CH	64.5	1.52-1.61/.8	22	12	68, 40
	1800	575	56C	MPR-134CH	64.5	0.71	22	12	40
0.50	3600	208-230/460	56C	MQR-122CH	70	1.86-1.82/.91	21	12	68, 40
	3600	575	56C	MPR-122CH	70	0.8	21	12	40
	1800	208-230/460	56C	MQR-124CH	70	1.9-1.96/.98	24	12	68, 40
	1800	575	56C	MPR-124CH	70	1.05	24	12	40
0.75	3600	208-230/460	56C	MQR-342CH	75	2.45-2.38/1.19	22.5	12	68, 40
	3600	575	56C	MPR-342CH	75	1.1	22.5	10.7	40
	1800	208-230/460	56C	MQR-344CH	72	2.61-2.52/1.26	25.3	10.7	68, 40
	1800	575	56C	MPR-344CH	72	1.1	25.3	10.7	40
1	3600	208-230/460	56C	MQRP-102CH	83	2.9-2.7/1.35	25	10.7	68, 40
	3600	575	56C	MPRP-102CH	83	1.45	25	10.7	40
	1800	208-230/460	56C	MQRP-104CH	85.5	3.3-3.0/1.5	27	10.7	68, 40
	1800	575	56C	MPRP-104CH	85.5	1.2	27	10.7	40
1.5	3600	208-230/460	56C	MQRP-152CH	84.5	4.2-3.8/1.9	36	10.7	68, 40
	3600	575	56C	MPRP-152CH	84.5	1.6	28	10.7	40
	1800	208-230/460	56C	MQRP-154CH	86.5	4.8-4.4/2.2	31	12.5	68, 40
	1800	575	56C	MPRP-154CH	86.5	1.8	31	12.5	40
2	3600	208-230/460	56C	MQRP-202CH	86.7	5.4-5/2.5	32	12.5	68, 40
	3600	575	56C	MPRP-202CH	86.7	2.1	32	12.5	40
	1800	208-230/460	56HC	MQRP-204CH	86.5	5.9-5.7/2.85	37	13.7	68, 40
	1800	575	56HC	MPRP-204CH	86.5	2.4	37	13.7	40
3	3600	208-230/460	56HC	MQRP-302CH	87.5	8.2-7.6/3.8	40	13.7	68, 40
	3600	575	56HC	MPRP-302CH	87.5	3.1	40	13.7	40

Footnotes:

* **68** = Rated and Nameplated 60/50 Hertz
* **40** = Suitable with Auger Adaptor Plate 56C to 56N

SINGLE PHASE GENERAL PURPOSE AC MOTORS

HEAVY GAUGE ROLLED STEEL CONSTRUCTION

TEFC TOTALLY ENCLOSED FAN COOLED

MaxMotion

Features:

- Ball bearings Mechanically locked on Shaft End
- Capacitor Start/Capacitor Run Design
- Totally Enclosed and Fully Gasketed for Dirty Enviroments
- Suitable for Horizontal and Vertical Operation
- 1.15 Service Factor
- Class F Insulation
- F1 Standard Assembly
- Auger Adaptor Plate 56C to 56N Available
- CSA Certified, CE Mark
- 12 Months Warranty

HP	RPM	VOLTS	FRAME	CAT NO.	OVERLOAD	NOM EFF.	F.L. AMPS	WT (Lbs)	"C" DIMENSION (Inch)	C-FACE KITS	FOOT NOTES
0.33	3600	115/208-230	56C	MTR-132FDCH	MANUAL	60,7	3.83/2.12-1.92	22	10.7	INCLUDED	40
	1800	115/208-230	56C	MTR-134FDCH	MANUAL	65	3.92/2.17-1.96	26	10.7	INCLUDED	40
0.50	3600	115/208-230	56C	MTR-122FDCH	MANUAL	70,8	5.03/2.78-2.52	25	10.7	INCLUDED	40
	1800	115/208-230	56C	MTR-124FDCH	MANUAL	74,6	5.7/3.15-2.85	27	10.7	INCLUDED	40
0.75	3600	115/208-230	56C	MTR-342FDCH	MANUAL	75,1	6.82/3.77-3.41	26	10.7	INCLUDED	40
	1800	115/208-230	56C	MTR-344FDCH	MANUAL	77	7.33/4.05-3.66	31	11.5	INCLUDED	40
1	3600	115/208-230	56C	MTR-102FDCH	MANUAL	76,1	8.26/4.76-4.31	30	11.5	INCLUDED	40
	1800	115/208-230	56HC	MTR-104FDCH	MANUAL	79,8	9.09/5.02-4.54	38	11.5	INCLUDED	40
1.5	3600	115/208-230	56HC	MTR-152FDCH	MANUAL	81,3	12.47/6.89-6.23	36	11.5	INCLUDED	40
	1800	115/208-230	56HC	MTR-154FDCH	MANUAL	81,7	12.41/6.86-6.2	44	12.5	INCLUDED	40
2	3600	115/208-230	56HC	MTR-202FDCH	MANUAL	82,3	15.92/8.8-7.96	40	12.5	INCLUDED	40
	1800	115/208-230	56HC	MTR-204FDCH	MANUAL	83,6	16.17/8.94-8.08	50	13.7	INCLUDED	40
	1800	115/208-230	145TC	MTR-204FDTCH	MANUAL	83,6	16.17/8.94-8.08	51	13.8	INCLUDED	
3	1800	208-230	184TC	MTR-304FDCH	NONE	87,4	12.5-11.3	96	16.5	INCLUDED	
5	1800	208-230	184TC	MTR-504FDCH	NONE	85,9	22.9-19.2	108,8	16.9	INCLUDED	
7.5	1800	208-230	215T	MTR-754FDH	NONE	88	33-28.10	154	19	H 210TC-1	41
10	1800	208-230	215T	MTR-1004FDH	NONE	88	45.1-38.20	172	19	H 210TC-1	41

Footnotes:

* 40 = Suitable with Auger Adaptor Plate 56C to 56N
* 41 = C Flange H 210TC-1 available, but not included

CENTRIFUGAL THREE PHASE 56J AC MOTORS

HEAVY GAUGE ROLLED STEEL CONSTRUCTION

TEFC TOTALLY ENCLOSED FAN COOLED

MaxMotion

Features:

- MG-1 Design B and MG-1 Part 31
- Meets or exceeds MEPS
- IP55 enclosure
- Rated and Nameplated 60/50 Hertz 190/380 at next lowest HP @ 1.15 SF
- Inverter Duty 10:1 Constant Torque, 20:1 Variable Torque @ 1.0 SF meets MG1 parts 31.4.4.2
- 1.15 Service Factor
- Class F Insulation
- F1 Standard Assembly
- Suitable for Horizontal and Vertical Operation
- CSAus & CE Certified
- 12 Months Warranty

HP	FL RPM	VOLTS	FRAME	CAT NO.	CONSTRUCTION	NOM EFF.	F.L. AMPS	WT (Lbs)	"C" Dimension (Inch)	FOOT NOTES
0.33	3481	208-230/460	56J	MQR-132JH	Rolled Steel	67.6	1.28-1.31/0.66	21	11.1	68
	3470	575	56J	MPR-132JH	Rolled Steel	62.8	0.57	21	11.1	
	1744	208-230/460	56J	MQR-134JH	Rolled Steel	66.1	1.53-1.63/0.82	22	11.1	68
	1750	575	56J	MPR-134JH	Rolled Steel	69.2	0.58	22	11.1	
0.5	3466	208-230/460	56J	MQR-122JH	Rolled Steel	71.6	1.74-1.67/0.84	21	11.1	68
	3471	575	56J	MPR-122JH	Rolled Steel	69.3	0.672	21	11.1	
	1741	208-230/460	56J	MQR-124JH	Rolled Steel	74.1	1.9-1.95/0.98	24	11.1	68
	1753	575	56J	MPR-124JH	Rolled Steel	77.1	0.71	24	11.1	
0.75	3469	208-230/460	56J	MQR-342JH	Rolled Steel	80.3	2.24-2.08/1.04	22.5	11.1	68
	3474	575	56J	MPR-342JH	Rolled Steel	76.2	0.86	22.5	11.1	
	1738	208-230/460	56J	MQR-344JH	Rolled Steel	80.7	2.43-2.34/1.18	25.3	11.1	68
	1744	575	56J	MPR-344JH	Rolled Steel	80.5	0.91	25.3	11.1	
1	3506	208-230/460	56J	MQRP-102JH	Rolled Steel	82.7	2.92-2.75/1.38	25	11.1	68
	3510	575	56J	MPRP-102JH	Rolled Steel	80.7	1.14	25	11.1	
	1752	208-230/460	56J	MQRP-104JH	Rolled Steel	86.5	3.01-2.82/1.41	27	11.1	68
	1756	575	56J	MPRP-104JH	Rolled Steel	85.6	1.14	27	11.1	
1.5	3492	208-230/460	56J	MQRP-152JH	Rolled Steel	86.6	4.03-3.81/1.9	28	11.1	68
	3478	575	56J	MPRP-152JH	Rolled Steel	85.1	1.61	28	11.1	
	1752	208-230/460	56J	MQRP-154JH	Rolled Steel	86.6	4.59-4.41/2.21	31	11.9	68
	1745	575	56J	MPRP-154JH	Rolled Steel	86.7	1.65	31	11.9	
2	3500	208-230/460	56J	MQRP-202JH	Rolled Steel	85.5	5.39-5.05/2.53	32	11.9	68
	3502	575	56J	MPRP-202JH	Rolled Steel	86	2.03	32	11.9	
	1741	208-230/460	56J	MQRP-204JH	Rolled Steel	87.1	6.0-5.43/2.74	37	12.9	68
	1752	575	56J	MPRP-204JH	Rolled Steel	87.6	2.15	37	12.9	
3	3513	208-230/460	56J	MQRP-302JH	Rolled Steel	87.6	7.81-7.18/3.54	42	12.9	68
	3512	575	56J	MPRP-302JH	Rolled Steel	87.6	3.05	42	12.9	

Footnotes:

* **68** = Rated and Nameplated 60/50 Hertz

SINGLE PHASE CENTRIFUGAL JET PUMP AC MOTORS

HEAVY GAUGE ROLLED STEEL CONSTRUCTION

TEFC TOTALLY ENCLOSED FAN COOLED

MaxMotion

Features:

- Ball bearings Mechanically locked on Shaft End
- Capacitor Start/Capacitor Run Design
- Totally Enclosed and Fully Gasketed for Dirty Enviroments
- Suitable for Horizontal and Vertical Operation
- 1.15 Service Factor
- Class F Insulation
- Automatic thermal overload
- F1 Standard Assembly
- CSA Certified, CE Mark
- 12 Months Warranty

HP	FL RPM	VOLTS	FRAME	CAT NO.	CONSTRUCTION	NOM EFF.	F.L. AMPS	WT (Lbs)	"C" Dimension (Inch)	FOOT NOTES
0.33	3520	115/208-230	56J	MTR-132FDJH	Rolled Steel	67.3	3.83/2.12-1.92	22	11.1	
	1770	115/208-230	56J	MTR-134FDJH	Rolled Steel	68.8	3.92/2.17-1.96	26	11.1	
0.5	3520	115/208-230	56J	MTR-122FDJH	Rolled Steel	71.3	5.03/2.78-2.52	25	11.1	
	1765	115/208-230	56J	MTR-124FDJH	Rolled Steel	74.6	5.7/3.15-2.85	27	11.1	
0.75	3520	115/208-230	56J	MTR-342FDJH	Rolled Steel	77.5	6.82/3.77-3.41	26	11.1	
	1760	115/208-230	56J	MTR-344FDJH	Rolled Steel	77	7.33/4.05-3.66	31	11.9	
1	3520	115/208-230	56J	MTR-102FDJH	Rolled Steel	77.9	8.61/4.76-4.31	30	11.9	
	1760	115/208-230	56J	MTR-104FDJH	Rolled Steel	79.8	9.09/5.02-4.54	38	12.9	
1.5	3520	115/208-230	56J	MTR-152FDJH	Rolled Steel	82.3	12.47/6.89-6.23	36	12.9	
	1750	115/208-230	56J	MTR-154FDJH	Rolled Steel	81.8	12.41/6.86-6.2	44	12.9	
2	3510	115/208-230	56J	MTR-202FDJH	Rolled Steel	83	15.92/8.8-7.96	42	12.9	
	1750	115/208-230	56J	MTR-204FDJH	Rolled Steel	84.7	16.17/8.94-8.08	50	14.1	

METRIC IE1 & IE3 ALUMINUM & CAST IRON MOTORS

IEC DESIGN, WITH NEMA B TORQUE CURVES

TEFC TOTALLY ENCLOSED FAN COOLED

MaxMotion

Features:

- Class H Insulation, with B Temp Rise
- SKF High Temperature Bearings
- Inverter Duty Magnet Wire meets MG1 Part 31 10:1 CT and 20:1 VT
- IP55 enclosure
- Rated and Nameplated 60/50 Hertz 190/380-415 or 380-415 @ 1.0 SF
- Aluminum Construction 56-160 Frame, Cast Iron 180-500 Frame
- Rotatable & Removable Bases 56-160 Frame, Rigid Base 180 and larger
- 56-112 Frames come with Sealed Bearings, 132 and larger are Re-Greasable
- PTC Installed on frames 132 and larger
- CSA Certified, CE Mark
- 36 Months Warranty

HP	KW	FL RPM	VOLTS	FRAME	CAT NO.	NOM EFF.	F.L. AMPS	WT (Lbs)	"L" Dimension (Inch)	B14 FLANGE	B5 FLANGE	FOOT NOTES
0.13	0.09	1590	208-230/460	56	IJA562-4-24	54	.76-.69/.34	7.7	198.5	IJAB14-56	IJAB5-56	68
		1590	333/575	56	IJA562-4-35	54	.47/.27	7.7	198.5	IJAB14-56	IJAB5-56	
		1020	333/575	63	IJA631-6-35	44	.61/.35	9.9	217	IJAB14-63	IJAB5-63	
0.17	0.12	3240	208-230/460	56	IJA562-2-24	64	.72-.65/.33	7.7	198.5	IJAB14-56	IJAB5-56	68
		3240	333/575	56	IJA562-2-35	64	.45/.26	7.7	198.5	IJAB14-56	IJAB5-56	
		1630	208-230/460	63	IJA631-4-24	62	.83-.76/.38	8.6	217	IJAB14-63	IJAB5-63	68
		1630	333/575	63	IJA631-4-35	62	.53/.31	8.6	217	IJAB14-63	IJAB5-63	
		1020	333/575	63	IJA632-6-35	48	.72/.42	11	217	IJAB14-63	IJAB5-63	
0.25	0.19	3320	208-230/460	63	IJA631-2-24	63	1.02-.92/.46	9.46	217	IJAB14-63	IJAB5-63	68
		3320	333/575	63	IJA631-2-35	63	.61/.35	9.46	217	IJAB14-63	IJAB5-63	
		1570	208-230/460	63	IJA632-4-24	66	1.04-.94/.47	8.8	217	IJAB14-63	IJAB5-63	68
		1570	333/575	63	IJA632-4-35	66	.65/.38	8.8	217	IJAB14-63	IJAB5-63	
		1020	208-230/460	71	IJA711-6-24	52.5	1.44-1.3/.65	15.4	245	IJAB14-71	IJAB5-71	68
		1020	333/575	71	IJA711-6-35	52.5	.90/.52	15.4	245	IJAB14-71	IJAB5-71	
0.33	0.25	3260	208-230/460	63	IJA632-2-24	64	1.34-1.21/.61	8.8	217	IJAB14-63	IJAB5-63	68
		3260	333/575	63	IJA632-2-35	64	.84/.48	8.8	217	IJAB14-63	IJAB5-63	
		1595	208-230/460	63	IJA633-4-24	68	1.38-1.25/.62	11	217	IJAB14-63	IJAB5-63	68
		1595	333/575	63	IJA633-4-35	68	.86/.50	11	217	IJAB14-63	IJAB5-63	
		1595	208-230/460	71	IJA711-4-24	68	1.38-1.25/.62	11	245	IJAB14-71	IJAB5-71	68
		1595	333/575	71	IJA711-4-35	68	.86/.50	11	245	IJAB14-71	IJAB5-71	
		1020	208-230/460	71	IJA712-6-24	57.5	1.77-1.6/.80	15.4	245	IJAB14-71	IJAB5-71	68
		1020	333/575	71	IJA712-6-35	57.5	1.11/.64	15.4	245	IJAB14-71	IJAB5-71	
0.5	0.37	3285	208-230/460	63	IJA633-2-24	70	1.81-1.64/.82	11	217	IJAB14-63	IJAB5-63	68
		3285	333/575	63	IJA633-2-35	70	1.13/.66	11	217	IJAB14-63	IJAB5-63	
		3285	208-230/460	71	IJA711-2-24	70	1.81-1.64/.82	11	245	IJAB14-71	IJAB5-71	68
		3285	333/575	71	IJA711-2-35	70	1.13/.66	11	245	IJAB14-71	IJAB5-71	
		1595	208-230/460	71	IJA712-4-24	70	1.96-1.77/.88	12.1	245	IJAB14-71	IJAB5-71	68
		1595	333/575	71	IJA712-4-35	70	1.22/.71	12.1	245	IJAB14-71	IJAB5-71	
		1060	208-230/460	80	IJA801-6-24	62	2.37-2.14/1.04	20.24	286	IJAB14-80S	IJAB5-80S	68
		1060	333/575	80	IJA801-6-35	62	1.48/.86	20.24	286	IJAB14-80S	IJAB5-80S	

Footnotes:

* **68** = Rated and Nameplated 60/50 Hertz

CHART CONTINUES ON NEXT PAGE

CHART CONTINUED FROM PREVIOUS PAGE

HP	KW	FL RPM	VOLTS	FRAME	CAT NO.	NOM EFF.	F.L. AMPS	WT (Lbs)	"L" Dimension (Inch)	B14 FLANGE	B5 FLANGE	FOOT NOTES
0.75	0.56	3285	208-230/460	71	IJA712-2-24	72	2.59-2.34/1.17	13.2	245	IJAB14-71	IJAB5-71	68
		3285	333/575	71	IJA712-2-35	72	1.62/.94	13.2	245	IJAB14-71	IJAB5-71	
		1665	208-230/460	71	IJA713-4-24	74	2.75-2.49/1.24	16.5	245	IJAB14-71	IJAB5-71	68
		1665	333/575	71	IJA713-4-35	74	1.72/1	16.4	245	IJAB14-71	IJAB5-71	
		1680	208-230/460	80	IJA2801-4-24	81.1	2.51-2.27/1.13	20	285	IJAB14-80S	IJAB5-80S	68
		1680	333/575	80	IJA2801-4-35	81.1	1.56/0.90	20	285	IJAB14-80S	IJAB5-80S	
		1060	208-230/460	80	IJA2802-6-24	72	3.21-2.91/1.45	22	285	IJAB14-80S	IJAB5-80S	68
		1060	333/575	80	IJA2802-6-35	72	2.01/1.16	22	285	IJAB14-80S	IJAB5-80S	
1	0.75	3455	208-230/460	71	IJA713-2-24	77	3.3-2.98/1.49	16.5	245	IJAB14-71	IJAB5-71	68
		3455	333/575	71	IJA713-2-35	77	2.06/1.19	16.5	245	IJAB14-71	IJAB5-71	
		3455	208-230/460	80	IJA2801-2-24	77	3.30-2.98/1.49	19.8	285	IJAB14-80S	IJAB5-80S	68
		3455	333/575	80	IJA2801-2-35	77	2.06/1.19	19.8	285	IJAB14-80S	IJAB5-80S	
		1704	208-230/460	80	IJA2802-4-24	83.5	3.33-3.01/1.50	24.4	285	IJAB14-80L	IJAB5-80L	68
		1704	333/575	80	IJA2802-4-35	83.5	2.07/1.20	24.4	285	IJAB14-80L	IJAB5-80L	
		1120	208-230/460	90	IJA290S-6-24	82.5	3.55-3.21/1.61	35.2	315	IJAB14-90	IJAB5-90	68
		1120	333/575	90	IJA290S-6-35	82.5	2.22/1.29	35.2	315	IJAB14-90	IJAB5-90	
1.5	1.12	3455	208-230/460	80	IJA2802-2-24	84	4.38-3.96/1.98	19.3	285	IJAB14-80S	IJAB5-80S	68
		3455	333/575	80	IJA2802-2-35	84	2.74/1.58	19.3	285	IJAB14-80S	IJAB5-80S	
		1665	208-230/460	80	IJA803-4-24-IE3	79	5.02-4.54/2.27	23.1	300	IJAB14-80L-NG	IJAB5-80L-NG	8
		1665	333/575	80	IJA803-4-35-IE3	79	3.14/1.82	23.1	300	IJAB14-80L-NG	IJAB5-80L-NG	
		1734	208-230/460	90	IJA290S-4-24	86.5	4.64-4.2/2.1	35.2	315	IJAB14-90-NG	IJAB5-90-NG	68
		1734	333/575	90	IJA290S-4-35	86.5	2.90/1.68	35.2	315	IJAB14-90-NG	IJAB5-90-NG	
		1134	208-230/460	90	IJA290L-6-24	87.5	4.78-4.32/2.16	49.2	340	IJAB14-90-NG	IJAB5-90-NG	68
		1134	333/575	90	IJA290L-6-35	87.5	2.99/1.73	49.2	340	IJAB14-90-NG	IJAB5-90-NG	
2	1.49	3470	208-230/460	80	IJA803-2-24-IE3	85.5	5.80-5.24/262	26.4	300	IJAB14-80L	IJAB5-80L	68
		3470	333/575	80	IJA803-2-35-IE3	85.5	3.62/2.10	26.4	300	IJAB14-80L	IJAB5-80L	
		3474	208-230/460	90	IJA290S-2-24	85.5	5.79-5.24/2.62	29.7	315	IJAB14-90	IJAB5-90	68
		3474	333/575	90	IJA290S-2-35	85.5	3.62/2.10	29.7	315	IJAB14-90	IJAB5-90	
		1734	208-230/460	90	IJA290L-4-24	86.5	6.25-5.65/2.83	39.6	340	IJAB14-90-NG	IJAB5-90-NG	68
		1734	333/575	90	IJA290L-4-35	86.5	3.90/2.26	39.6	340	IJAB14-90-NG	IJAB5-90-NG	
		1139	208-230/460	100	IJA2100L-6-24	88.5	6.41-5.80/2.90	73.7	380	IJAB14-100	IJAB5-100	68
		1139	333/575	100	IJA2100L-6-35	88.5	4.01/2.32	73.7	380	IJAB14-100	IJAB5-100	
2.4	1.79	1730	208-230/460	90	IJA90L2-4-24	86.5	7.41-6.70/3.35	45.1	345	IJAB14-90L	IJAB5-90L	68
		1730	333/575	90	IJA90L2-4-35	86.5	4.63/2.68	45.1	345	IJAB14-90L	IJAB5-90L	
3	2.24	3474	208-230/460	90	IJA290L-2-24	86.5	8.30-7.51/3.76	37.4	340	IJAB14-90	IJAB5-90	68
		3474	333/575	90	IJA290L-2-35	86.5	5.19/3.01	37.4	340	IJAB14-90	IJAB5-90	
		1740	208-230/460	100	IJA2100L1-4-24	89.5	8.40-7.60/3.80	55	380	IJAB14-100	IJAB5-100	68
		1740	333/575	100	IJA2100L1-4-35	89.5	5.25/3.04	55	380	IJAB14-100	IJAB5-100	
		1145	208-230/460	112	IJA2112M-6-46	89.5	9.18-8.30/4.20	66	401	IJAB14-112L	IJAB5-112L	68
		1145	575/990	112	IJA2112M-6-59	89.5	5.80/3.36	66	401	IJAB14-112L	IJAB5-112L	

Footnotes:

* **68** = Rated and Nameplated 60/50 Hertz

CHART CONTINUES ON NEXT PAGE

CHART CONTINUED FROM PREVIOUS PAGE

HP	KW	FL RPM	VOLTS	FRAME	CAT NO.	NOM EFF.	F.L. AMPS	WT (Lbs)	"L" Dimension (Inch)	B14 FLANGE	B5 FLANGE	FOOT NOTES
4	2.98	3470	208-230/460	90	IJA90L2-2-24	88.5	10.8-9.78/4.89	42.9	345	IJAB14-90L	IJAB5-90L	68
		3470	333/575	90	IJA90L2-2-35	88.5	6.76/3.91	42.9	345	IJAB14-90L	IJAB5-90L	
		3474	208-230/460	100	IJA2100L-2-24	88.5	10.84-9.80/4.90	50.6	380	IJAB14-100	IJAB5-100	68
		3474	333/575	100	IJA2100L-2-35	88.5	6.77/3.92	50.6	380	IJAB14-100	IJAB5-100	
		1740	208-230/460	100	IJA2100L2-4-24	89.5	11.39-10.30/5.10	67.1	380	IJAB14-100	IJAB5-100	68
		1740	333/575	100	IJA2100L2-4-35	89.5	7.05/4.08	67.1	380	IJAB14-100	IJAB5-100	
		1160	208-230/460	132	IJA132S-6-46	89.5	12.60-11.40/5.69	91.3	445	IJAB14-132	IJAB5-132	68
		1160	575/990	132	IJA132S-6-59	89.5	4.55/2.64	91.3	445	IJAB14-132	IJAB5-132	
5.5	4.1	3485	208-230/460	112	IJA2112M-2-46	88.5	14.26-12.90/6.40	63.9	401	IJAB14-112	IJAB5-112	68
		3485	575/990	112	IJA2112M-2-59	88.5	8.84/5.12	63.9	401	IJAB14-112	IJAB5-112	
		1725	208-230/460	112	IJA2112M-4-46	89.5	15.15-13.70/6.80	82.5	401	IJAB14-112	IJAB5-112	68
		1725	575/990	112	IJA2112M-4-59	89.5	9.39/5.44	82.5	401	IJAB14-112	IJAB5-112	
		1160	208-230/460	132	IJA132M1-6-46	89.5	16.80-15.20/7.58	108.9	485	IJAB14-132	IJAB5-132	68
		1160	575/990	132	IJA132M1-6-59	89.5	6.10/3.52	108.9	485	IJAB14-132	IJAB5-132	
7.5	5.6	3515	208-230/460	112	IJA2112M2-2-46	89.5	19.35-17.50/8.76	79.2	401	IJAB14-112	IJAB5-112	68
		3515	575/990	112	IJA2112M2-2-59	89.5	12.10/7.01	79.2	401	IJAB14-112	IJAB5-112	
		3515	208-230/460	132	IJA132S1-2-46	89.5	19.40-17.50/8.76	94.6	445	IJAB14-132	IJAB5-132	68
		3515	575/990	132	IJA132S1-2-59	89.5	7.01/4.07	94.6	445	IJAB14-132	IJAB5-132	
		1750	208-230/460	132	IJA132S-4-46	91.7	20.10-18.10/9.07	107.8	445	IJAB14-132	IJAB5-132	68
		1750	575/990	132	IJA132S-4-59	91.7	7.26/4.21	107.8	445	IJAB14-132	IJAB5-132	
		1160	208-230/460	132	IJA132M2-6-46	91	22.40-20.20/10.10	133	485	IJAB14-132	IJAB5-132	68
		1160	575/990	132	IJA132M2-6-59	91	8.09/4.70	133	485	IJAB14-132	IJAB5-132	
10	7.46	3515	208-230/460	112	IJA112M3-2-46	90.2	26.2-23.7/11.9	84.7	400	IJAB14-112L	IJAB5-112L	68
		3515	575/990	112	IJA112M3-2-59	90.2	9.49/5.51	84.7	400	IJAB14-112L	IJAB5-112L	
		3515	208-230/460	132	IJA132S2-2-46	90.2	26.20-23.70/11.90	105.6	445	IJAB14-132	IJAB5-132	68
		3515	575/990	132	IJA132S2-2-59	90.2	9.49/5.51	105.6	445	IJAB14-132	IJAB5-132	
		1750	208-230/460	132	IJA132M-4-46	91.7	27-24.40/12.20	128.7	485	IJAB14-132	IJAB5-132	68
		1750	575/990	132	IJA132M-4-59	91.7	9.78/5.68	128.7	485	IJAB14-132	IJAB5-132	
		1160	208-230/460	132	IJA132M3-6-46	91.0	29.00-26.20/13.10	184.8	485	IJAB14-132	IJAB5-132	68
		1160	575/990	132	IJA132M3-6-59	91.0	10.50/6.08	184.8	485	IJAB14-132	IJAB5-132	
		1160	208-230/460	160	IJA160M-6-46	91	29-26.20/13.10	184.8	615	N/A	IJAB5-160	68
		1160	575/990	160	IJA160M-6-59	91	10.50/6.08	184.8	615	N/A	IJAB5-160	
12.4	9.25	3530	208-230/460	132	IJA132M1-2-46	90.2	32.20-28.90/14.50	125.4	485	IJAB14-132	IJAB5-132	68
		3530	575/990	132	IJA132M1-2-59	90.2	11.60/6.72	125.4	485	IJAB14-132	IJAB5-132	
		1750	208-230/460	132	IJA132M1-4-46	90.4	33.80-30.60/15.30	158.4	485	IJAB14-132	IJAB5-132	68
		1750	575/990	132	IJA132M1-4-59	90.4	12.20/7.10	158.4	485	IJAB14-132	IJAB5-132	
15	11.19	3530	208-230/460	132	IJA132M2-2-46	91	37.70-34.10/17	129.8	485	IJAB14-132	IJAB5-132	68
		3530	575/990	132	IJA132M2-2-59	91	13.60/7.92	129.8	485	IJAB14-132	IJAB5-132	
		3530	208-230/460	160	IJA160M1-2-46	91	37.70-34.10/17	185.9	615	N/A	IJAB5-160	68
		3530	575/990	160	IJA160M1-2-59	91	13.60/7.92	185.9	615	N/A	IJAB5-160	
		1755	208-230/460	160	IJA160M-4-46	92.4	38.90-35.20/17.60	221.1	615	N/A	IJAB5-160	68
		1755	575/990	160	IJA160M-4-59	92.4	14.10/8.17	221.1	615	N/A	IJAB5-160	
		1160	208-230/460	160	IJA160L-6-46	91.7	41.60-37.60/18.80	236.5	660	N/A	IJAB5-160	68
		1160	575/990	160	IJA160L-6-59	91.7	15.04/8.71	236.5	660	N/A	IJAB5-160	

Footnotes:

* **68 =** Rated and Nameplated 60/50 Hertz

NEXT PAGE

CHART CONTINUED FROM PREVIOUS PAGE

HP	KW	FL RPM	VOLTS	FRAME	CAT NO.	NOM EFF.	F.L. AMPS	WT (Lbs)	"L" Dimension (Inch)	B14 FLANGE	B5 FLANGE	FOOT NOTES
20	14.92	3530	208-230/460	132	IJA132M3-2-46	91	51.4-46.5/23.2	143	485	N/A	N/A	68
		3530	575/990	132	IJA132M3-2-59	91	18.6/10.8	143	485	N/A	N/A	
		3530	208-230/460	160	IJA160M2-2-46	91	51.40-46.50/23.20	210.1	615	N/A	IJAB5-160	68
		3530	575/990	160	IJA160M2-2-59	91	18.60/10.80	210.1	615	N/A	IJAB5-160	
		1755	208-230/460	160	IJA160L-4-46	93	52.10-47.10/23.50	237.6	660	N/A	IJAB5-160	68
		1755	575/990	160	IJA160L-4-59	93	18.80/10.90	237.6	660	N/A	IJAB5-160	
		1170	208-230/460	180	IJC180L-6-46	91.7	56.10-50.70/25.30	430	690	N/A	IJCB5-180	68
		1170	575/990	180	IJC180L-6-59	91.7	20.24/11.73	430	690	N/A	IJCB5-180	
25	18.65	3525	208-230/460	160	IJA160L-2-46	91.7	92.90-56.90/28.50	238.7	660	N/A	IJAB5-160	68
		3525	575/990	160	IJA160L-2-59	91.7	22.80/13.20	238.7	660	N/A	IJAB5-160	
		1760	208-230/460	180	IJC180M-4-46	93.6	63.80-57.70/28.80	406	652	N/A	IJCB5-180	68
		1760	575/990	180	IJC180M-4-59	93.6	23.10/13.40	406	652	N/A	IJCB5-180	
		1175	460/796	200	IJC200L1-6-47	93	30.80/17.80	507.8	746	N/A	IJCB5-200	68
		1175	575/990	200	IJC200L1-6-59	93	24.64/14.30	507.8	746	N/A	IJCB5-200	
30	22.38	3545	208-230/460	160	IJA160L2-2-46	91.7	74.80-67.70/33.80	245.3	660	N/A	IJAB5-160	68
		3545	575/990	160	IJA160L2-2-59	91.7	27.10/15.70	245.3	660	N/A	IJAB5-160	
		3545	208-230/460	180	IJC180M-2-46	91.7	74.80-67.70/33.80	412.7	652	N/A	IJCB5-180	68
		3545	575/990	180	IJC180M-2-59	91.7	27.10/15.70	412.7	652	N/A	IJCB5-180	
		1760	208-230/460	180	IJC180L-4-46	93.6	75.90-68.60/34.30	467	690	N/A	IJCB5-180	68
		1760	575/990	180	IJC180L-4-59	93.6	27.40/15.90	467	690	N/A	IJCB5-180	
		1175	460/796	200	IJC200L2-6-47	93	36.70/21.20	358.8	746	N/A	IJCB5-200	68
		1175	575/990	200	IJC200L2-6-59	93	29.36/26.10	358.8	746	N/A	IJCB5-200	
40	29.84	3550	460/796	200	IJC200L1-2-47	92.4	45.80/26.50	550	746	N/A	IJCB5-200	68
		3550	575/990	200	IJC200L1-2-59	92.4	36.60/21.30	550	746	N/A	IJCB5-200	
		1770	460/796	200	IJC200L-4-47	94.1	46.50/26.90	583	746	N/A	IJCB5-200	68
		1770	575/990	200	IJC200L-4-59	94.1	37.20/21.60	583	746	N/A	IJCB5-200	
		1175	460/796	225	IJC225M-6-47	94.1	48.20/27.990	667	810	N/A	IJCB5-225	68
		1175	575/990	225	IJC225M-6-59	94.1	38.56/22.40	667	810	N/A	IJCB5-225	
50	37.3	3550	460/796	200	IJC200L2-2-47	93	56.10/32.40	567.6	746	N/A	IJCB5-200	68
		3550	575/990	200	IJC200L2-2-59	93	44.90/26.10	567.6	746	N/A	IJCB5-200	
		1780	460/796	200	IJC200L3-4-47	94.5	57.10/33.00	727	746	N/A	IJCB5-200	68
		1780	575/990	200	IJC200L3-4-59	94.5	45.70/26.60	727	746	N/A	IJCB5-200	
		1780	460/796	225	IJC225S-4-47	94.5	57.10/33	727	780	N/A	IJCB5-225	68
		1780	575/990	225	IJC225S-4-59	94.5	45.70/26.60	727	780	N/A	IJCB5-225	
		1180	460/796	250	IJC250M-6-47	94.1	58.80/34	874.5	900	N/A	IJCB5-250	68
		1180	575/990	250	IJC250M-6-59	94.4	47.04/27.30	874.5	900	N/A	IJCB5-250	
60	44.76	3555	460/796	225	IJC225M-2-47	93.6	67/38.70	716	780	N/A	IJCB5-225	68
		3555	575/990	225	IJC225M-2-59	93.6	53.60/31.20	716	780	N/A	IJCB5-225	
		1780	460/796	225	IJC225M-4-47	95	69.10/39.90	797	810	N/A	IJCB5-225	68
		1780	575/990	225	IJC225M-4-59	95	55.30/32.10	797	810	N/A	IJCB5-225	
		1180	460/796	250	IJC280S-6-47	93.7	70.30/40.60	1107	982	N/A	IJCB5-280	68
		1180	575/990	250	IJC280S-6-59	93.7	56.24/32.60	1107	982	N/A	IJCB5-280	

Footnotes:

* **68 =** Rated and Nameplated 60/50 Hertz

CHART CONTINUES ON NEXT PAGE

CHART CONTINUED FROM PREVIOUS PAGE

HP	KW	FL RPM	VOLTS	FRAME	CAT NO.	NOM EFF.	F.L. AMPS	WT (Lbs)	"L" Dimension (Inch)	B14 FLANGE	B5 FLANGE	FOOT NOTES
75	55.95	3560	460/796	250	IJC250M-2-47	93.6	81.90/47.40	910.7	900	N/A	IJCB5-250	68
		3560	575/990	250	IJC250M-2-59	93.6	65.60/38.10	910.7	900	N/A	IJCB5-250	
		1780	460/796	250	IJC250M-4-47	95.4	84.10/48.60	979	900	N/A	IJCB5-250	68
		1780	575/990	250	IJC250M-4-59	95.4	67.30/39.10	979	900	N/A	IJCB5-250	
		1180	460/796	280	IJC280M-6-47	94.5	85.90/49.60	1263.5	1033	N/A	IJCB5-280	68
		1180	575/990	280	IJC280M-6-59	94.5	68.72/39.80	1263.5	1033	N/A	IJCB5-280	
100	74.6	3570	460/796	280	IJC280S-2-47	94.1	111/64.20	1203.9	982	N/A	IJCB5-280-2POLE	68
		3570	575/990	280	IJC280S-2-59	94.1	88.90/51.60	1203.9	982	N/A	IJCB5-280-2POLE	
		1780	460/796	280	IJC280S-4-47	95.4	112/64.80	1292	982	N/A	IJCB5-280	68
		1780	575/990	280	IJC280S-4-59	95.4	89.70/52.10	1292	982	N/A	IJCB5-280	
		1180	460/796	315	IJC315S-6-47	95	117/67.60	1858.8	1208	N/A	IJCB5-315	68
		1180	575/990	315	IJC315S-6-59	95	93.60/54.60	1858.8	1208	N/A	IJCB5-315	
125	93.25	3570	460/796	280	IJC280M-2-47	95	134/77.40	1304.6	1033	N/A	IJCB5-280-2POLE	68
		3570	575/990	280	IJC280M-2-59	95	106/61.40	1304.6	1033	N/A	IJCB5-280-2POLE	
		1785	460/796	280	IJC280M-4-47	95.4	136/78.60	1409	1033	N/A	IJCB5-280	68
		1785	575/990	280	IJC280M-4-59	95.4	108.80/63.20	1409	1033	N/A	IJCB5-280	
		1185	460/796	315	IJC315M-6-47	95	140/80.90	2074.9	1318	N/A	IJCB5-315	68
		1185	575/990	315	IJC315M-6-59	95	112/65	2074.9	1318	N/A	IJCB5-315	
150	111.9	3575	460/796	315	IJC315S-2-47	95	161/93	1977.9	1178	N/A	IJCB5-315	68
		3575	575/990	315	IJC315S-2-59	95	128.80/74.8	1977.9	1178	N/A	IJCB5-315	
		1785	460/796	315	IJC315S-4-47	95.8	164/94.80	2070.5	1208	N/A	IJCB5-315	68
		1785	575/990	315	IJC315S-4-59	95.8	131.20/76	2070.5	1208	N/A	IJCB5-315	
		1185	460/796	315	IJC315L1-6-47	95.8	168/97.10	2242.5	1318	N/A	IJCB5-315	68
		1185	575/990	315	IJC315L1-6-59	95.8	134.40/77.70	2242.5	1318	N/A	IJCB5-315	
180	134.28	3575	460/796	315	IJC315M-2-47	95.4	193/111.50	2268.9	1288	N/A	IJCB5-315	68
		3575	575/990	315	IJC315M-2-59	95.4	154.40/89.32	2268.9	1288	N/A	IJCB5-315	
		1785	460/796	315	IJC315M-4-47	96.2	196/113.3	2277.7	1318	N/A	IJCB5-315	68
		1785	575/990	315	IJC315M-4-59	96.2	156.80/91.10	2277.7	1318	N/A	IJCB5-315	
		1185	460/796	315	IJC315L2-6-47	86.5	201/116.20	2471.8	1318	N/A	IJCB5-315	68
		1185	575/990	315	IJC315L2-6-59	86.5	160.80/93.40	2471.8	1318	N/A	IJCB5-315	
200	149.2	3575	460/796	315	IJC315L1-2-47	95.4	234/135.20	2352.7	1288	N/A	IJCB5-315	68
		3575	575/990	315	IJC315L1-2-59	95.4	187.20/108.50	2352.7	1288	N/A	IJCB5-315	
		1785	460/796	315	IJC315L1-4-47	96.2	237/137	2482.8	1318	N/A	IJCB5-315	68
		1785	575/990	315	IJC315L1-4-59	96.2	189.60/110.20	2482.8	1318	N/A	IJCB5-315	
270	201.42	3575	460/796	315	IJC315L2-2-47	95.8	288/166.50	2632.77	1288	N/A	IJCB5-315	68
		3575	575/990	315	IJC315L2-2-59	95.8	230/40/133.40	2632.77	1288	N/A	IJCB5-315	
		1788	460/796	315	IJC315L2-4-47	96.2	297/171.60	2729.8	1318	N/A	IJCB5-315	68
		1788	575/990	315	IJC315L2-4-59	96.2	237.60/138	2729.8	1318	N/A	IJCB5-315	
340	250.00	1785	575/990	355M	IJC355M-4-59	96.2	290/168	3630	1524	N/A	N/A	

Footnotes:

* **68 =** Rated and Nameplated 60/50 Hertz

METRIC IE1 & IE3 STAINLESS STEEL MOTORS

304 GRADE STAINLESS STEEL TENV TOTALLY ENCLOSED
NON-VENTILTED & TEFC TOTALLY ENCLOSED FAN COOLED

MaxMotion

Features:

- MG-1 Design B and MG-1 Part 31
- Meets or exceeds NEMA Premium Efficiencies (1HP)
- IP66 enclosure
- Rated and Nameplated 60/50 Hertz 190/380-415 @ 1.0 SF
- Inverter Duty 10:1 Constant Torque,
  20:1 Variable Torque 1.0 SF meets MG1 parts 31.4.4.2
- Class F Insulation
- CSAus & CE Certified
- 18 Months Warranty

HP	RPM	VOLTS	FRAME	CAT NO.	NOM EFF.	F.L. AMPS	WT (Lbs)	"L" Dimension (mm)	B14 FLANGE	B5 FLANGE	FOOT NOTES
0.25	3600	208-230/460	63	MQS-6312	73	1.17-1.06/.53	17.6	242	63B14SS	63B5SS	68, B3
	3600	575	63	MPS-6312	73	0.424	17.6	242	63B14SS	63B5SS	B3
	1800	208-230/460	63	MQS-6324	75	1.17-1.06/.53	17.6	242	63B14SS	63B5SS	68, B3
	1800	575	63	MPS-6324	75	0.424	17.6	242	63B14SS	63B5SS	B3
	1800	208-230/460	63	MQS-6324NVB14	75	1.17-1.06/.53	17.6	241	Included	N/A	68, B14
	1200	208-230/460	71	MQS-7116	63	1.46-1.32/0.66	20.9	250	71B14SS	71B5SS	68,B3
	1200	575	71	MPS-7116	63	0.528	20.9	250	71B14SS	71B5SS	B3
0.33	3600	208-230/460	63	MQS-6322	74	1.26-1.14/.57	17.6	242	63B14SS	63B5SS	68, B3
	3600	575	63	MPS-6322	74	0.456	17.6	242	63B14SS	63B5SS	B3
	1800	208-230/460	71	MQS-7114	77	1.26-1.14/.57	18.7	311	71B14SS	71B5SS	68, B3
	1800	575	71	MPS-7114	77	0.456	18.7	311	71B14SS	71B5SS	B3
	1200	208-230/460	71	MQS-7126	67	1.59-1.44/.72	25.3	311	71B14SS	71B5SS	68, B3
	1200	575	71	MPS-7126	67	0.576	25.3	311	71B14SS	71B5SS	B3
0.5	3600	208-230/460	71	MQS-7112	80	1.71-1.55/.78	25.3	311	71B14SS	71B5SS	68, B3
	3600	575	71	MPS-7112	80	0.62	25.3	311	71B14SS	71B5SS	B3
	1800	208-230/460	71	MQS-7124	78	1.79-1.62/.81	23.1	250	71B14SS	71B5SS	68, B3
	1800	208-230/460	71	MQS-7124NVB14	78	1.79-1.62/.81	23.1	278	Included	N/A	68, B14
	1800	575	71	MPS-7124	78	0.648	23.1	250	71B14SS	71B5SS	B3
	1800	575	71	MPS-7124NVB14	78	0.648	23.1	278	Included	N/A	B14
	1200	208-230/460	80	MQS-8016	77	1.94-1.75/.88	38.5	325	80B14SS	80B5SS	68, B3
	1200	575	80	MPS-8016	77	0.7	38.5	325	80B14SS	80B5SS	B3
0.75	3600	208-230/460	71	MQS-7122	80	2.29-2.075/1.04	28.6	311	71B14SS	71B5SS	68, B3
	3600	575	71	MPS-7122	80	0.83	28.6	311	71B14SS	71B5SS	B3
	1800	208-230/460	80	MQS-8014	79	2.48-2.24/1.12	38.5	325	80B14SS	80B5SS	68, B3
	1800	208-230/460	80	MQS-8014NVB14	79	2.48-2.24/1.12	38.5	322	Included	N/A	68, B14
	1800	575	80	MPS-8014	79	0.896	38.5	325	80B14SS	80B5SS	B3
	1800	575	80	MPS-8014NVB14	79	0.896	38.5	322	Included	N/A	B14
1	3600	208-230/460	80	MQS-8012-S3	81	2.96-2.68/1.34	34.1	322	80B14SS	80B5SS	68, B3
	3600	575	80	MPS-8012-S3	81	1 072	34.1	322	80B14SS	80B5SS	B3
	1800	208-230/460	80	MQS-8024-S3	85.5	3.14-2.84/1.42	44	322	80B14SS	80B5SS	68, B3
	1800	575	80	MPS-8024-S3	85.5	1 136	44	322	80B14SS	80B5SS	B3
	1800	208-230/460	80	MQS-8024S3NVB14	85.5	3.14-2.84/1.42	44	322	Included	N/A	68, B14
	1800	208-230/460	80	MQS-8024S3NVB34	85.5	3.14-2.84/1.42	44	322	Included	N/A	68, B34
	1800	575	80	MPS-8024S3NVB14	85.5	1 136	44	322	Included	N/A	B14
	1200	208-230/460	90	MQS-90S6FC-S3	82.5	4.64-4.2/2.1	44	369	90B14SS	90B5SS	68, B3
	1200	575	80	MPS-90S6FC-S3	82.5	1.68	44	369	90B14SS	90B5SS	B3

Footnotes:

* **68 =** Rated and Nameplated 60/50 Hertz
* **B3 =** Rigid Base, no Flange
* **B14 =** Round Body, B14 Flange Installed
* **B34 =** Rigid Base, B14 Flange installed

CHART CONTINUES ON NEXT PAGE

CHART CONTINUED FROM PREVIOUS PAGE

HP	RPM	VOLTS	FRAME	CAT NO.	NOM EFF.	F.L. AMPS	WT (Lbs)	"L" Dimension (mm)	B14 FLANGE	B5 FLANGE	FOOT NOTES
1.5	3600	208-230/460	80	MQS-8022FC-S3	85	3.98-3.6/1.8	39.6	361	80B14SS	80B5SS	68, B3
	3600	575	80	MPS-8022FC-S3	85	1.44	39.6	361	80B14SS	80B5SS	B3
	3600	208-230/460	90	MQS-90S4FC-S3	86.5	4.74-4.29/2.145	48.4	369	90B14SS	90B5SS	68, B3
	3600	575	90	MPS-90S4FC-S3	86.5	1 716	48.4	369	90B14SS	90B5SS	B3
	1200	208-230/460	90	MQS-90L6FC-S3	87.5	5.31-4.8/2.4	57.2	414	90B14SS	90B5SS	68, B3
	1200	575	90	MPS-90L6FC-S3	87.5	1.92	57.2	414	90B14SS	90B5SS	B3
2	3600	208-230/460	90	MQS-90S2FC-S3	85.5	5.64-5.1/2.55	48.4	369	90B14SS	90B5SS	68, B3
	3600	575	90	MPS-90S2FC-S3	85.5	2.04	48.4	369	90B14SS	90B5SS	B3
	1800	208-230/460	90	MQS-90L4FC-S3	86.5	6.44-5.82/2.91	59.4	414	90B14SS	90B5SS	68, B3
	1800	575	90	MPS-90L4FC-S3	86.5	2 328	59.4	414	90B14SS	90B5SS	B3
	1200	208-230/460	100	MQS-100L6FC-S3	88.5	6.41-5.8/2.7	83.6	433	100B14SS	100B5SS	68, B3
	1200	575	100	MPS-100L6FC-S3	88.5	2.16	83.6	433	100B14SS	100B5SS	B3
3	3600	208-230/460	90	MQS-90L2FC-S3	86.5	7.96-7.2/3.6	64.9	414	90B14SS	90B5SS	68, B3
	3600	575	90	MPS-90L2FC-S3	86.5	2.88	64.9	414	90B14SS	90B5SS	B3
	1800	208-230/460	100	MQS-100L14FC-S3	89.5	7.96-7.2/3.6	74.8	433	100B14SS	100B5SS	68, B3
	1800	575	100	MPS-100L14FC-S3	89.5	2.88	74.8	433	100B14SS	100B5SS	B3
	1200	208-230/460	112	MQS-112M6FC-S3	89.5	9.29-8.4/4.2	111.1	469	112B14SS	112B5SS	68, B3
	1200	575	112	MPS-112M6FC-S3	89.5	3.36	111.1	469	112B14SS	112B5SS	B3
4	3600	208-230/460	100	MQS-100L2FC-S3	88.5	10.73-9.7/4.85	81.4	433	100B14SS	100B5SS	68, B3
	3600	575	100	MPS-100L2FC-S3	88.5	3.88	81.4	433	100B14SS	100B5SS	B3
	1800	208-230/460	100	MQS-100L24FC-S3	89.5	11.01-9.96/4.98	92.4	433	100B14SS	100B5SS	68, B3
	1800	575	100	MPS-100L24FC-S3	89.5	3 984	92.4	433	100B14SS	100B5SS	B3
5.5	3600	208-230/460	112	MQS-112M2FC-S3	88.5	14.22-12.86/6.43	99	469	112B14SS	112B5SS	68, B3
	3600	575	112	MPS-112M2FC-S3	88.5	5 144	99	469	112B14SS	112B5SS	B3
	1800	208-230/460	112	MQS-112M4FC-S3	89.5	14.6-13.2/6.6	111.1	469	112B14SS	112B5SS	68, B3
	1800	575	112	MPS-112M4FC-S3	89.5	5.28	111.1	469	112B14SS	112B5SS	B3
7.5	3600	208-230/460	132	MQS-132S12FC-S3	89.5	20.5-18.54/9.27	145.2	524	132B14SS	132B5SS	68, B3
	3600	575	132	MPS-132S12FC-S3	89.5	7 416	145.2	524	132B14SS	132B5SS	B3
	1800	208-230/460	132	MQS-132S4FC-S3	91.7	19.9-18/9	173.8	524	132B14SS	132B5SS	68, B3
	1800	575	132	MPS-132S4FC-S3	91.7	7.2	173.8	524	132B14SS	132B5SS	B3
10	3600	208-230/460	132	MQS-132S22FC-S3	90.2	26.23-23.72/11.86	171.6	524	132B14SS	132B5SS	68, B3
	3600	575	132	MPS-132S22FC-S3	90.2	9 488	171.6	524	132B14SS	132B5SS	B3
	1800	208-230/460	132	MQS-132M4FC-S3	91.7	26.1-23.6/11.8	200.2	564	132B14SS	132B5SS	68, B3
	1800	575	132	MPS-132M4FC-S3	91.7	9.44	200.2	564	132B14SS	132B5SS	B3

Footnotes:

* **68 =** Rated and Nameplated 60/50 Hertz
* **B3 =** Rigid Base, no Flange
* **B14 =** Round Body, B14 Flange Installed
* **B34 =** Rigid Base, B14 Flange installed

FAN and BLOWER MOTOR DIRECT DRIVE PSC

HEAVY GAUGE ROLLED STEEL CONSTRUCTION

OPEN AIR OVER DESIGN FLEX MOUNT MOTORS

Features:

- Open Frames and Brackets
- Multi-speed Capacity
- Weather Resistant Reversing Plug
- 30” Long Leads
- Automatic Reset Thermal Protector
- Ball Bearings
- UL reconized and CSA Certified
- Capacitor Included
- Shaft 1/2” X 6”

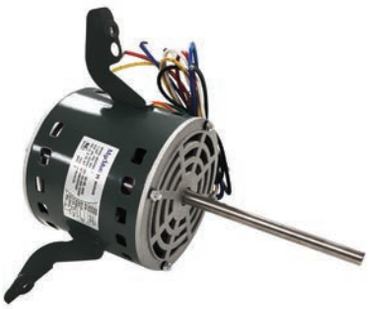

HP	RPM	VOLTS	FRAME	CAT NO.	S.F	F.L. AMPS	WT (Lbs)	"C" DIMENSION (Inch)
0.25	1075/4	115	48Y	MDD146/4SP	1.0	14	14	4.25
0.33	1075/4	115	48Y	MDD136/4SP	1.0	15	15	4.5
0.50	1075/4	115	48Y	MDD126/4SP	1.0	18	18	5

FARM DUTY PSC MOTOR

TEAO TOTALLY ENCLOSED AIR OVER DESIGN

VARIABLE SPEEDS | VARIABLE SPEED CONTROLLED 1 PHASE INPUT

Features:

- Ball Bearings
- Continuous Duty
- Extended Thru-Bolts
- Automatic Reset Thermal Overload
- Full Gasketed
- 1/2” x 2-1/2” Long Shaft with Two Flats, 90 Degree Apart
- UL reconized and CSA Certified

HP	RPM	VOLTS	FRAME	CAT NO.	S.F	F.L. AMPS	WT (Lbs)	"C" DIMENSION (Inch)
0.33	1625	115/230	48YZ	MVS-134SB	1.0	3.8/1.9	22.15	11.81
0.50	1625	115/230	48YZ	MVS-124SB	1.0	5.4/2.7	24.4	11.81

DC PERMANENT MAGNET MOTOR

HEAVY GAUGE ROLLED STEEL CONSTRUCTION | TENV TOTALLY NON-VENTILATED & TEFC TOTALLY ENCLOSED FAN COOLED SCR RATED, 90VDC, 180VDC

Features:

- Class F Insulation
- IP45 Rated
- NEMA C-Face with Removable Base
- Highest Quality Permanent Magnets for High Starting Torque and Increased Efficiency
- Permanently Lubricated Sealed Ball Bearings
- Linear Speed/Torque Throughout Speed Range 20:1 CT
- ROHS Compliant
- UL Recognized and CSA Certified

HP	RPM	ARMATURE DC VOLTS	FRAME	CAT NO.	ENCLOSURE	F.L. AMPS	WT (Lbs)	"C" DIMENSION (Inch)	TORQUE (IN.LBS)
0.25	1750	90	56C	MM2590NV	TENV	2.05	21	8	9
	1750	90	56C	MM2590FC	TEFC	2.05	21	9.6	9
	1750	180	56C	MM2518NV	TENV	2.55	21	8	9
	1750	180	56C	MM2518FC	TEFC	2.55	21	9.6	9
0.33	1750	90	56C	MM3390NV	TENV	5.1	23	8	13.5
	1750	90	56C	MM3390FC	TEFC	5.1	23	9.6	13.5
	1750	180	56C	MM3318NV	TENV	2.55	23	8	13.5
	1750	180	56C	MM3318FC	TEFC	2.55	23	9.6	13.5
0.5	1750	90	56C	MM5090NV	TENV	6.28	25	8.88	18
	1750	90	56C	MM5090FC	TEFC	6.28	25	10.4	18
	1750	180	56C	MM5018NV	TENV	3.14	25	8.88	18
	1750	180	56C	MM5018FC	TEFC	3.14	25	10.4	18
0.75	1750	90	56C	MM7590FC	TEFC	9.82	30	11.45	27
	1750	180	56C	MM7518FC	TEFC	4.9	30	11.45	27
1	1750	90	56C	MM1090FC	TEFC	12.7	33	12.24	36
	1750	180	56C	MM1018FC	TEFC	6.4	33	12.24	36
1.5	1750	180	56C	MM1518FC-56C	TEFC	7.86	45	14.39	54
	1750	180	145TC	MM1518FC	TEFC	7.86	45	13.8	54
2	1750	180	56C	MM2018FC-56C	TEFC	10.4	55	10.77	72
	1750	180	145TC	MM2018FC	TEFC	10.77	55	14.8	72
3	1750	180	145TC	MM3018FC	TEFC	18.6	70	16.9	108

LOW VOLTAGE DC PERMANENT MAGNET MOTOR

HEAVY GAUGE ROLLED STEEL CONSTRUCTION | TENV TOTALLY NON-VENTILATED & TEFC TOTALLY ENCLOSED FAN COOLED SCR RATED, 12, 24, 48VDC

Features:

- Class F Insulation
- IP45 Rated
- NEMA C-Face with Removable Base
- Highest Quality Permanent Magnets for High Starting Torque and Increased Efficiency
- Permanently Lubricated Sealed Ball Bearings
- Linear Speed/Torque Throughout Speed Range 20:1 CT
- ROHS Compliant
- UL Recognized and CSA Certified

HP	RPM	ARMATURE DC VOLTS	FRAME	CAT NO.	ENCLOSURE	F.L. AMPS	WT (Lbs)	"C" DIMENSION (Inch)	TORQUE (IN.LBS)
0.25	1750	12	56C	MM2512NV	TENV	30.9	21	8	9
	1750	12	56C	MM2512FC	TEFC	30.9	21	10.4	9
	1750	24	56C	MM2524FC	TEFC	15.46	21	8	9
	1750	48	56C	MM2548FC	TEFC	7.73	21	10.4	9
0.33	1750	12	56C	MM3312NV	TENV	38.3	23	8	11.9
	1750	12	56C	MM3312FC	TEFC	38.3	23	10.4	11.9
	1750	24	56C	MM3324FC	TEFC	19.1	23	10.4	11.9
	1750	48	56C	MM3348FC	TEFC	9.56	23	10.4	11.9
0.5	1750	12	56C	MM5012NV	TENV	47.16	25	8.88	18
	1750	12	56C	MM5012FC	TEFC	47.12	25	10.4	18
	1750	24	56C	MM5024FC	TEFC	23.56	25	10.4	18
	1750	48	56C	MM5048FC	TEFC	11.78	25	10.4	18
0.75	1750	12	56C	MM7512FC	TEFC	73.6	30	11.45	27
	1750	24	56C	MM7524FC	TEFC	31.8	30	11.45	27
1	1750	12	56C	MM1012FC	TEFC	95.4	32	12.24	36
	1750	24	56C	MM1024FC	TEFC	47.7	32	12.24	36

RIGHT ANGLE SPEED REDUCER

ALUMINUM CONSTRUCTION

Features:

- Aluminum alloy Housing with heat sink design
- Two bearings on Input shaft
- NEMA 56C Input
- Double Lip Seals
- O Rings on input and output covers
- Hardened worm shaft
- Permanently sealed with Synthetic lubrication
- See Accessories page for Single and Double Output shafts, Torque arm and Flanges.

MODEL	RATIO	OUTPUT RPM	OUTPUT TORQUE In.Lbs	MAX HP INPUT @ 1750RPM	MAX OHL Lbs	BORE SIZE	SINGLE O.P SHAFT	DOUBLE O.P SHAFT	TORQUE ARM	OUTPUT FLANGE
MMR50-5-56C	5	350	549	3.43	322	1.000″	MMR50-SS	MMR50-DS	MMR50-ARM	MMR50-FLANGE
MMR50-7.5-56C	7.5	23	638	2.64	369	1.000″	MMR50-SS	MMR50-DS	MMR50-ARM	MMR50-FLANGE
MMR50-10-56C	10	175	637	2.06	406	1.000″	MMR50-SS	MMR50-DS	MMR50-ARM	MMR50-FLANGE
MMR50-15-56C	15	117	655	1.48	464	1.000″	MMR50-SS	MMR50-DS	MMR50-ARM	MMR50-FLANGE
MMR50-20-56C	20	88	646	1.14	510	1.000″	MMR50-SS	MMR50-DS	MMR50-ARM	MMR50-FLANGE
MMR50-25-56C	25	70	619	.90	551	1.000″	MMR50-SS	MMR50-DS	MMR50-ARM	MMR50-FLANGE
MMR50-30-56C	30	58	743	.96	586	1.000″	MMR50-SS	MMR50-DS	MMR50-ARM	MMR50-FLANGE
MMR50-40-56C	40	44	672	.70	643	1.000″	MMR50-SS	MMR50-DS	MMR50-ARM	MMR50-FLANGE
MMR50-50-56C	50	35	646	.57	694	1.000″	MMR50-SS	MMR50-DS	MMR50-ARM	MMR50-FLANGE
MMR50-60-56C	60	29	602	.47	739	1.000″	MMR50-SS	MMR50-DS	MMR50-ARM	MMR50-FLANGE
MMR50-80-56C	80	22	575	.38	810	1.000″	MMR50-SS	MMR50-DS	MMR50-ARM	MMR50-FLANGE
MMR50-100-56C	100	18	487	.28	866	1.000″	MMR50-SS	MMR50-DS	MMR50-ARM	MMR50-FLANGE
MMR63-7.5-56C	7.5	233	1133	4.77	463	1.000″	MMR63-SS	MMR63-DS	MMR63-ARM	MMR63-FLANGE
MMR63-10-56C	10	175	1150	3.67	510	1.000″	MMR63-SS	MMR63-DS	MMR63-ARM	MMR63-FLANGE
MMR63-15-56C	15	117	1239	2.76	583	1.000″	MMR63-SS	MMR63-DS	MMR63-ARM	MMR63-FLANGE
MMR63-20-56C	20	88	1194	2.05	641	1.000″	MMR63-SS	MMR63-DS	MMR63-ARM	MMR63-FLANGE
MMR63-25-56C	25	70	1150	1.64	692	1.000″	MMR63-SS	MMR63-DS	MMR63-ARM	MMR63-FLANGE
MMR63-30-56C	30	58	1416	1.77	736	1.000″	MMR63-SS	MMR63-DS	MMR63-ARM	MMR63-FLANGE
MMR63-40-56C	40	44	1283	1.27	807	1.000″	MMR63-SS	MMR63-DS	MMR63-ARM	MMR63-FLANGE
MMR63-50-56C	50	35	1194	1.01	871	1.000″	MMR63-SS	MMR63-DS	MMR63-ARM	MMR63-FLANGE
MMR63-60-56C	60	29	1150	.86	928	1.000″	MMR63-SS	MMR63-DS	MMR63-ARM	MMR63-FLANGE
MMR63-80-56C	80	22	1079	.66	1017	1.000″	MMR63-SS	MMR63-DS	MMR63-ARM	MMR63-FLANGE
MMR63-100-56C	100	15	1044	.57	1088	1.000″	MMR63-SS	MMR63-DS	MMR63-ARM	MMR63-FLANGE
MMR75-50-56C	50	35	1880	1.47	1093	1.250″	MMR75-SS	MMR75-DS	MMR75-ARM	MMR75-FLANGE
MMR75-60-56C	60	29	1778	1.22	1162	1.250″	MMR75-SS	MMR75-DS	MMR75-ARM	MMR75-FLANGE
MMR75-80-56C	80	22	1632	.91	1279	1.250″	MMR75-SS	MMR75-DS	MMR75-ARM	MMR75-FLANGE
MMR75-100-56C	100	18	1517	.94	1378	1.250″	MMR75-SS	MMR75-DS	MMR75-ARM	MMR75-FLANGE
MMR90-80-56C	80	22	2396	1.27	1415	1.375″	MMR90-SS	MMR90-DS	MMR90-ARM	MMR90-FLANGE
MMR90-100-56C	100	18	2270	1.03	1524	1.375″	MMR90-SS	MMR90-DS	MMR90-ARM	MMR90-FLANGE

RIGHT ANGLE SPEED REDUCER

304 STAINLESS STEEL CONSTRUCTION

Features:

- 304 Stainless Steel construction
- Two bearings on Input shaft
- NEMA 56C Face Input
- Double Lip Viton Seals
- O Rings on input and output covers
- Hardened worm shaft
- Permanently sealed with Food Grade Oil
- 140TC come's with 5/8" Stainless Reduction Bushing

MODEL	RATIO	OUTPUT RPM	OUTPUT TORQUE In.Lbs	MAX INPUT HP @ 1750RPM	MAX OHL Lbs	BORE SIZE	SINGLE O.P SHAFT	DOUBLE O.P SHAFT	TORQUE ARM
MRS50-5-56C	5	350	549	3.43	322	1.000"	MRS50-SS-SS	MRS50-DS-SS	MRS50-ARM
MRS50-7.5-56C	7.5	23	638	2.64	369	1.000"	MRS50-SS-SS	MRS50-DS-SS	MRS50-ARM
MRS50-10-56C	10	175	637	2.06	406	1.000"	MRS50-SS-SS	MRS50-DS-SS	MRS50-ARM
MRS50-15-56C	15	117	655	1.48	464	1.000"	MRS50-SS-SS	MRS50-DS-SS	MRS50-ARM
MRS50-20-56C	20	88	646	1.14	510	1.000"	MRS50-SS-SS	MRS50-DS-SS	MRS50-ARM
MRS50-25-56C	25	70	619	.90	551	1.000"	MRS50-SS-SS	MRS50-DS-SS	MRS50-ARM
MRS50-30-56C	30	58	743	.96	586	1.000"	MRS50-SS-SS	MRS50-DS-SS	MRS50-ARM
MRS50-40-56C	40	44	672	.70	643	1.000"	MRS50-SS-SS	MRS50-DS-SS	MRS50-ARM
MRS50M-40-56C	40	44	672	.70	643	25MM	N/A	N/A	MRS50-ARM
MRS50-50-56C	50	35	646	.57	694	1.000"	MRS50-SS-SS	MRS50-DS-SS	MRS50-ARM
MRS50-60-56C	60	29	602	.47	739	1.000"	MRS50-SS-SS	MRS50-DS-SS	MRS50-ARM
MRS50M-60-56C	60	29	602	.47	739	25MM	N/A	N/A	MRS50-ARM
MRS50-80-56C	80	22	575	.38	810	1.000"	MRS50-SS-SS	MRS50-DS-SS	MRS50-ARM
MRS50-100-56C	100	18	487	.28	866	1.000"	MRS50-SS-SS	MRS50-DS-SS	MRS50-ARM
MRS63-7.5-56C	7.5	233	1133	4.77	463	1.000"	MRS63-SS-SS	MRS63-DS-SS	MRS63-ARM
MRS63-10-56C	10	175	1150	3.67	510	1.000"	MRS63-SS-SS	MRS63-DS-SS	MRS63-ARM
MRS63-15-56C	15	117	1239	2.76	583	1.000"	MRS63-SS-SS	MRS63-DS-SS	MRS63-ARM
MRS63-20-56C	20	88	1194	2.05	641	1.000"	MRS63-SS-SS	MRS63-DS-SS	MRS63-ARM
MRS63-25-56C	25	70	1150	1.64	692	1.000"	MRS63-SS-SS	MRS63-DS-SS	MRS63-ARM
MRS63-30-56C	30	58	1416	1.77	736	1.000"	MRS63-SS-SS	MRS63-DS-SS	MRS63-ARM
MRS63-40-56C	40	44	1283	1.27	807	1.000"	MRS63-SS-SS	MRS63-DS-SS	MRS63-ARM
MRS63M-40-56C	40	44	1283	1.27	807	25MM	N/A	N/A	MRS63-ARM
MRS63-50-56C	50	35	1194	1.01	871	1.000"	MRS63-SS-SS	MRS63-DS-SS	MRS63-ARM
MRS63-60-56C	60	29	1150	.86	928	1.000"	MRS63-SS-SS	MRS63-DS-SS	MRS63-ARM
MRS63M-60-56C	60	29	1150	.86	928	25MM	N/A	N/A	MRS63-ARM
MRS63-80-56C	80	22	1079	.66	1017	1.000"	MRS63-SS-SS	MRS63-DS-SS	MRS63-ARM
MRS63-100-56C	100	15	1044	.57	1088	1.000"	MRS63-SS-SS	MRS63-DS-SS	MRS63-ARM
MRS75-7.5-180TC	7.5	233	1555	6.44	581	1.250"	MRS75-SS-SS	MRS75-DS-SS	MRS75-ARM
MRS75-10-180TC	10	175	1656	5.20	639	1.250"	MRS75-SS-SS	MRS75-DS-SS	MRS75-ARM
MRS75-15-180TC	15	117	1900	4.07	732	1.250"	MRS75-SS-SS	MRS75-DS-SS	MRS75-ARM
MRS75-20-140TC	20	88	1953	3.24	806	1.250"	MRS75-SS-SS	MRS75-DS-SS	MRS75-ARM
MRS75-25-140TC	25	70	1784	2.43	868	1.250"	MRS75-SS-SS	MRS75-DS-SS	MRS75-ARM
MRS75-30-140TC	30	58	2027	2.41	922	1.250"	MRS75-SS-SS	MRS75-DS-SS	MRS75-ARM
MRS75-40-56C	40	44	2029	1.90	1015	1.250"	MRS75-SS-SS	MRS75-DS-SS	MRS75-ARM
MRS75-50-56C	50	35	1880	1.47	1093	1.250"	MRS75-SS-SS	MRS75-DS-SS	MRS75-ARM
MRS75-60-56C	60	29	1778	1.22	1162	1.250"	MRS75-SS-SS	MRS75-DS-SS	MRS75-ARM
MRS75-80-56C	80	22	1632	.91	1279	1.250"	MRS75-SS-SS	MRS75-DS-SS	MRS75-ARM
MRS75-100-56C	100	15	1517	0.74	1378	1.250"	MRS75-SS-SS	MRS75-DS-SS	MRS75-ARM

SINGLE ADJUSTMENT SLIDE BASES

FRAME	CATALOGUE
56	56W
143T	143W
145T	145W

SINGLE ADJUSTMENT SLIDE BASES

FRAME	STANDARD DUTY CAT NO.	HEAVY DUTY CAT NO.
182T	182B2W	182A2HD
184T	184B2W	184A2HD
213T	213B2W	213A2HD
215T	215B2W	215A2HD
254T	254B2W	254C2HD
256T	256B2W	256C2HD
284T	284B2W	284C2HD
286T	286B2W	286C2HD
324T	324B2W	324C2HD
326T	326B2W	326C2HD
364T	364B2W	364C2HD
365T	365B2W	365C2HD
404T	404B2W	404C2HD
405T	405B2W	405C2HD
444T	444B2W	444C2HD
445T	445B2W	445C2HD
447T	447B2W	447C2HD
449T	449B2W	449C2HD
504T	504B2W	N/A
505T	505B2W	N/A

TRANSITION BASES

CONVERTS FROM	CONVERTS TO	CATALOGUE
182/184	143T/145T	1814T
213/215	182T/184T	2118T
254U/256U	213T/215T	25U21T
284U/286U	254T/256T	28U25T
324U/326U	284T/286T	32U28T
364U/365U	324T/326T	36U32T
404/405U	364T/365T	40U36T
444U/445U	364T/365T	44U36T
444U/445U	404/405T	44U40T

Useful formulas

HP VS KW

1HP=0.746KW
1KW=1.34HP

OHMS

Ohms = Volts ÷ Amperes
Amperes = Volts ÷ Ohms
Volts = Amperes x Ohms

POWER– A.C. CIRCUITS

Power Factor = Watts ÷ (Volts x Amperes)
Three Phase Kilowatts = (Volts x Amperes x Power Factor x 1.732) ÷ 1000
Three Phase Volt-Amperes = Volts x Amperes x 1.732
Three Phase Amperes = (746 x Horsepower) ÷ (1.732 x Volts x Efficiency x Power Factor)
Single Phase Kilowatts = (Volts x Amperes x Power Factor) ÷ 1000
Single Phase Amperes = (746 x Horsepower) ÷ (Volts x Efficiency x Power Factor)

POWER – D.C. CIRCUITS

Watts = Volts x Amperes
Amperes = Watts ÷ Volts
Horsepower = (Volts x Amperes x Efficiency) ÷ 746

MOTORS FORMULAS

Torque (lbs.-ft.) = (Horsepower x 5250) ÷ RPM
Shaft Stress (lbs. per sq. inch) = (Horsepower x 321000) ÷ (RPM x Shaft Diam3)

PUMPS

Horsepower = (GPM x Head in Feet x Specific Gravity) ÷ (3960 x Efficiency of Pump)

VENTILATION

Horsepower = (CFM x Pressure (lbs. per sq. ft.)) ÷ (33000 x Efficiency)

SPEED

Synchronous RPM = (Hertz x 120) ÷ Poles
Percent Slip = (Synchronous RPM – Full Load RPM) ÷ Synchronous RPM x 100

IP RATING CHART

Protection provided by enclosures for electrical equipment is indicated by the IP Code.

The first numeral indicates protection of persons against access to hazardous parts, and protection of equipment against ingress of solid foreign objects.

No Protection **0**

Protection of the back of the hand against accidental access to hazardous parts, and protection of equipment against objects larger than 50mm. **1**

Protection of fingers against access to hazardous parts, and protection of equipment against objects larger than 12.5mm. **2**

Protection of persons holding tools or wires (larger than 2.5mm diameter), and protection of equipment against objects larger than 2.5mm. **3**

Protection of persons holding small tools or wires (larger than 1mm diameter), and protection of equipment against objects larger than 1mm. **4**

Protection against entry dust in sufficient quantity to interfere with satisfactory operation of equipment. **5**

Complete protection against entry of dust. **6**

The second numeral indicates protection of equipment against harmful ingress of water.

No Protection **0**

Protection against drops of water falling vertically. **1**

Protection against drops of water falling vertically when object is tilted up to 15ft from its normal position (in any direction). **2**

Protection against spraying water at up to 60ft from the vertical. **3**

Protection against splashing and spraying water from all practicable directions. **4**

Protection against low pressure jets of water from all practicable directions. **5**

Protection against heavy seas or strong jets of water from all practicable directions. **6**

Protection against temporary immersion. **7**

Protection against continuous submersion (tests subject to agreement, but no less severe than second numeral 7). **8**

Protection from close-range, powerful, high temperature water jets. **9K**

Since 2001, MEP has developed a comprehensive range of products to meet the various needs of their customers and their unique applications.

Max Motion delivers industry leading features at competitive prices.

MEP INC

Ontario, Western Canada, Newfoundland, Labrador and USA
2831 Bristol Circle Unit 3
Oakville, ON L6H 6X5
Tel:905-829-1020
Toll free: 877-812-7788
Email: information@mep.ca

Quebec and Maritimes
10500 Boul. du Golf
Anjou, QC H1J 2Y7
Tel: 514-352-1229
Toll free: 888-668-3877
Email: info@mep.ca

MEP 1982

www.mep.ca